barrell
TREE CONSULTANCY

Manual for managing trees on development sites

v3.0

© Barrell Tree Consultancy 2020

© Barrell Tree Consultancy 2020

Introduction and index

This manual is a compilation of individual Site Guidance Notes (SGNs) created to help manage trees effectively on development sites. Each SGN deals with a specific issue that can arise during development and is structured into three main sections; a concise summary at the beginning in the form of a bulleted list for operatives carrying out the work; further explanations and photographic examples to supplement the bulleted list; and, a summary of the published technical reference guidance.

This general guidance is intended to supplement, not substitute, detailed specifications for work, providing a broad overview of key considerations to be applied to any work near retained trees.

This document is only a summary of its subject matter. You should not rely on this general guidance in isolation, and you should always seek detailed advice from an appropriate expert in relation to specific circumstances before any action is taken or refrained from.

SGN 1	Monitoring tree protection	4
SGN 2	Fencing protected trees	9
SGN 3	Ground protection	18
SGN 4	Pollution control	27
SGN 5	Site cranes and piling rigs	34
SGN 6	Height restrictions	40
SGN 7	Excavation in root protection areas	44
SGN 8	Removing surfacing and structures in root protection areas	54
SGN 9	Installing/upgrading surfacing in root protection areas	60
SGN 10	Installing structures in root protection areas	75
SGN 11	Installing services in root protection areas	89
SGN 12	Landscaping in root protection areas	96

© Barrell Tree Consultancy 2020

Monitoring tree protection

This document is only a summary of its subject matter. You should not rely on this general guidance in isolation, and you should always seek detailed advice from an appropriate expert in relation to specific circumstances before any action is taken or refrained from. You may download and republish (in its full format) and print copies of the guidance – but you must not adapt any guidance.

© Barrell Tree Consultancy 2020

SGN 1

Summary guidance for site operatives

Monitoring tree protection

Administration

- Unauthorised damage to protected trees is a criminal offence and could lead to enforcement action.

- Carry out supervision under the normal site risk assessment procedures and comply with the wider site safety rules.

Monitoring framework

- Appoint a supervising arboriculturist to monitor tree protection.

- The supervising arboriculturist, a developer's representative, and a local planning authority (LPA) representative, will attend a pre-commencement meeting before construction work starts.

- The supervising arboriculturist will visit to check the tree protection.

- Additionally, the supervising arboriculturist will visit, as necessary, to advise on emerging tree protection issues.

- Circulate written records of monitoring to relevant parties.

Important reminders

- The locations of fencing and ground protection, and precautionary areas, will not be altered without prior approval of the supervising arboriculturist.

- Fencing and ground protection will not be removed at the end of construction without prior approval of the supervising arboriculturist.

© Barrell Tree Consultancy 2020

SGN

1

Explanatory notes and examples

Monitoring tree protection

Purpose

SGN 1 describes the practical requirements for monitoring tree protection throughout the construction process, based on the recommendations in *BS 5837 (6.1, 6.2, and 6.3*).

General principles and clarifications

A pre-commencement meeting will be held on site before any of the site clearance and construction work begins. This would normally be attended by the site manager, the supervising arboriculturist, and a LPA representative. If a LPA representative cannot attend, the supervising arboriculturist will inform the LPA in writing of the details of the meeting.

All tree protection measures described in the arboricultural method statement will be fully discussed so that their implementation and sequencing are understood by all the parties. This will include agreeing the form and location of the most appropriate combination of fencing and ground protection to be used as barriers for the construction exclusion zone.

Any agreed clarifications or modifications to the consented details will be recorded and circulated to all parties in writing. This meeting is where the details of the programme of tree protection will be agreed and finalised, which will then form

© Barrell Tree Consultancy 2020

Explanatory notes and examples

Monitoring tree protection

the basis of any supervision arrangements between the supervising arboriculturist and the developer.

Once the site is active, the supervising arboriculturist will visit at an interval agreed at the pre-commencement site meeting. This would normally be every two to four weeks for general supervision, but could be at a longer interval, if agreed between the parties. The supervision arrangement will be sufficiently flexible to allow the supervision of all sensitive works as they occur. The supervising arboriculturist's initial role is to liaise with the developer and the LPA to ensure that protective measures are fit for purpose and in place before any works start on site. Once the site is working, that role will switch to monitoring compliance with arboricultural planning conditions and advising on any tree problems that arise or modifications that become necessary.

No agreed protective fencing or ground protection will be altered or removed without prior approval of the supervising arboriculturist. This particularly applies to removal at the end of the construction activity and the final landscaping because there is a high risk of inadvertent harm to trees during these finishing stages.

© Barrell Tree Consultancy 2020

Technical references

Monitoring tree protection

Due to copyright restrictions, the relevant British Standard clauses are summarised, not quoted, as follows:

1. ***BS 5837 (2012) Trees in relation to design, demolition and construction – Recommendations:*** Clauses 6.1 (Arboricultural method statement), 6.2 (Barriers and ground protection), and 6.3 (Site monitoring), recommend:

   - 6.1.1 Adopt a precautionary approach towards tree protection and describe operations within RPAs in an arboricultural method statement to demonstrate that there is a minimal risk of adverse impact on trees.

   - 6.1.2 The arboricultural method statement should include an auditable system of arboricultural site monitoring, including a schedule of specific site events requiring input or supervision.

   - 6.2.1.3 The protected area is sacrosanct. Fencing and ground protection should not be removed or altered unless agreed by the supervising arboriculturist.

   - 6.3 There should be an auditable system of site monitoring for trees to be retained, which should extend to arboricultural supervision whenever construction activity could affect RPAs.

© Barrell Tree Consultancy 2020

Fencing protected trees

SGN 2

This document is only a summary of its subject matter. You should not rely on this general guidance in isolation, and you should always seek detailed advice from an appropriate expert in relation to specific circumstances before any action is taken or refrained from. You may download and republish (in its full format) and print copies of the guidance – but you must not adapt any guidance.

© Barrell Tree Consultancy 2020

SGN

2

Summary guidance for site operatives

Fencing protected trees

Administration

- Unauthorised damage to protected trees is a criminal offence and could lead to enforcement action.
- Work under the normal site risk assessment procedures and comply with the wider site safety rules.
- Brief operatives entering root protection areas (RPAs) by the supervising arboriculturist before work starts.

Other relevant SGNs

- Monitor works in RPAs by the supervising arboriculturist (See *SGN 1 Monitoring tree protection*).

Important reminders

- Fencing will be fit for purpose, i.e. prevent unauthorised incursions and activities within RPAs.
- Fencing will be installed at the locations shown on the tree protection plan.
- Fencing locations will not be altered without prior approval of the supervising arboriculturist.
- Fencing will not be removed at the end of the construction activity without prior approval of the supervising arboriculturist.

© Barrell Tree Consultancy 2020

SGN

2

Explanatory notes and examples

Fencing protected trees

Purpose

SGN 2 describes where the temporary protective fencing will be installed, what form it can take and how long it should remain in place to effectively protect the RPAs of trees to be retained, based on the recommendations in *BS 5837 (6.2 and 7.3)*.

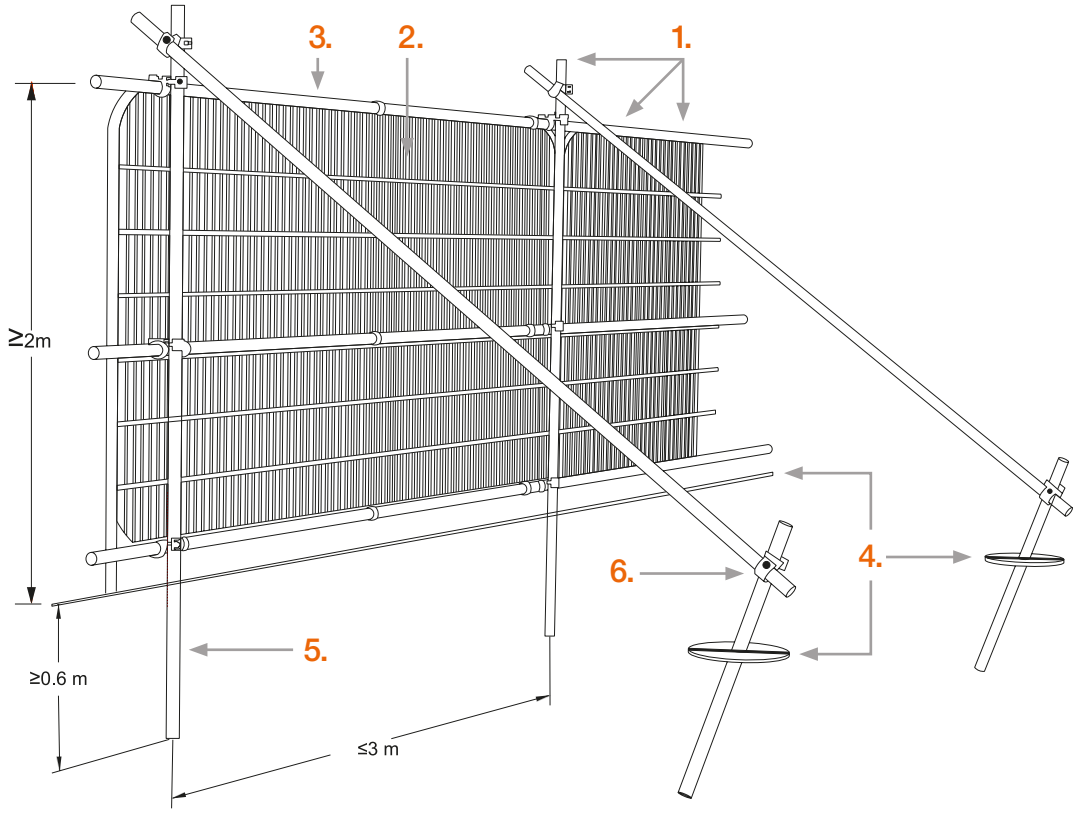

1. Standard scaffold poles
2. Heavy gauge 2m tall galvanised tube and welded mesh infill panels
3. Panels secured to uprights and cross-membranes with wire ties
4. Ground level
5. Uprights driven into the ground until secure (minimum 0.6m depth)
6. Standard scaffold clamps

SNG 2-01
Protective fencing recommendations taken from figure 2 of *BS 5837*.

© Barrell Tree Consultancy 2020

SGN 2

Explanatory notes and examples

Fencing protected trees

General principles and clarifications

The fencing will be installed at the locations shown on the tree protection plan and agreed by the local planning authority before any construction activity starts on site. It will remain in place until there is no risk of harm from the development activity.

No fencing will be moved from its agreed location, removed, or temporarily dismantled, without consulting the supervising arboriculturist. Furthermore, the condition of the fencing will be regularly monitored by the supervising arboriculturist to ensure it remains fit for purpose, i.e. sufficient to prevent unauthorised access or activities within the RPAs of retained trees.

The minimum specification for the fencing will be as shown in figure 2 of *BS 5837*, or an equivalent design that effectively restricts access to the RPAs it protects. The precise form of the fencing can vary, provided it is fit for purpose. More specifically, behind the fencing, there will be no unauthorised vehicular access; no repeated pedestrian access; no fires; no storage of excavated debris, building materials, chemicals, or fuels; no mixing of cement; no service installation or excavation; no raising or lowering of soil levels; and no excessive cultivation for landscape planting.

Any variations to these restrictions will be agreed by the supervising arboriculturist.

SGN 2-02
Heras fencing wired to scaffold braced posts is a robust and effective interpretation of the BS specification.

© Barrell Tree Consultancy 2020

SGN 2

Explanatory notes and examples

Fencing protected trees

SGN 2-03
Board specification on secure wooden posts is a suitable alternative to the standard braced scaffold design.

SGN 2-04
Boards following the line of existing hard standing, enclosing the vulnerable RPA within the fencing.

SGN 2-05
An alternative to dug supports is concrete blocks set outside the RPA.

© Barrell Tree Consultancy 2020

SGN 2

Explanatory notes and examples

Fencing protected trees

SGN 2-06
Improvised use of drainage pipe wrapped around the trunk can provide an added layer of protection beneath a layer of plywood.

SGN 2-07
Boards attached to a supporting framework surrounding the trunk reduces the risk of accidental impact.

SGN 2-08
A wood frame around the trunk can be used to support a plywood surround.

© Barrell Tree Consultancy 2020

SGN

2

Explanatory notes and examples

Fencing protected trees

SGN 2-09
An innovative use of plywood and accommodation cabins to protect the trunk and roots of this retained tree.

SGN 2-10
Scaffold and boards can be installed around trees that have to be retained within working areas.

© Barrell Tree Consultancy 2020

SGN

2

Explanatory notes and examples

Fencing protected trees

SGN 2-11
Boxing in trunks provides effective protection, even in the tightest of situations, along with the retention of existing hard surfacing to protect the RPA.

SGN 2-12
If street trees could be harmed during development, they should also be protected even though they may be off site.

SGN 2-13
BS 5837 recommends warning signs are attached to fencing as a reminder of the restrictions within the RPA.

© Barrell Tree Consultancy 2020

Technical references

Due to copyright restrictions, the relevant British Standard clauses are summarised, not quoted, as follows:

1. ***BS 5837 (2012) Trees in relation to design, demolition and construction – Recommendations:*** Clauses 6.2 (Barriers and ground protection) and 7.3 (Tree protection during development) recommend:

   - 6.2.1.1 All retained trees should be protected by fencing and ground protection before any demolition, development, or soil stripping starts.

   - 6.2.1.3 The protected area is sacrosanct. Fencing and ground protection should not be removed or altered unless agreed by the supervising arboriculturist.

   - 6.2.1.5 The supervising arboriculturist should confirm that the tree protection has been installed as agreed before any significant site work starts.

   - 6.2.2.1 The tree protection should be fit for purpose, i.e. preventing inappropriate work in the RPAs of retained trees, and be maintained to remain rigid and complete.

   - 7.3.2 Where structures are to be removed from RPAs, fencing and ground protection should be installed up to the edge of the structure to protect the underlying soil.

© Barrell Tree Consultancy 2020

Ground protection

This document is only a summary of its subject matter. You should not rely on this general guidance in isolation, and you should always seek detailed advice from an appropriate expert in relation to specific circumstances before any action is taken or refrained from. You may download and republish (in its full format) and print copies of the guidance – but you must not adapt any guidance.

© Barrell Tree Consultancy 2020

SGN 3

Summary guidance for site operatives

Ground protection

Administration

- Unauthorised damage to protected trees is a criminal offence and could lead to enforcement action.
- Work under the normal site risk assessment procedures and comply with the wider site safety rules.
- Brief operatives entering root protection areas (RPAs) by the supervising arboriculturist before work starts.

Other relevant SGNs

- Monitor works in RPAs by the supervising arboriculturist (See *SGN 1 Monitoring tree protection*).

Important reminders

- Ground protection will be fit for purpose, i.e. prevent damage to the underlying soil and roots in RPAs.
- Ground protection will be installed at the locations shown on the tree protection plan.
- Ground protection locations will not be altered without prior approval of the supervising arboriculturist.
- Where feasible, retain existing hard standing to act as ground protection.
- Ground protection will not be removed at the end of construction without prior approval of the supervising arboriculturist.

© Barrell Tree Consultancy 2020

SGN

3

Explanatory notes and examples

Ground protection

Purpose

SGN 3 describes where ground protection will be installed, what form it can take, and how long it should remain in place to effectively protect trees to be retained, based on the recommendations in *BS 5837 (6.2 and 7.3)*.

General principles and clarifications

Ground protection is an effective means of preventing damage to the RPAs of retained trees during development activity. In practice, a range of approaches can be used, including retaining existing hard surfacing or structures that already protect the soil, installing new materials, or a combination of both. Whatever the chosen option, the result will be that the underlying soil (rooting environment) remains undisturbed and retains the capacity to support existing and new roots.

Ground protection will be installed at the locations shown on the tree protection plan and agreed by the local planning authority before any construction activity starts on site. It will remain in place until there is no risk of harm from the development activity. No ground protection will have its location changed or be removed without consulting the supervising arboriculturist. Furthermore, the condition of the ground protection will be regularly monitored to ensure it remains fit for purpose, i.e. sufficient to prevent damage to the RPAs of retained trees.

© Barrell Tree Consultancy 2020

SGN 3

Explanatory notes and examples

Ground protection

SGN 3-01
Metal plates and heavy plywood cover this entire area while the piles are being installed and the building is constructed above the RPA.

SGN 3-02
Heavy-duty plywood set onto a compressible woodchip layer and pinned into position is suitable to spread the loading from pedestrian access.

SGN 3-03
ArborRaft is very effective on flat areas to spread load and reduce compaction. Its main benefits over other cellular products are that there is no need to fill it with stone, which saves costs, and it is reusable. The UK supplier is Wrekin Products: wrekinproducts.com

© Barrell Tree Consultancy 2020

Explanatory notes and examples

SGN 3-04
Plywood fixed to a wood frame is another effective method of protecting soil from pedestrian compaction.

SGN 3-05
A scaffold framework attached to the main scaffold fencing can be used to support either scaffold planks or plywood to create an elevated platform with a gap beneath.

SGN 3-06
Cellular products are a very effective means of providing ground protection where heavy vehicle use is expected. Here, it is being used to temporarily widen an existing road, to be removed once the construction is finished.

© Barrell Tree Consultancy 2020

Explanatory notes and examples

Ground protection

SGN 3-07
Custom designed sectional metal tracks can be joined to support very heavy traffic use through sensitive areas.

SGN 3-08
Ground protection must be used where repeated pedestrian traffic could cause compaction in sensitive RPAs. It can be as simple as plywood, pinned to the ground, or custom designed plates that interlock to spread the load.

SGN 3-09
A combination of retaining existing surfacing and using temporary construction cabin accommodation can be a very effective means of preventing damage to sensitive areas.

© Barrell Tree Consultancy 2020

Explanatory notes and examples

Ground protection

SGN 3-10
Steel plates can be an effective way of temporarily reinforcing weak surfacing over a construction access during the development activity.

SGN 3-11
A temporary concrete slab cast directly over existing low load bearing surfacing is an effective way of ensuring that the soil beneath is protected from compaction during development. This is removed once the heavy use is finished.

SGN 3-12
Temporary concrete slabs on slopes are an effective way of preventing soil damage during the transport of materials on and off site.

© Barrell Tree Consultancy 2020

Technical references

Due to copyright restrictions, the relevant British Standard clauses are summarised, not quoted, as follows:

1. ***BS 5837 (2012) Trees in relation to design, demolition and construction – Recommendations:*** Clauses 6.2 (Barriers and ground protection) and 7.3 (Tree protection during development) recommends:

   - 6.2.1.1 All retained trees should be protected by fencing and ground protection before any demolition, development, or soil stripping starts.

   - 6.2.1.3 The protected area is sacrosanct. Fencing and ground protection should not be removed or altered unless agreed by the supervising arboriculturist.

   - 6.2.1.5 The supervising arboriculturist should confirm that the tree protection has been installed as agreed before any significant site work starts.

   - 6.2.3.1 Where deemed appropriate by the project arboriculturist, protective fencing can be set back and the RPA protected with ground protection. Where feasible, existing hard surfacing scheduled for removal should be retained to act as temporary ground protection during construction.

   - 6.2.3.2 If the set-back exposes unmade ground, new temporary ground protection should be installed as part of the tree protection measures before site works start.

   - 6.2.3.3 New temporary ground protection should support all anticipated loading and prevent compaction in the RPA.

   - 6.2.3.4 The location and design of ground protection should be shown on the tree protection plan and detailed within the arboricultural method statement.

© Barrell Tree Consultancy 2020

Technical references

Ground protection

- 6.2.3.5 The objective of ground protection is to avoid soil compaction and prevent adverse impacts on tree root function.
- 7.3.2 Where structures are to be removed from RPAs, fencing and ground protection should be installed up to the edge of the structure to protect the underlying soil.
- 7.3.3 All demolition plant should either operate outside the RPA, or run on ground protection installed before demolition starts.

© Barrell Tree Consultancy 2020

Pollution control

This document is only a summary of its subject matter. You should not rely on this general guidance in isolation, and you should always seek detailed advice from an appropriate expert in relation to specific circumstances before any action is taken or refrained from. You may download and republish (in its full format) and print copies of the guidance – but you must not adapt any guidance.

© Barrell Tree Consultancy 2020

SGN

4

Summary guidance for site operatives

Pollution control

Administration

- Unauthorised damage to protected trees is a criminal offence and could lead to enforcement action.
- Manage pollution control under the normal site risk assessment procedures and comply with the wider site safety rules.
- Where a significant risk of root protection area (RPA) contamination is identified, put pollution control measures in place to manage that risk.

Other relevant SGNs

- Monitor works in RPAs by the supervising arboriculturist (See *SGN 1 Monitoring tree protection*).

Important reminders

- Make provision for emergency spillage clean-up.
- Mix cement and wash vehicles as far away from RPAs as possible.
- Use bunding and impermeable membranes to prevent liquid contaminants reaching RPAs.
- Use impermeable membranes to prevent leachates from poured concrete contaminating RPAs.
- Keep pollution control measures in place until there is no significant risk of RPA contamination.

© Barrell Tree Consultancy 2020

SGN

4

Explanatory notes and examples

Pollution control

Purpose

SGN 4 describes why pollution control is necessary, what form it will take, and how long it will remain in place to effectively protect retained trees, based on the recommendations in *BS 5837 (5.5, 6.2.4, 7.4, 7.5, and A.2)*.

General principles and clarifications

Pollution control is intended to prevent pollutants contaminating RPAs and it will be necessary wherever risk assessment identifies a significant risk of harm arising from this cause. Spilt solid or liquid chemicals that reach RPAs can kill existing roots and may prevent new roots growing, so provision will be made to minimise the risk of soil contamination within the normal risk management protocols for the site. If identified as necessary in the risk assessment process, pollution control measures will include physical means of containing spillages and procedures for clearing them up if they occur.

All cement mixing and vehicle washing points will be located outside RPAs, with provision to contain any spillages. Where the contours of the site create a risk of polluted water or toxic liquids running into RPAs, a precautionary measure of bunding or a frame, sealed with heavy-duty plastic sheeting sufficient to prevent contamination, will be used to contain accidental spillages. Where wet concrete is poured within RPAs, an impermeable liner will be used to prevent contamination of the soil from any leachate. Pollution control measures will remain in place until there is no significant risk of RPA contamination.

© Barrell Tree Consultancy 2020

SGN

4

Explanatory notes and examples

Pollution control

SGN 4-01
The storage of fuels or any toxic chemicals is not permitted in RPAs.

SGN 4-02
Where fuel or other chemicals are stored on site, risk assessment will be carried out to identify if emergency spillage kits are needed to restrict the environmental impact of accidents.

SGN 4-03
Soil bunding or a supporting framework covered in heavy-duty plastic sheeting will be installed where there is a risk of spillages contaminating RPAs. This specifically applies to cement mixing areas and vehicle washing facilities.

© Barrell Tree Consultancy 2020

Explanatory notes and examples

Pollution control

SGN 4-04
Cement washings are toxic to plants and must be contained in a way that prevents contamination of adjacent RPAs.

SGN 4-05
The leachate from poured wet concrete is toxic to plants and must be prevented from contaminating RPAs by using an impermeable membrane to stop any leakage into the soil.

SGN 4-06
When pouring wet concrete in RPAs, methods must be used to prevent spillage and contamination beyond the installation.

© Barrell Tree Consultancy 2020

Explanatory notes and examples

SGN 4-07
Impermeable liners must be used to prevent contamination of the RPA from the leachate that originates from poured concrete.

SGN 4-08
Even small chemical spillages can harm trees, so provision must be made to capture all leakages at the point of storage.

© Barrell Tree Consultancy 2020

Technical references

Technical reference

Due to copyright restrictions, the relevant British Standard clauses are summarised, not quoted, as follows:

1. ***BS 5837 (2012) Trees in relation to design, demolition and construction – Recommendations:*** Clauses 5.5 (Tree protection plan), 6.2.4 (Additional precautions outside the exclusion zone), 7.4 (Permanent hard surfacing within the RPA), 7.5 (Special engineering for foundations within the RPA), and A.2 (Avoiding damage to trees), recommend:

   - 5.5.6 To avoid contamination from pollutants, account should be taken of the effects of slope on the movement of potentially harmful liquid spillages towards RPAs.

   - 6.2.4.3 Materials that could harm trees should be stored and handled well away from RPAs.

   - 7.4.4.5 Concrete should not be poured within RPAs unless an impermeable liner has been installed to prevent contamination by the highly alkaline leachate.

   - 7.5.5 Pile type should be selected to minimise the potentially toxic effects of uncured concrete, e.g. sleeved bored pile or screw pile.

   - A.2.1 Care should be taken to avoid accumulating adverse impacts on retained trees from materials such as uncured concrete, diesel oil, and vehicle washings.

© Barrell Tree Consultancy 2020

Site cranes and piling rigs

This document is only a summary of its subject matter. You should not rely on this general guidance in isolation, and you should always seek detailed advice from an appropriate expert in relation to specific circumstances before any action is taken or refrained from. You may download and republish (in its full format) and print copies of the guidance – but you must not adapt any guidance.

© Barrell Tree Consultancy 2020

SGN 5

Summary guidance for site operatives

Site cranes and piling rigs

Administration

- Unauthorised damage to protected trees is a criminal offence and could lead to enforcement action.

- Work under the normal site risk assessment procedures and comply with the wider site safety rules.

Other relevant SGNs

- Monitor works in root protection areas (RPAs) by the supervising arboriculturist (See *SGN 1 Monitoring tree protection*).

Important reminders

- Programme fixed site cranes to automatically avoid contact with retained trees or instruct operatives to do so manually.

- Use a banksman to ensure that mobile cranes and piling rigs moving around the site do not hit retained trees.

- Where necessary, create working space during demolition by facilitation access pruning and tying back branches, as specified by the supervising arboriculturist.

© Barrell Tree Consultancy 2020

SGN 5

Explanatory notes and examples

Site cranes and piling rigs

Purpose

SGN 5 describes the precautions that will be taken to prevent damage to branches during the installation, use, and removal of fixed and mobile site cranes, and mobile piling rigs, near retained trees, based on the recommendations in *BS 5837 (5.5, 6.2.4, 7.3, and 7.5)*.

General principles and clarifications

Site cranes can be permanently fixed on site for the duration of the development activity or temporarily brought on to site for specific lifting tasks. Both fixed position and mobile cranes can damage branches and trunks by physically hitting them with the machine and the loads being moved.

Where possible, permanent site cranes will be automatically programmed to avoid retained trees. If programming is not possible, operatives will be trained to avoid retained trees through the normal site risk management procedures. Mobile cranes and piling rigs will normally be kept away from protected trees by fencing.

However, if low branches extend over the fencing, damage to the tree will be avoided by either facilitation pruning or manually tying them clear of the work area, as specified by the supervising arboriculturist. All movement of mobile plant near trees with branches that extend beyond the fencing will be overseen by a banksman to ensure that there is no contact.

© Barrell Tree Consultancy 2020

SGN 5

Explanatory notes and examples

Site cranes and piling rigs

SGN 5-01
Where possible, fixed-position cranes should be programmed to automatically avoid retained trees. If that is not possible, operatives should be trained to avoid retained trees as part of the normal site risk management procedures.

SGN 5-02
Access for any plant near trees will be restricted by protective fencing. However, where branches extend over fencing and there is a risk of damage from mobile cranes, operatives should be briefed to avoid them and be guided around the site by a banksman.

SGN 5-03
Loads can be lifted around the site over and around trees, but operatives should be briefed to avoid contact with tree crowns.

© Barrell Tree Consultancy 2020

SGN 5

Explanatory notes and examples

Site cranes and piling rigs

SGN 5-04
Care should be taken to avoid damaging retained trees during the installation and dismantling of fixed-position site cranes.

SGN 5-05
Tall piling rigs have the potential to damage branches up to 20m off the ground and so protective fencing should be used to prevent this where such rigs are used.

SGN 5-06
Facilitation pruning to reduce the length of branches extending over fencing or tying long branches back are ways to prevent damage by piling rigs.

© Barrell Tree Consultancy 2020

Technical references

Due to copyright restrictions, the relevant British Standard clauses are summarised, not quoted, as follows:

1. ***BS 5837 (2012) Trees in relation to design, demolition and construction – Recommendations:*** Clauses 5.5 (Tree protection plan), 6.2.4 (Additional precautions outside the exclusion zone), 7.3 (Tree protection during demolition), and 7.5 (Special engineering for foundations within the RPA), recommend:

   - 5.5.6 To avoid damage to retained tree crowns, working space for cranes, plant, scaffolding and access should be allowed for.

   - 6.2.4.1 Planning of site operations should account for wide loads, tall loads and plant with booms, jibs and counterweights (including drilling rigs) to prevent them hitting retained trees. Adequate clearance from trees should be maintained by using a banksman when using plant near trees.

   - 7.3.1 If necessary, access facilitation pruning or temporarily tying branches back should be carried out to provide working space during demolition. A pruning or tying specification should be prepared by an arboriculturist.

   - 7.5.5 Where piles are to be installed in RPAs, the smallest practical pile diameter should be used because it reduces the size of the rig.

© Barrell Tree Consultancy 2020

Height restrictions

This document is only a summary of its subject matter. You should not rely on this general guidance in isolation, and you should always seek detailed advice from an appropriate expert in relation to specific circumstances before any action is taken or refrained from. You may download and republish (in its full format) and print copies of the guidance – but you must not adapt any guidance.

© Barrell Tree Consultancy 2020

SGN 6

Summary guidance for site operatives

Height restrictions

Administration

- Unauthorised damage to protected trees is a criminal offence and could lead to enforcement action.

- Work under the normal site risk assessment procedures and comply with the wider site safety rules.

Other relevant SGNs

- Monitor works in root protection areas (RPAs) by the supervising arboriculturist (See *SGN 1 Monitoring tree protection*).

Important reminders

- Restrict the height of vehicles entering controlled areas using a height bar above the entrance.

© Barrell Tree Consultancy 2020

SGN 6

Explanatory notes and examples

Height restrictions

Purpose

SGN 6 describes the precautions that will be taken to prevent damage to branches of retained trees from high vehicles, based on the recommendations in *BS 5837 (5.5, 6.2.4, 7.3, and 7.5)*.

General principles and clarifications

Access will be limited at the entrance point to routes with low branches using a height restriction bar above the entrance, with an implication that materials will be unloaded outside sensitive areas and moved with smaller vehicles.

SGN 6-01
This temporary access through a woodland was height-restricted to preserve low branches that formed important screening of the new building from outside the site.

SGN 6-02
Height restriction bars are commonly used on urban sites to prevent accidental damage to low branches.

© Barrell Tree Consultancy 2020

Technical references

Due to copyright restrictions, the relevant British Standard clauses are summarised, not quoted, as follows:

1. ***BS 5837 (2012) Trees in relation to design, demolition and construction – Recommendations:*** Clauses 5.5 (Tree protection plan), 6.2.4 (Additional precautions outside the exclusion zone), 7.3 (Tree protection during demolition), and 7.5 (Special engineering for foundations within the RPA), recommend:

   - 5.5.6 To avoid damage to retained tree crowns, working space for cranes, plant, scaffolding and access should be allowed for.

   - 6.2.4.1 Planning of site operations should account for wide loads, tall loads and plant with booms, jibs and counterweights (including drilling rigs) to prevent them hitting retained trees. Adequate clearance from trees should be maintained by using a banksman when using plant near trees.

   - 7.3.1 If necessary, access facilitation pruning or temporarily tying branches back should be carried out to provide working space during demolition. A pruning or tying specification should be prepared by an arboriculturist.

   - 7.5.5 Where piles are to be installed in RPAs, the smallest practical pile diameter should be used because it reduces the size of the rig required, which reduces the reliance on ground protection and any access facilitation pruning.

© Barrell Tree Consultancy 2020

Excavation in root protection areas

This document is only a summary of its subject matter. You should not rely on this general guidance in isolation, and you should always seek detailed advice from an appropriate expert in relation to specific circumstances before any action is taken or refrained from. You may download and republish (in its full format) and print copies of the guidance – but you must not adapt any guidance.

© Barrell Tree Consultancy 2020

SGN 7

Summary guidance for site operatives

Excavation in root protection areas

Administration

- Unauthorised damage to protected trees is a criminal offence and could lead to enforcement action.
- Work under the normal site risk assessment procedures and comply with the wider site safety rules.
- Brief operatives entering root protection areas (RPAs) by the supervising arboriculturist before work starts.

Other relevant SGNs

- Monitor works in RPAs by the supervising arboriculturist (See *SGN 1 Monitoring tree protection*).
- Design access to avoid soil compaction (See *SGN 3 Ground protection*).
- Additional guidance on excavating to install services is provided in *SGN 11 Installing services in root protection areas*.

Important reminders

- Excavate using specialised compressed air tools or hand tools such as forks and spades, with a preference for air tools. **Note:** Do not mechanically excavate.
- If using hand tools, avoid accidental bark damage by using a fork to loosen the soil to help locate any substantial roots.
- Use a smaller tool such as a trowel to clear the soil away from roots without damaging the bark.
- Remove soil/material from the excavation without disturbing the adjacent rooting environment.
- Retain flexible clumps of smaller fibrous roots if they can be displaced temporarily or permanently beyond the excavation without damage.

© Barrell Tree Consultancy 2020

SGN 7

Summary guidance for site operatives

Excavation in root protection areas

- Cut exposed roots to be removed cleanly 10–20cm behind the final face of the excavation.
- Protect roots temporarily exposed, but to be retained, from direct sunlight, drying out, and extremes of temperature, by appropriate covering such as dampened hessian sacking and/or boards over the hole.
- If necessary, individual roots and clumps of less than 2.5cm width will be cut cleanly without consulting the supervising arboriculturist.
- Retain individual roots and clumps greater than 2.5cm in width where possible and only cut if agreed with the supervising arboriculturist.
- When back-filling, place an inert granular material mixed with top soil or sharp sand around retained roots greater than 2.5cm in width before light compaction.

© Barrell Tree Consultancy 2020

SGN 7

Explanatory notes and examples

Excavation in root protection areas

Purpose

SGN 7 describes the principles that will be applied to authorised excavation in RPAs, based on the recommendations in *BS 5837 (7.2)*, and the guidance in *NJUG (4.1)*.

General principles and clarifications

Excavation can adversely affect retained trees through direct damage to roots and destructively disturbing the rooting environment. However, some trees can tolerate limited amounts of excavation if the work is carried out carefully and the disturbance is kept to a minimum. The amount of disturbance that an individual tree can tolerate depends on factors such as tree species, health, age, and the growing conditions. These are all matters that will be assessed by an experienced and qualified arboriculturist.

Unless otherwise agreed by the supervising arboriculturist, all excavation will be carried out using hand tools, and the preferred method will be by compressed air soil displacement. If the compressed air option is not available, hand digging will be acceptable. Whatever the method of digging, the priority will be to remove soil without damaging the bark and wood of significant woody roots. If individual roots or clumps are discovered, those less than 2.5cm width can be cut cleanly without consultation with the supervising arboriculturist. Individual roots and clumps greater than 2.5cm width will be retained where possible and only cut after agreement by the supervising arboriculturist.

All soil removal must be done with care to minimise the disturbance of roots beyond the immediate area of excavation. Where possible, flexible clumps of smaller fibrous roots should be retained if they can be displaced temporarily or permanently beyond the excavation without damage. If hand digging, a fork should be used to loosen the soil and help locate any substantial roots. Once roots have been located, the trowel should be used to clear the soil away from them without damaging the bark. Exposed roots to be removed should be cut cleanly with a sharp saw or secateurs 10–20cm behind the final face of the excavation. Roots temporarily exposed, but to be retained, will be protected from direct sunlight, drying out and extremes of temperature by appropriate covering such as dampened hessian sacking.

© Barrell Tree Consultancy 2020

Explanatory notes and examples

Excavation in root protection areas

SGN 7-01
Conventional trench installation of services damages tree roots and is not permitted in RPAs.

SGN 7-02
All excavation in RPAs should be with hand-held tools. Where possible, there will be a preference to use air tools because they are very effective at exposing roots and services with minimal damage.

SGN 7-03
Air tools are particularly useful where roots are very dense.

© Barrell Tree Consultancy 2020

Explanatory notes and examples

Excavation in root protection areas

SGN 7-04
Conventional hand tools such as spades and forks should be used where surfacing is so hard and compacted that it is not possible to use air tools.

SGN 7-05
These cobbles and the sub-surface were so compacted that hand tools had to be used to loosen and then remove the material around the roots before replacing with a more favourable rooting medium.

SGN 7-06
Individual roots and clumps greater than 2.5cm in width should be retained undamaged, unless cutting is authorised by the supervision arboriculturist.

© Barrell Tree Consultancy 2020

Explanatory notes and examples

Excavation in root protection areas

SGN 7-07
Once roots have been located with a fork, a smaller tool such as a trowel should be used to clear soil from around the root to avoid damaging bark and wood.

SGN 7-08
Exposed roots to be retained should be protected from light, drying out, and extremes of temperature, by covering with hessian sacking and/or boards until they can be covered back with soil.

SGN 7-09
Where roots to be retained will be exposed for longer than a few hours and there is a risk of drying out, the hessian covering should be kept damp by watering.

© Barrell Tree Consultancy 2020

Explanatory notes and examples

Excavation in root protection areas

SGN 7-10
Where roots have to be removed, they should be cut cleanly beyond the face of the excavation with secateurs or a saw.

SGN 7-11
Where large amounts of soil are excavated to expose roots, it should be temporarily stored on heavy duty plywood boards, or similar, to prevent ground compaction to the RPA beneath.

SGN 7-12
Excavation by machines is not permitted in RPAs.

© Barrell Tree Consultancy 2020

Technical references

Due to copyright restrictions, the relevant British Standard clauses are summarised, not quoted, as follows:

1. ***BS 5837 (2012) Trees in relation to design, demolition and construction – Recommendations:*** Clause 7.2 (Avoiding physical damage to the roots during demolition or construction) recommends:

   - 7.2.1 Other than for piling, existing ground levels in RPAs should not be disturbed. However, limited manual excavation might be acceptable if it is done carefully, using hand-held tools and preferably by compressed air soil displacement, subject to justification.

   - 7.2.2 Exposed roots should be protected to prevent desiccation and temperature changes, and the excavation backfilled as soon as possible after the protection has been removed.

   - 7.2.3 Individual roots and clumps of less than 25mm width can be pruned without further consultation, if necessary, making a clean cut. Roots and clumps greater than 25mm in width should only be cut if agreed by the supervising arboriculturist.

   - 7.2.4 Backfill around retained roots should be with topsoil or uncompacted sharp sand, or other loose inert granular fill.

2. ***National Joint Utilities Group (NJUG) Guidelines for the Planning, Installation and Maintenance of Utility Apparatus in Proximity to Trees – Issue 2: Section 4.1 (How to avoid damage to trees – Below ground) advises:***

   - "4.1.3 Realignment: Whenever possible apparatus should always be diverted or re-aligned outside the Prohibited or Precautionary Zones. Under no circumstances can machinery be used to excavate open trenches within the Prohibited Zone. Where works are required for the laying or maintenance of any apparatus within the Prohibited or Precautionary Zones there are various techniques available to minimise damage.

© Barrell Tree Consultancy 2020

Acceptable techniques in order of preference are;

a) Trenchless: Wherever possible trenchless techniques should be used. The launch and reception pits should be located outside the Prohibited or Precautionary Zones. In order to avoid damage to roots by percussive boring techniques it is recommended that the depth of run should be below 600mm. Techniques involving external lubrication of the equipment with materials other than water (e.g. oil, bentonite, etc.) must not be used when working within the Prohibited Zone. Lubricating materials other than water may be used within the Precautionary Zone following consultation and by agreement.

b) Broken Trench – Hand-dug: This technique combines hand dug trench sections with trenchless techniques if excavation is unavoidable. Excavation should be limited to where there is clear access around and below the roots. The trench is excavated by hand with precautions taken as for continuous trenching as in (c) below. Open sections of the trench should only be long enough to allow access for linking to the next section. The length of sections will be determined by local conditions, especially soil texture and cohesiveness, as well as the practical needs for access. In all cases the open sections should be kept as short as possible and outside of the Prohibited Zone.

c) Continuous Trench – Hand-dug: The use of this method must be considered only as a last resort if works are to be undertaken by agreement within the Prohibited Zone. The objective being to retain as many undamaged roots as possible."

© Barrell Tree Consultancy 2020

Removing surfacing and structures in root protection areas

This document is only a summary of its subject matter. You should not rely on this general guidance in isolation, and you should always seek detailed advice from an appropriate expert in relation to specific circumstances before any action is taken or refrained from. You may download and republish (in its full format) and print copies of the guidance – but you must not adapt any guidance.

© Barrell Tree Consultancy 2020

SGN 8

Summary guidance for site operatives

Removing surfacing and structures in root protection areas

Administration

- Unauthorised damage to protected trees is a criminal offence and could lead to enforcement action.
- Work under the normal site risk assessment procedures and comply with the wider site safety rules.
- Brief operatives entering root protection areas (RPAs) by the supervising arboriculturist before work starts.

Other relevant SGNs

- Monitor works in RPAs by the supervising arboriculturist (See *SGN 1 Monitoring tree protection*).
- Design access to avoid soil compaction (See *SGN 3 Ground protection*).
- Minimise excavation into original undisturbed soil (See *SGN 7 Excavation in root protection areas*).

Important reminders

- Manually break up and remove debris from the RPA using appropriate tools, e.g. pneumatic breaker, crow bar, sledgehammer, pick, mattock, shovel, spade, trowel, fork, and wheelbarrow. Have secateurs and a handsaw available to cut exposed roots to be removed.
- Remove debris from the RPA without disturbing the adjacent rooting environment, e.g. lifting out with a machine located outside the RPA or manually carry out over ground protection.
- Where appropriate, use machines with a long reach if they can work from outside RPAs, or from protected areas within RPAs without encroaching onto unprotected soil.
- Where appropriate, leave below ground structures in place if their removal will cause excessive RPA disturbance.

© Barrell Tree Consultancy 2020

SGN

8

Explanatory notes and examples

Removing surfacing and structures in root protection areas

Purpose

SGN 8 describes the practical requirements for removing surfacing and structures in RPAs, based on the recommendations in *BS 5837 (7.3)*.

General principles and clarifications

For the purposes of this guidance, the following broad definitions apply:

- Surfacing: Any hard surfacing used as a vehicular road, parking, or pedestrian path, including tarmac, solid stone, crushed stone, compacted aggregate, concrete, and timber decking. This does not include compacted soil with no hard covering.

- Structures: Any man-made structure above or below ground including service pipes, walls, gate piers, buildings, and foundations. Typically, this would include drainage structures, car-ports, bin stores, and concrete slabs supporting buildings.

In principle, roots frequently grow adjacent to and beneath existing surfacing and structures, so great care is needed during access and demolition. Damage can occur through physical disturbance of roots and/or the compaction of soil around them from the weight of machinery or repeated pedestrian passage. This is not generally a problem while surfacing and structures remain in place because they spread the load on the soil beneath and further protective measures are not normally necessary. However, once that protection is removed and the soil below is exposed, the potential for damage to roots becomes an issue.

Careful consideration should be given to retaining structures and surfacing in place, if that will result in less disturbance to retained roots. For example, if a new wall needs to be constructed on the footprint of an existing wall, it might be better to retain the original footing and build on that, rather than remove it and install a new footing.

In summary, there should be no vehicular or repeated pedestrian access unless existing ground protection is retained or new protective measures are installed. All exposed RPAs must be protected until there is no further risk of damage.

© Barrell Tree Consultancy 2020

SGN

8

Explanatory notes and examples

Removing surfacing and structures in root protection areas

SGN 8-01
Machines with a long reach can be used to lift out heavy surfacing and structures if the machine sits outside the RPA and the exposed surface is protected before there is any further access.

SGN 8-02
Careful lifting of cemented-in sets round this tree allowed them to be re-laid on a permeable sand base, improving the water input into the soil around the trunk.

SGN 8-03
These trees had impermeable surfacing right up to their trunks, which had to be removed by hand before installing new structures.

© Barrell Tree Consultancy 2020

SGN 8

Explanatory notes and examples

Removing surfacing and structures in root protection areas

SGN 8-04
This old concrete footing close to a large mature tree was retained, thus avoiding excessive disturbance of roots below it.

SGN 8-05
The RPAs for the retained trees around the boundary are protected by a combination of fencing and ground protection.

SGN 8-06
If structures are firmly incorporated into roots, it may be best to leave them in place rather than attempt to remove them and irreversibly damage the tree.

© Barrell Tree Consultancy 2020

Technical references

Due to copyright restrictions, the relevant British Standard clauses are summarised, not quoted, as follows:

1. ***BS 5837 (2012) Trees in relation to design, demolition and construction – Recommendations:*** Clause 7.3 (Tree protection during demolition) recommends:

   - 7.3.2 RPAs up to the edge of structures to be removed should be protected.

   - 7.3.3 Demolition plant should either operate outside the RPA or run on ground protection installed before work starts.

   - 7.3.4 Demolition of buildings near retained trees should be done inwards within the footprint of the existing building.

   - 7.3.5 Where possible, and after consultation with the supervising arboriculturist, it is preferable to leave redundant structures in RPAs to avoid damage to tree roots.

   - 7.3.6 Existing surfacing should be removed with care and any machine should work backwards over the area to prevent damage to any exposed RPA. It is preferable to leave any existing sub-base in situ if new surfacing is to be laid.

© Barrell Tree Consultancy 2020

Installing/upgrading surfacing in root protection areas

This document is only a summary of its subject matter. You should not rely on this general guidance in isolation, and you should always seek detailed advice from an appropriate expert in relation to specific circumstances before any action is taken or refrained from. You may download and republish (in its full format) and print copies of the guidance – but you must not adapt any guidance.

© Barrell Tree Consultancy 2020

SGN 9

Summary guidance for site operatives

Installing/ upgrading surfacing in root protection areas

Administration

- Unauthorised damage to protected trees is a criminal offence and could lead to enforcement action.
- Work under the normal site risk assessment procedures and comply with the wider site safety rules.
- Brief operatives entering root protection areas (RPAs) by the supervising arboriculturist before work starts.

Other relevant SGNs

- Monitor works in root protection areas (RPAs) by the supervising arboriculturist (See *SGN 1 Monitoring tree protection*).
- Design access to avoid soil compaction (See *SGN 3 Ground protection*).
- Follow the guidance in *SGN 4 Pollution control*, if concrete is poured within or near RPAs.
- Minimise excavation into original undisturbed soil (See *SGN 7 Excavation in root protection areas*).
- Follow the guidance in *SGN 8 Removing surfacing and structures in root protection areas*, if existing surfacing is to be removed before installing new surfacing.
- Follow the guidance in *SGN 10 Installing structures in root protection areas*, if the surfacing is to be installed on supports, i.e. piles, pads, or posts.

Important reminders

- For ground without existing surfacing, remove any loose material at the soil surface by hand and do not excavate into existing soil levels unless approved by the supervising arboriculturist.

© Barrell Tree Consultancy 2020

SGN 9

Summary guidance for site operatives

Installing/ upgrading surfacing in root protection areas

- For ground with a vegetation layer, excavations may be appropriate to remove the turf layer and surface vegetation, but this must be agreed by the supervising arboriculturist.
- All new surfacing must be set back from trunks and buttress roots by at least 50cm, unless otherwise agreed by the supervising arboriculturist.
- Fill low points on undulating surfaces to an even level with any high points using an agreed granular material such as sand or stone.
- Do not mechanically compact new fill or existing soil.
- If a three-dimensional cellular confinement system is used, install it according to the manufacturer's technical specification. **Note:** The cellular fill will be washed angular stone with no fines, as specified by the manufacturer.

© Barrell Tree Consultancy 2020

SGN

9

Explanatory notes and examples

Installing/ upgrading surfacing in root protection areas

Purpose

SGN 9 describes the practical requirements for installing new surfacing and upgrading existing surfacing in RPAs, based on the recommendations in *BS 5837 (7.4)*.

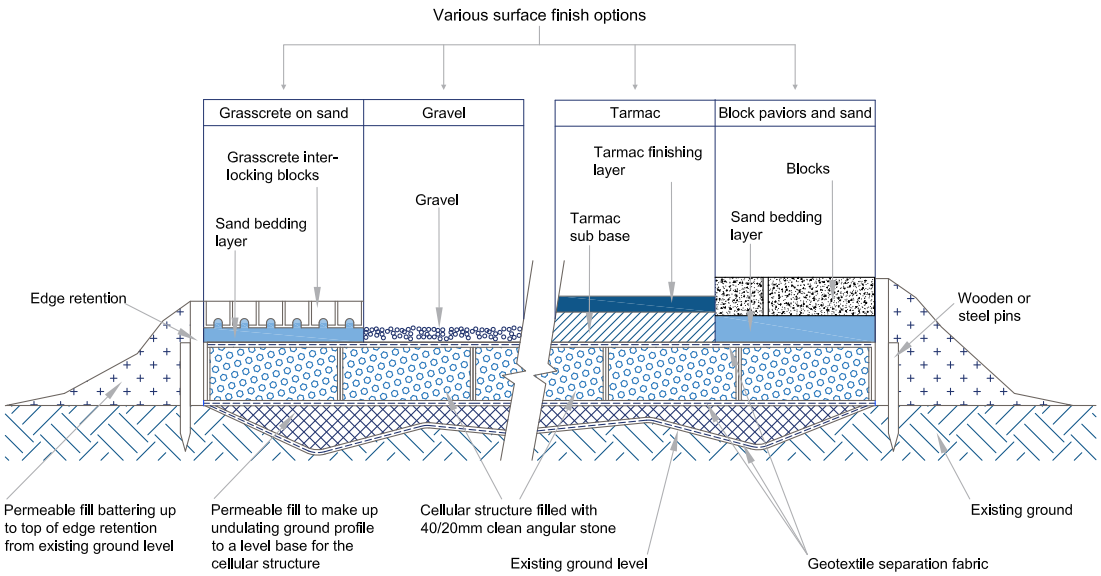

Illustrative specification for no-dig cellular confinement surfacing with examples of finishing options.
Note: The final design must be site specific and detailed by an appropriate specialist.

BS 5837 recommends that three-dimensional cellular confinement systems are an appropriate sub-base for installing surfacing in RPAs. Most products are made from heavy-duty plastic that is pulled apart to open into cells. These are then filled with washed stone, after the product is spread over the ground and pinned in place. This forms a base layer that acts as a floating raft, spreading the load across the whole construction width. The base layer can be topped with a variety of finishes as illustrated in the cross-section.

Product suppliers:
Protectaweb 3D cellular confinement product: wrekinproducts.com

© Barrell Tree Consultancy 2020

SGN 9

Explanatory notes and examples

Installing/ upgrading surfacing in root protection areas

General principles and clarifications

Conventional surfacing installation based on excavating and compacting a supporting sub-base is unacceptable in RPAs because it can damage roots and the rooting environment. This harm is caused by killing roots, compacting soil structure, and impeding water/gaseous exchange through the soil. Adverse impact on trees will be reduced by minimising the extent of these changes in RPAs.

New surfacing solutions

Important elements of an effective design include protecting roots and the rooting environment during installation, a load spreading capability to prevent localised compaction, and providing adequate permeability for water and gasses to support living roots. The main approaches are:

- three-dimensional cellular confinement systems filled with washed stone laid directly onto the soil surface;
- concrete slabs cast directly onto the soil surface; and,
- surfacing supported above the soil surface on top of piles, pads, or posts.

The specific design of the chosen approach is an engineering issue that will take account of the bearing capacity of the soil, the intended loading, and the frequency of loading. The detail of product and specification are technical matters to be provided by an appropriate specialist.

Dealing with undulating surfaces and establishing a tolerable level of excavation

The precise location and depth of roots within the soil is unpredictable and will often only be known when careful digging starts on site. Ideally, all new surfacing in RPAs will be no-dig, i.e. requiring no excavation, but this can sometimes be difficult on undulating surfaces. New surfacing normally requires an evenly graded sub-base layer, which can be made up to any high points with granular, permeable fills such as crushed stone or sharp sand. This sub-base will not be compacted as would happen in conventional surface installation. Some limited excavation can be necessary to achieve this and need not be damaging if carried out carefully and large roots are not cut. Tree roots and grass roots rarely occupy the same soil volume at the top of the soil profile, so the removal of

© Barrell Tree Consultancy 2020

an established turf layer up to 5cm from the surface is unlikely to be damaging to trees. However, this may not be possible where there is no grass because tree roots may grow right up to the soil surface. In some situations, it may be possible to dig to a greater depth, depending on local conditions, but this will be assessed by the supervising arboriculturist if excavation deeper than 5cm is anticipated.

On undulating surfaces, finished gradients and levels will be planned with sufficient flexibility to allow on-site adjustment if excavation of any high points reveals large unexpected roots near the surface. If the roots are less than 2.5cm in diameter, they can be cut and the base for the surfacing formed with the preferred minimal excavation of up to 5cm. However, if roots over 2.5cm in diameter are exposed, cutting them may be too damaging and further excavation may not be possible. If that is the case, the surrounding levels will be adjusted to take account of these high points by filling with suitable material. If this is not practical, the situation will be discussed with the supervising arboriculturist before a final decision is made.

Edge retention

Conventional kerb edge retention set in concrete-filled excavated trenches can cause damage to roots and will be avoided. Edge retention in RPAs will be designed to avoid any significant excavation into existing soil levels, with several approaches that are fit for this purpose. For block paviours, the use of pre-formed edging secured by metal pins is effective and can be reinforced by concrete supports if there is no excavation into the soil. Railway sleepers pinned in place or wooden boards offer alternative options, depending on the expected loading of the surfacing. If the edge retention needs to be battered down to lower surrounding ground levels, a permeable soil fill will be used, as agreed with the supervising arboriculturist.

Footpaths and surfacing without a load-spreading base layer

In some situations, limited-width floating concrete rafts constructed directly onto the soil surface may be acceptable for both pedestrian and vehicular access, but the design will not include any strip-dug supports. If concrete is poured directly, precautions

© Barrell Tree Consultancy 2020

must be taken to ensure that no toxic fluids can contaminate the adjacent soil, e.g. confining the concrete in an impermeable liner. Alternatively, elevated paths supported on low impact frames or post supports allow a decking surface to cross sensitive areas. Where paths are installed very close to trunks, provision will be made for distortion from future root growth through using flexible components for the supporting frame and surfacing.

Specific considerations for upgrading existing surfacing

When upgrading existing surfacing, the preferred option will be to leave it in place and install the new surfacing on top of it. If the retained surfacing is impermeable, it may improve conditions for tree roots if it is punctured before the new surfacing is laid, but this is detail to be agreed with the supervising arboriculturist. If the existing surfacing is to be removed, it will be excavated down to the soil level beneath following the guidance set out in *SGN 8 Removing surfacing and structures in root protection areas*. The new surfacing will then be installed on this surface, as described above.

New surfacing near trunks

All new surfacing should be set back from trunks and buttress roots by at least 50cm to allow space for future growth and minimise the risk of distortion.

© Barrell Tree Consultancy 2020

SGN 9

Explanatory notes and examples

Installing/ upgrading surfacing in root protection areas

SGN 9-01
The flat-packed three-dimensional cells are pulled apart, spread across the area to be surfaced, and pinned in place ready for the washed angular stone fill (with no fines).

SGN 9-02
The stone-filled cells spread the load of traffic to prevent localised compaction. The permeable geotextile membrane on the ground allows the movement of water and gasses, but prevents the migration of stone into the soil profile.

© Barrell Tree Consultancy 2020

SGN 9

Explanatory notes and examples

Installing/ upgrading surfacing in root protection areas

SGN 9-03
Although *BS 5837* recommends a minimum distance of 50cm between new surfacing and buttress roots, there may be scope for flexibility in this separation for mature trees with little potential for future growth, if agreed by the supervising arboriculturist.

SGN 9-04
A conventional concrete haunching can be used to retain new surfacing if it is not dug into a trench – here it is placed on top of the three-dimensional cellular confinement layer.

SGN 9-05
Preparation of new residential access drive with base formation above original ground level and permeable geotextile layer covering the ground. Wooden boards are pinned in place to create informal rustic surface edging.

© Barrell Tree Consultancy 2020

Explanatory notes and examples

Installing/ upgrading surfacing in root protection areas

SGN 9-06
The three-dimensional cells have been installed and filled with washed stone, ready for the finished surface to be laid above. The ground beyond the drive edges has been profiled with backfilled topsoil.

SGN 9-07
An alternative to the flexible three-dimensional cells is rigid interlocking plastic cells, again filled with washed stone and retained by pinned wooden edges.

SGN 9-08
Another option for wooden edges at corner points that allows for vehicles to accidentally track over the edge of the formal surfacing.

© Barrell Tree Consultancy 2020

SGN 9

Explanatory notes and examples

Installing/ upgrading surfacing in root protection areas

SGN 9-09
This temporary access for heavy construction traffic on the outer edge of a RPA is a concrete slab cast above ground level and will be removed when the project is completed.

SGN 9-10
In some situations, it may be appropriate to cast a free-floating concrete surface directly onto the soil surface provided provision is made to prevent soil contamination while the concrete is being poured.

SGN 9-11
This 12m RPA was covered in tarmac and used as parking. This original surfacing was removed and replaced with a new patio set above the ground level, with provision for water and air input into the covered RPA.

© Barrell Tree Consultancy 2020

SGN 9

Explanatory notes and examples

Installing/ upgrading surfacing in root protection areas

SGN 9-12
Where new surfacing is to be installed over existing, sometimes it may assist the movement of gasses and water if the existing surfacing is punctured.

SGN 9-13
An option for installing surfacing close to mature trees is to use a light metal frame with rubberised surfacing to allow the path to distort without failing as the roots grow.

SGN 9-14
Board walks supported on posts or a light frame are another way of providing pedestrian access across sensitive RPAs. (Photo courtesy of Philip van Wassenaer).

© Barrell Tree Consultancy 2020

Explanatory notes and examples

Installing/ upgrading surfacing in root protection areas

SGN 9-15
New surfacing such as decking can be supported above the ground on posts leaving the soil surface beneath undisturbed.

SGN 9-16
Although this is only a temporary surface, railway sleepers pinned into the ground can be used to retain the edges of new surfacing.

SGN 9-17
Where space is restricted it is possible to use metal edging.

© Barrell Tree Consultancy 2020

Technical references

Due to copyright restrictions, the relevant British Standard clauses are summarised, not quoted, as follows:

1. ***BS 5837 (2012) Trees in relation to design, demolition and construction – Recommendations:*** Clause 7.4 (Permanent hard surfacing within the RPA) recommends:

   - 7.4.2.1 New surface design should not require excavation other than the removal of the turf layer and surface vegetation. The design should be able to bear any anticipated loading, especially if it must carry construction traffic.

   - 7.4.2.2 The design should evenly distribute the loading to avoid localised compaction.

   - 7.4.2.7 The design should be resistant to or tolerant of deformation by tree roots, and should be set back from the stem and any root buttresses by a minimum of 50cm to allow for growth and movement. Levels can be made up using appropriate inert granular material. **Note:** Piles, pads, elevated beams, and three-dimensional cellular confinement systems, can be used to support surfaces. If excavation is required, the location of roots greater than 2.5cm in diameter should be determined by exploratory investigations and retained if possible.

   - 7.4.3 The conventional installation of kerbs, edgings, and haunchings, can damage tree roots and should be avoided either by using alternative methods of edge support or by not using supports at all. **Note:** Examples of suitable edge supports include above-ground peg and board edging, sleepers, gabions, and other non-invasive ground-contact structures.

   - 7.4.4.3 Ground levels should not be reduced to establish the new hard surface at the former ground level. Loose debris and turf should be removed carefully and the new surface should sit on top of the original soil.

© Barrell Tree Consultancy 2020

- 7.4.4.4 Fill to raise levels should be a granular material which remains gas- and water-permeable throughout its design life.

- 7.4.4.5 Wet concrete should not be poured in the RPA unless an impermeable liner has been installed to prevent soil contamination from the toxic leachate.

© Barrell Tree Consultancy 2020

Installing structures in root protection areas

This document is only a summary of its subject matter. You should not rely on this general guidance in isolation, and you should always seek detailed advice from an appropriate expert in relation to specific circumstances before any action is taken or refrained from. You may download and republish (in its full format) and print copies of the guidance – but you must not adapt any guidance.

© Barrell Tree Consultancy 2020

SGN 10

Summary guidance for site operatives

Installing structures in root protection areas

Administration

- Unauthorised damage to protected trees is a criminal offence and could lead to enforcement action.
- Work under the normal site risk assessment procedures and comply with the wider site safety rules.
- Brief operatives entering root protection areas (RPAs) by the supervising arboriculturist before work starts.

Other relevant SGNs

- Monitor works in RPAs by the supervising arboriculturist (See *SGN 1 Monitoring tree protection*).
- Design access to avoid soil compaction (See *SGN 3 Ground protection*).
- Reduce the risk of chemical contamination from poured wet concrete (See *SGN 4 Pollution control*).
- Minimise excavation into original undisturbed soil (See *SGN 7 Excavation in root protection areas*).
- Install any surfacing acting as support for light structures directly onto the soil surface with minimal excavation (See *SGN 9 Installing/ upgrading surfacing in root protection areas*).

Important reminders

- Hand-dig pile, pad, or post locations down to a depth of 60cm and, if necessary, adjust location to avoid cutting roots greater than 2.5cm diameter.
- No excavation into existing soil levels except where authorised for supports. **Note:** This specifically applies to ground beams sitting above supports.
- Make provision for ventilation and watering beneath substantial structures.

© Barrell Tree Consultancy 2020

SGN 10

Summary guidance for site operatives

Installing structures in root protection areas

- Where feasible, keep in place existing below ground structures where they can be reused to support new structures, e.g. new walls built on existing wall footings.

© Barrell Tree Consultancy 2020

SGN 10

Explanatory notes and examples

Installing structures in root protection areas

Purpose

SGN 10 describes the practical requirements for installing new structures in RPAs, based on the recommendations in *BS 5837 (7.5 and 7.6)*.

General principles and clarifications

Conventional installation of new structures using strip foundations is unacceptable in RPAs because the excavations can damage roots and adversely disturb the soil. Additionally, the covering created by the new structure over the soil can impede water and gaseous exchange. Adverse impact on trees will be reduced by minimising the extent of these changes in RPAs.

The installation of pile, pad, or post supports

Substantial structures such as heavy walls, garages, and larger buildings, will sit above ground level, supported by piles, pads, or posts, with provision for water and gaseous input into the covered area. The risk of harm through soil compaction during the construction activity will be reduced using ground protection as described in *SGN 3 Ground protection*.

The risk of chemical contamination will be reduced by following the guidance in *SGN 4 Pollution control*. The risk of direct root damage from excavation will be reduced by following the

© Barrell Tree Consultancy 2020

guidance in *SGN 7 Excavation in root protection areas*. If feasible, careful consideration should be given to retaining existing footings, especially relating to walls. This will allow the installation of new structures without the disturbance required to excavate and install new footings, as explained in *SGN 8 Removing surfacing and structures in root protection areas*.

All support locations will be hand-dug to a depth of 60cm to identify if any roots over 2.5cm diameter are in the way. Sufficient flexibility will be built into the design to allow support locations to be moved to avoid roots over 2.5cm diameter. Additionally, the diameter and the distribution of the supports will be minimised to reduce the risks of disturbance during the installation. The bases of such structures will allow for air and water input beneath through ventilation and irrigation provision.

The installation of no-dig surfacing supports

An alternative for lighter structures such as small sheds, carports, and bin stores, is to support them on custom designed no-dig surfacing, installed directly onto the soil surface, as described in *SGN 9 Installing/upgrading surfacing in root protection areas*.

Basements

It is also feasible to install subterranean structures (basements) beneath RPAs if the volume of soil forming the RPA can be retained without significant disturbance. The detailed design and specification of all these solutions is an engineering issue, to be informed and guided by tree expertise.

SGN 10-01
Support locations should be hand-dug to a depth of 60cm to see if there are any significant roots in the way, with provision to move the location if roots are found (note the pile in this example was finally installed to avoid the root).

© Barrell Tree Consultancy 2020

SGN 10

Explanatory notes and examples

Installing structures in root protection areas

SGN 10-02
Ground protection should be used to spread the load of the piling rig once excavation has confirmed that no substantial roots are in the preferred pile location.

SGN 10-03
Piles can also be used to support bridges across sensitive RPAs, but the temporary ground protection must be removed before the main structure is either imported in or cast on site.

SGN 10-04
The RPA for the trees behind the fencing extends across the whole view. The soil surface is protected by heavy duty ground protection to prevent compaction and the poured concrete piles were sleeved to prevent RPA contamination.

© Barrell Tree Consultancy 2020

SGN 10

Explanatory notes and examples

Installing structures in root protection areas

SGN 10-05
This RPA was protected from compaction from the piling rig by a three-dimensional cellular covering. The cellular covering was cut away from the pile locations, which were then hand-dug down to 60cm to make sure that no roots over 2.5cm were damaged. The piles were a screw type to avoid soil contamination from poured concrete.

SGN 10-06
Small diameter piles (less than 15cm) are an effective means of supporting structures in RPAs with minimal disturbance. The wooden formwork provides the receptacle for the steel reinforcement and the poured concrete that will form the building slab.

SGN 10-07
Where the slabs for larger structures are cast on site, a biodegradable void-former can be used to temporarily support the weight of the liquid concrete until it sets. The void-former can then be wetted and washed away to leave a void, or left to degrade naturally, both of which allow movement of air beneath the slab.

© Barrell Tree Consultancy 2020

Explanatory notes and examples

SGN 10-08
This garage was supported on piles with a concrete ground slab poured on site using a biodegradable void-former. Note the drainage downpipe feeding into a perforated watering pipe laid below the slab to provide water input into the RPA.

SGN 10-09
It is possible to support very large structures on piles within sensitive RPAs.

SGN 10-10
This building is supported on piles, with ground beams above onto which the floor is laid. The beams are above ground level and the pipes are perforated with a shingle surround to provide water input into the RPA once the structure is completed.

© Barrell Tree Consultancy 2020

SGN

10

Explanatory notes and examples

Installing structures in root protection areas

SGN 10-11
These carports are formed by wooden posts above a three-dimensional cellular no-dig and load-spreading surface of permeable crushed stone.

SGN 10-12
The workman is standing within the outline of a free standing concrete slab that is to be installed above the existing ground level within an RPA that was previously covered in tarmac as parking.

SGN 10-13
This raised deck extension is supported on wooden posts, hand dug to avoid significant roots.

© Barrell Tree Consultancy 2020

Explanatory notes and examples

Installing structures in root protection areas

SGN 10-14
The original church wall was displaced towards the pavement and had to be removed for safety reasons. The replacement structure was built on a new concrete reinforced footing installed without cutting any significant roots.

SGN 10-15
This covered bin store was constructed within RPAs by placing block paving on a levelled sand base directly onto the existing ground level, with the posts in hand dug holes to support the roof.

SGN 10-16
This church extension was built on a concrete beam and block floor slab supported on piles located in hand dug holes. Ground protection around the margins protected the RPA of the adjacent tree during construction.

© Barrell Tree Consultancy 2020

Explanatory notes and examples

SGN 10-17
Where significant roots cannot be cut, a bridging lintel of concrete or steel can be used to support the wall slightly above the roots to be retained.

SGN 10-18
Hand excavation of soil and shrub roots allows preformed steel or concrete lintels to be installed as a solid base for the curved wall construction, raised slightly above ground level, sitting on small diameter piles.

SGN 10-19
The voids beneath the wall and between the piles can be filled with soil/permeable fill leaving no indication that the finished wall is supported above the ground, allowing important tree roots to be retained intact.

© Barrell Tree Consultancy 2020

Explanatory notes and examples

SGN 10-20
These significant roots crossed a new wall footing and instead of cutting them, they were carefully excavated, wrapped in hessian, and ducted with modified plastic protection to minimise any adverse impact from, toxic leachate from the poured concrete. This allowed them to remain intact and functioning once the wall was completed above.

SGN 10-21
An alternative to modified plastic ducting through concrete footings is to use bricks to create side supports and cover with a steel plate to create a structural surround for the root, which protects the root from the poured concrete.

SGN 10-22
This long root ran partially beneath the location of the new wall. The wall footing was poured on top of this permanent protective duct, allowing the root to be retained without any damage and providing adequate support for the new wall.

© Barrell Tree Consultancy 2020

Technical references

Due to copyright restrictions, the relevant British Standard clauses are summarised, not quoted, as follows:

1. ***BS 5837 (2012) Trees in relation to design, demolition and construction – Recommendations:*** Clauses 7.5 (Special engineering for foundations within the RPA) and 7.6 (Subterranean construction within the RPA) recommend:

   - 7.5.1 Traditional strip footings can result in extensive root loss and should be avoided, but specially engineered structures may be justified if this allows good quality trees to be retained. Foundation designs should consider existing levels, proposed finished levels, and cross-sectional details. Site-specific and specialist advice regarding foundation design should be sought from the project arboriculturist and an engineer.

   - 7.5.2 Root damage can be minimised by using piles supporting beams, laid at or above ground level, with site investigation down to a minimum depth of 60cm to determine their optimal location. Alternatively, structures can be cantilevered to avoid roots identified by site investigation.

   - 7.5.3 Slabs for minor structure should bear on existing ground level, and should not exceed an area greater than 20% of the existing unsurfaced ground.

   - 7.5.4 Slabs for larger structures should be designed with an irrigation system and a ventilated air space between the underside of the slab and the existing soil surface. The design should take account of any effect on the load-bearing properties of underlying soil from the redirected roof run-off and prior approval should be sought from the building control authority.

   - 7.5.5 The smallest practical pile diameter should be used to reduce the possibility of striking major tree roots. Small piles also reduce the size of the rig required and can reduce the need for access facilitation pruning. The pile type should be selected to protect RPAs from the potentially toxic effects of uncured

© Barrell Tree Consultancy 2020

concrete, e.g. sleeved bored pile or screw pile.

- 7.6.1 Where subterranean basements are proposed within RPAs, it is essential to avoid excavating down through rootable soil. It might be technically possible to form the excavation by undermining the soil beneath the RPA.

© Barrell Tree Consultancy 2020

Installing services in root protection areas

This document is only a summary of its subject matter. You should not rely on this general guidance in isolation, and you should always seek detailed advice from an appropriate expert in relation to specific circumstances before any action is taken or refrained from. You may download and republish (in its full format) and print copies of the guidance – but you must not adapt any guidance.

© Barrell Tree Consultancy 2020

SGN 11

Summary guidance for site operatives

Installing services in root protection areas

Administration

- Unauthorised damage to protected trees is a criminal offence and could lead to enforcement action.
- Work under the normal site risk assessment procedures and comply with the wider site safety rules.
- Brief operatives entering root protection areas (RPAs) by the supervising arboriculturist before work starts.

Other relevant SGNs

- Monitor works in RPAs by the supervising arboriculturist (See *SGN 1 Monitoring tree protection*).
- Design access to avoid soil compaction (See *SGN 3 Ground protection*).
- Minimise excavation into original undisturbed soil (See *SGN 7 Excavation in root protection areas*).

Important reminders

- Trenchless installation will be preferred. The fall-back approaches of hand-dug broken trench and then hand-dug continuous trench, will be acceptable if agreed by the supervising arboriculturist.
- For trenchless installation, the starting and finishing pits will be outside RPAs.

© Barrell Tree Consultancy 2020

SGN

11

Explanatory notes and examples

Installing services in root protection areas

Purpose

SGN 11 describes the practical requirements for installing new services within RPAs, based on the recommendations in *BS 5837 (7)* and the guidance in *NJUG (4.1*).

General principles and clarifications

Excavation to upgrade existing services or install new services in RPAs may damage retained trees. Where possible, all services will be outside RPAs and installation in RPAs will only be chosen as a last resort. If installation within RPAs is being considered, as advised in 4.1.3 of the NJUG guidance, the decision will be made in consultation with the supervising arboriculturist before any work is carried out. If service installation is agreed within RPAs, the NJUG protocol as set out in 4.1.3 of its guidance will be used to decide the most appropriate method.

In summary, this sets out that "Acceptable techniques in order of preference are; a) trenchless, ... b) Broken trench – hand-dug ... c) Continuous trench – hand-dug". If trenchless methods are to be used, the starting and finishing pits dug at each end of the service run will be outside RPAs. Where a hand-digging option is agreed, any roots discovered during the excavations will be dealt with as described in *SGN 7 Excavation in root protection areas*. Backfilled material around excavated services will not be heavily compacted, observing the specific advice provided in 4.1.5 of the NJUG guidance.

© Barrell Tree Consultancy 2020

SGN 11

Explanatory notes and examples

Installing services in root protection areas

SGN 11-01
Conventional installation of services digging a trench with a machine is not permitted in RPAs.

SGN 11-02
Trenching with machines to install services close to trees can make them unsafe and cause their premature death.

SGN 11-03
Thrust boring is the preferred option for installing service routes through the RPAs of retained trees.

© Barrell Tree Consultancy 2020

SGN 11

Explanatory notes and examples

Installing services in root protection areas

SGN 11-04
The start and finish pits for thrust boring are substantial and must be outside of RPAs.

SGN 11-05
Alternatives to thrust boring are to hand-dig broken or continuous trenches, so that roots can be retained (with the service ducting threaded beneath). Note the ground protection boards with soil piled on top on the left.

SGN 11-06
Ducting services that have to be threaded through existing roots is good practice because it reduces the need to excavate in the future. Note the hessian protection over roots while they are temporarily exposed to prevent sunscorch and drying.

© Barrell Tree Consultancy 2020

Technical references

Due to copyright restrictions, the relevant British Standard clauses are summarised, not quoted, as follows:

1. ***BS 5837 (2012) Trees in relation to design, demolition and construction – Recommendations:*** Clause 7 (Demolition and construction in proximity to existing trees) recommends:

   - 7.1.3 The installation of underground utility apparatus using trenchless technology will be acceptable where entry and retrieval pits can be formed outside the RPA. Even if the utility installation does not require planning permission, the work should still be undertaken in accordance with the guidance in NJUG Volume 4, issue 2.

   - 7.7.1 Care should be taken when routeing underground apparatus because the mechanical trenching can sever roots and change the local soil hydrology, both of which can adversely affect tree health. Wherever possible, underground services should be routed outside RPAs. If services are installed within RPAs, it is preferable to use common ducts, with inspection chambers sited outside the RPA.

   - 7.7.2 Underground services within the RPAs should be shown on a plan prepared in conjunction with the project arboriculturist. Trenchless insertion methods should be the preferred option, with entry and retrieval pits outside RPAs, but if roots can be retained and protected, excavation using hand-held tools might be acceptable for shallow service runs.

2. ***National Joint Utilities Group ("NJUG") Guidelines for the Planning, Installation and Maintenance of Utility Apparatus in Proximity to Trees – Issue 2: Section 4.1 (How to avoid damage to trees – Below ground) advises:***
   "4.1.3 Realignment: Whenever possible apparatus should always be diverted or re-aligned outside the Prohibited or Precautionary Zones. Under no circumstances can machinery be used to excavate open trenches within the Prohibited Zone. Where works are required for the laying or maintenance of any apparatus within the Prohibited

© Barrell Tree Consultancy 2020

or Precautionary Zones there are various techniques available to minimise damage. Acceptable techniques in order of preference are; a) Trenchless: Wherever possible trenchless techniques should be used. The launch and reception pits should be located outside the Prohibited or Precautionary Zones. In order to avoid damage to roots by percussive boring techniques it is recommended that the depth of run should be below 600mm. Techniques involving external lubrication of the equipment with materials other than water (e.g. oil, bentonite, etc.) must not be used when working within the Prohibited Zone. Lubricating materials other than water may be used within the Precautionary Zone following consultation and by agreement.

b) Broken Trench – Hand-dug: This technique combines hand-dug trench sections with trenchless techniques if excavation is unavoidable. Excavation should be limited to where there is clear access around and below the roots. The trench is excavated by hand with precautions taken as for continuous trenching as in (c) below. Open sections of the trench should only be long enough to allow access for linking to the next section. The length of sections will be determined by local conditions, especially soil texture and cohesiveness, as well as the practical needs for access. In all cases the open sections should be kept as short as possible and outside of the Prohibited Zone. c) Continuous Trench – Hand-dug: The use of this method must be considered only as a last resort if works are to be undertaken by agreement within the Prohibited Zone. The objective being to retain as many undamaged roots as possible."

© Barrell Tree Consultancy 2020

Landscaping in root protection areas

This document is only a summary of its subject matter. You should not rely on this general guidance in isolation, and you should always seek detailed advice from an appropriate expert in relation to specific circumstances before any action is taken or refrained from. You may download and republish (in its full format) and print copies of the guidance – but you must not adapt any guidance.

barrell
TREE CONSULTANCY

© Barrell Tree Consultancy 2020

SGN 12

Summary guidance for site operatives

Landscaping in root protection areas

Administration

- Unauthorised damage to protected trees is a criminal offence and could lead to enforcement action.
- Work under the normal site risk assessment procedures and comply with the wider site safety rules.
- Brief operatives entering root protection areas (RPAs) by the supervising arboriculturist before work starts.

Other relevant SGNs

- Monitor works in RPAs by the supervising arboriculturist (See *SGN 1 Monitoring tree protection*).
- Design access to avoid soil compaction (See *SGN 3 Ground protection*).
- Minimise excavation into original undisturbed soil (See *SGN 7 Excavation in root protection areas*).
- Install hard landscaping according to *SGN 9 Installing/ upgrading surfacing in root protection areas*, and *SGN 10 Installing structures in root protection areas*.

Important reminders

- No heavy mechanical cultivation such as ploughing or rotavation.
- Do not fill above the original ground levels within the RPAs of retained trees until the precise depth of fill has been agreed and authorised by the supervising arboriculturist.
- Never raise soil levels to leave soil touching a trunk that was previously exposed to the air.

© Barrell Tree Consultancy 2020

SGN

12

Explanatory notes and examples

Landscaping in root protection areas

Purpose

SGN 12 describes the practical requirements for soft and hard landscaping to avoid damage to retained trees, based on the recommendations in *BS 5837 (8)* and *BS 3998 (6.3)*. It assumes that the design and technical specifications prepared for the site contractors comply with the relevant British Standards, and in particular, *BS 8545 (2014) Trees: from nursery to independence in the landscape – Recommendations*.

Note: Soft landscaping includes the re-profiling of existing soil levels and covering the soil surface with new plants (grass or shrubs) and/or an organic mulch. Any new hard surfacing and structures will be installed as described in *SGN 9 Installing surfacing in root protection areas* and *SGN 10 Installing structures in root protection areas*.

SGN 12-01
The RPA of this tree was not effectively protected during construction and excessive compaction of the soil meant it died soon after this turf covered up the damage.

© Barrell Tree Consultancy 2020

SGN 12

Explanatory notes and examples

Landscaping in root protection areas

SGN 12-02
Soil should not be heaped against trunks and no level changes should occur within 1m of the trunk unless authorised by the supervising arboriculturist. The raised soil levels against this trunk and across the RPA caused the decline of this tree.

SGN 12-03
Healthy mature trees had adjacent soil levels raised by over a metre in their RPAs because provision was made for load spreading and aeration.

SGN 12-04
This tree had tarmac parking within its RPA that was removed and replaced with an organic mulch near the trunk and limited no-dig surfacing on the outer edges of its RPA.

© Barrell Tree Consultancy 2020

Technical references

Due to copyright restrictions, the relevant British Standard clauses are summarised, not quoted, as follows:

1. ***BS 5837 (2012) Trees in relation to design, demolition and construction – Recommendations:*** Clause 8 (Site works, landscape operations and management) recommends:

   - 8.4 Avoid soil compaction around existing trees and in areas where new planting is proposed. Where soil compaction has occurred within RPAs, arboricultural advice should be taken on how to mitigate risk of further damage to roots before carrying out any remedial or other works. Any cultivation within RPAs should be undertaken carefully by hand, but no heavy mechanical cultivation such as ploughing or rotavation should occur. Decompaction measures include forking, spiking, soil augering and tilthed radial trenching should be carried out with care to minimise the risk of further damage to roots.

2. ***BS 3998 (2010) Tree work – Recommendations:*** Clause 6.3 (Aeration/decompaction) recommends:

   - 6.3 Decompaction works should be controlled so that major roots greater than 2.5cm in diameter are not damaged. Avoid extensive cultivation such as ploughing or rotavation in RPAs.

© Barrell Tree Consultancy 2020

Additional resources

PDF Versions of the Site Guidance Notes

PDF versions of the individual site guidance notes are available for download from scanning the relevant QR codes below.

SGN 1: Monitoring tree protection

SGN 2: Fencing protected trees

SGN 3: Ground protection

SGN 4: Pollution control

SGN 5: Site cranes and piling rigs

SGN 6: Height restrictions

SGN 7: Excavation in root protection areas

SGN 8: Removing surfacing and structures in root protection areas

SGN 9: Installing/ upgrading surfacing in root protection areas

SGN 10: Installing structures in root protection areas

SGN 11: Installing services in root protection areas

SGN 12: Landscaping in root protection areas

© Barrell Tree Consultancy 2020

barrell
TREE CONSULTANCY

Field House
Fordingbridge Business Park
Fordingbridge
Hampshire
SP6 1BD

Telephone
01425 651470

Email
info@barrelltreecare.co.uk

Website
www.barrelltreecare.co.uk

v3.0

© Barrell Tree Consultancy 2020

ISBN: 978 1 9164551 0 8