RMTTree Consultancy Ltd

Key	Address
	Land between 26 and 32 Padnell Road, Cowplain, PO8 8DZ

Title	Tree Protection Plan	Root Protection Area	
Drawing no.	RMT565 - TPP - Rev B	Canopy Spreads	
Scale	1:200 @ A2	Tree Protection Fencing	
Date	July 2023	Construction Exclusion Zone	CEZ

0 5 10

N

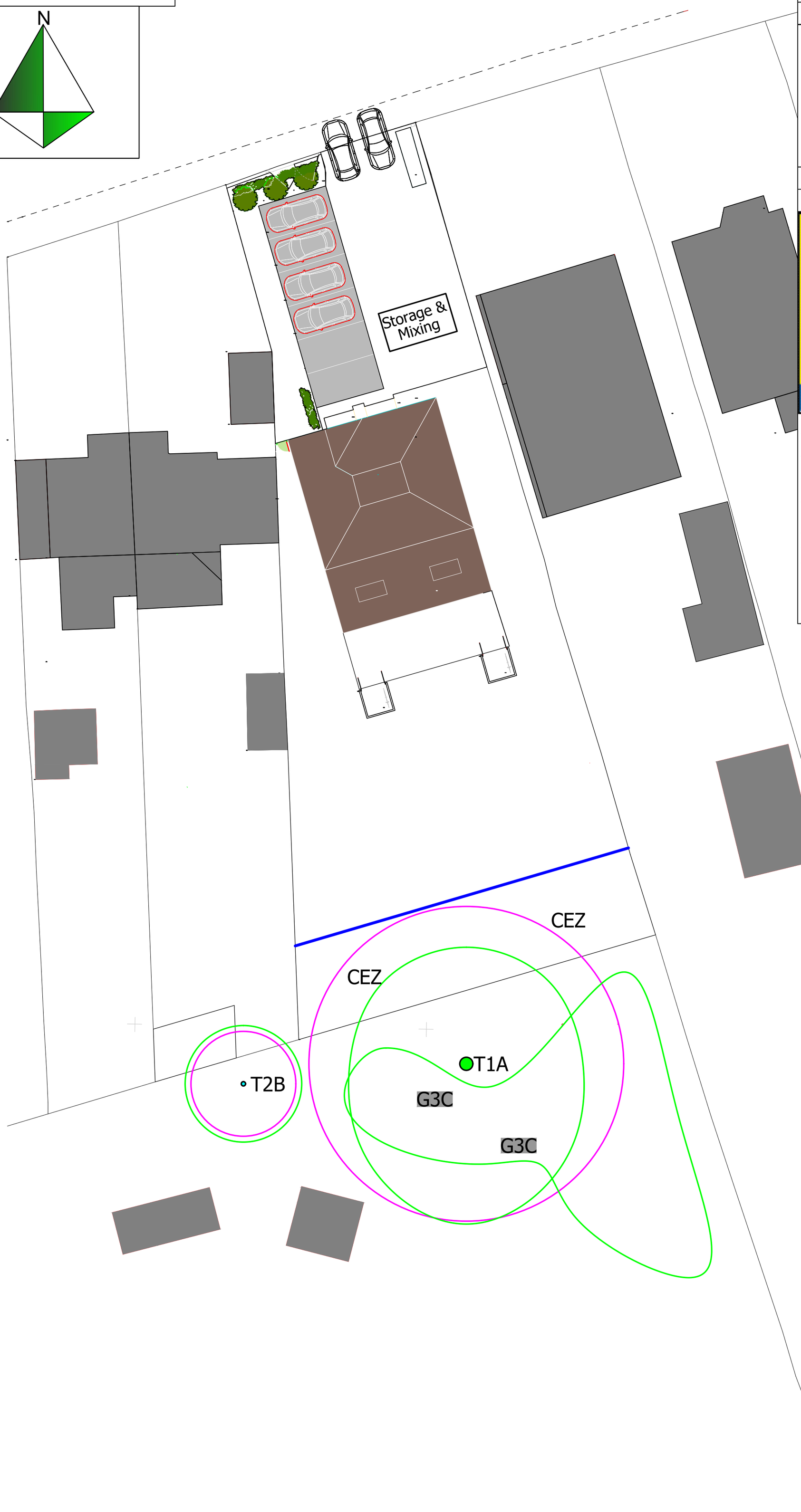

Tree Protection Fencing

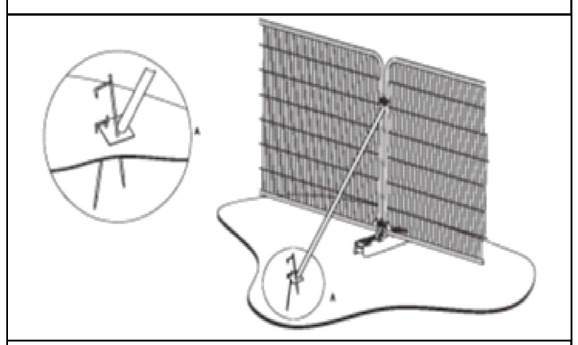

a) Stabilizer strut with base plate secured with ground pins

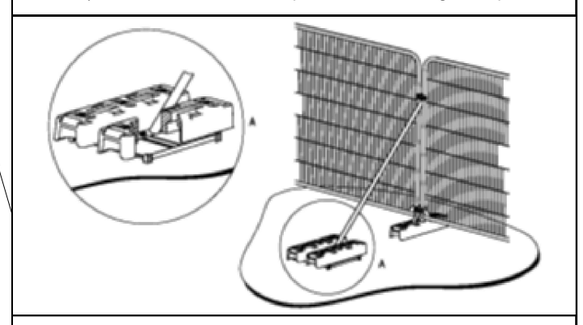

b) Stabilizer strut mounted on block tray

Images taken from British Standard 5837:2012 - Trees in relation to design, demolition and construction - Recommendations

TREE PROTECTION AREA

TREES ENCLOSED BY THIS FENCE ARE PROTECTED BY PLANNING CONDITIONS AND ARE SUBJECTS OF A TREE PRESERVATION ORDER (TOWN & COUNTRY PLANNING ACT 1990)

CONTRAVENTION OF TREE PRESERVATION ORDERS MAY LEAD TO **CRIMINAL PROSECUTION**

THE FOLLOWING **MUST** BE OBSERVED BY ALL PERSONS:-

- THE PROTECTIVE FENCING MUST NOT BE REMOVED
- NO PERSON SHALL ENTER THE PROTECTED AREA
- NO MACHINE OR PLANT SHALL ENTER THE PROTECTED AREA
- NO MATERIALS SHALL BE STORED IN THE PROTECTED AREA
- NO SPOIL SHALL BE DEPOSITED IN THE PROTECTED AREA
- NO EXCAVATION SHALL OCCUR IN THE PROTECTED AREA

ANY INCURSION INTO THE PROTECTED AREA MUST BE WITH THE WRITTEN PERMISSON OF THE LOCAL PLANNING AUTHORITY

KEEP OUT!

Root Protection Area and Construction Exclusion Zones

- All tree protection measures will be erected as agreed within the BS5837:2012 Arboricultural Survey, Implications Assessment and Arboricultural Method Statement;
- There will be access to foot or vehicular traffic within fenced off areas once development (including demolition) has commenced;
- Once development (including demolition) has commenced the tree protection must not be moved for any reason without the written consent of the local planning authority;
- There will be no excavations, storage of materials, mixing of materials or dumping of spoil within construction exclusion zones (CEZ) unless agreed in writing with the local planning authority;
- All caustic substances e.g. oil, diesel, cement etc will not be stored within 2m of CEZs;
- No fires will be lit within 10m of CEZs or tree canopies;
- Protection area signage will be displayed on protective barriers for the duration of development;

PLEASE BE AWARE – The tree protection specified on this tree protection plan and within the Arboricultural Survey, Implications Assessment and Arboricultural Method Statement document are conditioned to be erected. Failure to protect trees in full accordance with the approved scheme is likely to result in local planning authority taking enforcement action, including prosecution.