SJ Stephens Associates

ARBORICULTURAL, LANDSCAPE & MANAGEMENT CONSULTANTS

Savernake Barn
Stokke Common
Great Bedwyn
Marlborough
Wiltshire SN8 3LL
Tel: 01672 871 862
www.sjstephens.co.uk
e: info@sjstephens.co.uk

Arboricultural Method Statement

- Tree Survey
- Tree Protection Plan
- Method Statement

For:-

Phase 2 erection of new flexible floorspace and associated works

At:-

Langstone Technology Park
2B Langstone Road
Havant
PO9 1SA

On behalf of:-

XLB Property Ltd
Silver House
2nd Floor
31-35 Beak Street
London W1F 9DP

Prepared by:

Catherine Fforde, HND Hort,
Dip Arb L4(ABC), MCIHort, MArborA
Email: catherine@sjstephens.co.uk

Approved by:

Simon Stephens MA Oxon, Dip Arb(RFS), MArborA, C Env. MICFor
Email: simon@sjstephens.co.uk

Survey Dates:	7th June 2021 & 12th November 2021
Report Date:	24th July 2024
Project no:	1746

CONTENTS

1 BACKGROUND
2 SURVEY DETAILS AND SCOPE
3 SURVEY LIMITATIONS
4 LEGAL PROTECTION OF TREES
5 ARBORICULTURAL METHOD STATEMENT
6 ARBORICULTURAL SITE SUPERVISION
7 REFERENCES

Appendices
A Tree Protection Plan: drawing no: 1746-03
B Tree Schedule
C BS 5837:2012 - Trees in relation to design, demolition and construction, Table 1
D Tree Protection Fencing Detail
E Site photos
F Proposed Site Plan

1 BACKGROUND

1.1 Outline Planning Permission (ref: APP/22/00172) has been granted for phased demolition of existing buildings and the erection of new flexible employment floorspace and associated works with all matters reserved at Langstone Technology Park, subject to number of planning conditions. This Arboricultural Method Statement is intended to satisfy planning condition number 10, which relates to the tree protection measures, for the Phase 2 development. It develops the Arboricultural Impact Assessment, dated 7th January 2022, produced by SJ Stephens Associates, which supported the planning application.

1.2 Tree details are shown in the Tree Schedule in Appendix B and on the Tree Protection Plan in Appendix A. This plan also includes tree protection measures, which are specified in the Arboricultural Method Statement in section 5 below. Arboricultural supervision required during construction is detailed in section 6.

1.3 The tree survey was undertaken, and this report has been prepared by Catherine Fforde HND Hort, Dip Arb L4(ABC), MCIHort, MArborA and approved, by Simon Stephens MA Oxon, Dip Arb (RFS), MArborA, C Env, MICFor a Registered Consultant with the Arboricultural Association, with over 20 years relevant experience.

1.4 This survey and report have been prepared in accordance with recommendations provided in BS 5837:2012, Trees in relation to design, demolition and construction - Recommendations.

1.5 Documentation supplied:

- Topographical Survey
- SJ Stephens Associates, Arboricultural Impact Assessment, dated 7th January 2022
- PRC, Langstone Phase 2 Proposed Site Plan: drawing no: 11629 PL 004 A
- Havant Borough Council Decision Notice, dated 22 December 2023

2 SURVEY DETAILS AND SCOPE

2.1 The site survey included trees and shrubs, within influencing distance of the proposed development, with a stem diameter over 75mm at 1.5m height, as shown located on the Tree Protection Plan, included as Appendix A.

2.2 Tree inspection took place from ground level with the use of binoculars, sounding hammer and metal probe using the Visual Tree Assessment method (Mattheck & Breloer 1994). The presence and condition of bark and stem wounds, cavities, decay, fungal fruiting bodies and any structural defects that could increase the risk of structural failure were noted.

2.3 Tree diameters were measured using a girthing tape and tree heights were measured using a hypsometer. Where use of a tape was restricted by site factors, diameters were estimated, with the diameter recorded in the tree schedule as eg “est 300”.

2.4 At the time of the survey, the weather was overcast, but with no restrictions to visibility. Broadleaf trees were partially in leaf. There were no limitations to access around the trees.

2.5 The suitability of trees for inclusion in the future development was considered, in particular considering the safe useful life expectancy, and sustainability, of trees on the site after development is completed.

2.6 Tree details are shown on the Tree Protection Plan included as Appendix A. Tree locations have been taken from the topographical survey provided. Where not included on the topographical survey, they have been determined by measuring distances from features shown on the plan, using a laser measuring device. The following information was recorded for each tree, and is shown in the Tree Schedule included as Appendix B:

- **Number:** an identity number for each tree, prefixed with a “T”, which cross references locations shown on the plan with the schedule in Appendix B. Where a number of trees are located close together and are similar in character and management requirements, they have been treated as a Group under a single number, prefixed with a “G”.
- **Species**: common name.
- **Tree height**: approximate height in metres.
- **Stem diameter**: diameter in millimetres, taken at 1.5m above ground. Where there are a number of stems, stem diameters are recorded in the condition column.

- **Branch spread**: approximate spread in metres to N,S,E and W of the trunk. The approximate branch spread is drawn on the plan.
- **Canopy clearance**: approximate height of the canopy above ground. Where a significant, low lateral branch is present, its height and direction of growth is included in the Condition column.
- **Age class**: Young, Semi-mature, Early mature, Mature, Over-mature, Veteran.
- **Condition**: features that affect the safe useful life expectancy and amenity of the tree, including the presence of decay or any physical defect.
- **Management Recommendations**: recommendations to ensure the health and safety of the tree, within the future development.
- **Estimated Remaining Contribution**: <10 years, 5-15 years, 10-20 years, 15-30 years, 20-40 years, >40 years.
- **Category grading**: tree classification taken from BS 5837:2012, Trees in relation to design, demolition and construction (see Appendix C for details), as follows:
    - Category U: Unsuitable for retention, trees with less than 10 years life expectancy, normally recommended for removal (Red)
    - Category A: high quality trees, able to make a substantial contribution for at least 40 years, normally retained unless there is an over-riding reason for removal and appropriate mitigation. (Green)
    - Category B: moderate quality trees, able to make a significant contribution for at least 20 years, normally retained. (Blue)
    - Category B/C: an intermediate category between categories B and C (not specifically described in BS5837). Trees, which should be retained wherever possible, providing retention does not unreasonably constrain the layout. (Blue)
    - Category C: low quality, in adequate condition to remain for at least 10 years, or young trees <150mm stem diameter. Trees which can be removed to allow the desired layout or new planting. (Grey)

  For category A, B and C trees, a subcategory has been allocated, providing information on the reasons for selection of a specific category, as follows:
    - Subcategory 1: mainly arboricultural values.
    - Subcategory 2: mainly landscape values.
    - Subcategory 3: mainly cultural values, including conservation.
- Trees have been classified irrespective of the possible proximity to future construction. The BS 5837 category is colour coded, as indicated above, on the plan included as Appendix A.
- **Protection Distance:** the protection distance in metres required to provide the Root Protection Area recommended in BS 5837, assuming a circular area centred on the tree.
- **Root Protection Area (RPA):** the area in m^2, as recommended in BS 5837, to provide sufficient rooting area to ensure tree survival and which, in most situations, should be fenced off to prevent root damage from construction activities.

3 SURVEY LIMITATIONS

3.1 No internal decay devices, or other invasive tools to assess tree condition, were used.

3.2 No soil excavation or root inspection was carried out.

3.3 This survey has not considered the effect that trees or vegetation may have on the structural integrity of future building through subsidence or heave.

3.4 The tree survey has been undertaken for planning purposes. Although any obvious structural defects have been noted, a Tree Hazard Assessment has not been carried out. Mature trees close to highly populated areas or public highways should normally be checked for safety annually by a suitably qualified person.

4 LEGAL PROTECTION OF TREES

4.1 The Havant Borough Council website was viewed on 17.11.2021, which showed that there are Tree Preservation Orders on a group of trees in the northwest corner of Langstone Technology Park and on individual trees alongside a public footpath to the southwest. The site is not within a Conservation Area.

4.2 Once planning permission has been granted, provided the application clearly shows any trees to be removed or pruned, this overrides protection provided by Tree Preservation Orders, provided the work is necessary to implement the approved development. If not essential, a separate tree work application will need to be submitted for trees protected by a Tree Preservation Order. For Phase 2, only tree work essential to implement the approved scheme has been specified.

4.3 No tree work that is not clearly shown on the approved site plan and/or supporting documentation must be undertaken without the approval of the Local Planning Authority.

5 ARBORICULTURAL METHOD STATEMENT

5.1 Site Overview

5.1.1 Outline planning permission has been granted for phased demolition of existing buildings and the erection of new flexible use employment floorspace and associated works at Langstone Technology Park. The proposed site plan for Phase 2 is included as Appendix F and has been added to the survey drawing, along with tree details, to create the Tree Protection Plan attached as Appendix A.

5.1.2 The Phase 2 site is within an area currently used for car parking. Access to the site is via the existing internal access road. None of the existing trees are being retained within the Phase 2 site.

5.1.3 Trees are located across the technology park, within car parks and in soft landscape areas around buildings and the site periphery. For the most part, trees within the car park areas are of small size and low quality. Trees along the eastern site boundary are contributing in a more significant way to landscape greening, which is further enhanced by the presence of a grassed earth bund.

5.1.4 When surveyed during the summer trees within the site were exhibiting signs of water stress, most markedly where trees are exposed to wind in locations that are unprotected by buildings or shelterbelts. In some cases, foliage damage was so great that the natural life expectancy of the trees was considered to have been significantly reduced.

5.1.5 Alongside the western site access road is a line of eucalyptus and Leyland cypress trees. At the northern end of the tree line trees have been damaged by a fire. The fire damage is likely to necessitate their future removal. A tree hazard assessment has been recommended to investigate the extent of the damage and to consider future management for safe retention of other trees.

5.2 Construction Access and Site Set up

5.2.1 All construction traffic will enter the site using the access road off Brookside Road, on the west side of the park. Trees adjacent to the access have a canopy clearance of approximately 4m, which will not restrict access.

5.2.2 Materials will be stored within the Phase 2 site.

5.2.3 Storage of cement, concrete, oil, fuel, bitumen, chemicals or materials – such as treated timber products - that could have toxic leachate must not be permitted within the Root Protection Area of any retained trees, nor in any position where the slope of the ground could lead to contamination of the Root Protection Area.

5.2.4 Site offices will be located within the Phase 2 site.

5.3 Tree Work

5.3.1 Twenty-five trees are proposed for removal to facilitate the Phase 2 development, as detailed in the Tree Schedule attached in Appendix B.

5.3.2 The tree removals for this part of the site are the same as in the approved Arboricultural Impact Assessment, dated 7th January 2022, which supported the outline planning application.

5.3.3 All tree work must be undertaken to the standards set out in BS 3998:2010 Tree work – Recommendations.

5.4 Root Protection Areas

5.4.1 Root Protection Areas are shown for all trees in the Tree Schedule included as Appendix B. They are also shown for all retained trees, as circular areas centred on the trunk, on the Tree Protection Plan included as Appendix A. Where there are physical obstructions to root growth the Root Protection Area should be shown as an equivalent area that is more likely to reflect actual root growth. The Root Protection Area shows the area around a tree in which all construction activity must normally be excluded, unless appropriate protection measures are implemented.

5.5 Tree Protection Fencing

5.5.1 Tree Protection Fencing must be erected where shown on the Tree Protection Plan, included as Appendix A. This will provide full protection of the retained trees outside the eastern boundary of the Phase 2 site, other than for the areas hatched cyan on the Tree Protection Plan, indicating Ground Protection Areas, where roots must be protected, as described in section 5.6 below.

5.5.2 Tree works can be completed before Tree Protection Fencing is erected, however no contractors plant or vehicles must be allowed to track within the Root Protection Areas unless ground protection panels are laid.

5.5.3 Tree Protection Fencing must be from weldmesh panels, at least 2m high, securely fixed, with wire or scaffold clamps, to a rigid framework. This framework must be constructed from scaffold tubes with vertical tubes, at a maximum interval of 3m and driven into the ground at least 0.6m. The structure must be well braced to resist impacts, constructed as per Figure 2 of BS5837:2012, which is reproduced in Appendix D. Alternatively, weldmesh panels can be supported on blocks, providing the blocks are pinned to the ground with road pins, or similar, and the panels are braced, as per Figure 3 of BS5837:2012, which is also reproduced in Appendix D.

5.5.4 Site hoarding can be used instead of Tree Protection Fencing if it is of solid timber construction and at least 2m in height. Where site hoarding is within the Root Protection Areas of trees, post holes must be dug by hand and heavy duty polythene must then be used to line holes before concrete is poured, to prevent the toxic effects of concrete on tree roots. Alternatively, the hoarding can be supported by ballast boxes to avoid having to excavate.

5.5.5 After erection of Tree Protection Fencing, two days' notice must be given to the Local Planning Authority before demolition or construction, including any ground work, starts on site.

5.5.6 Tree Protection Fencing must be maintained and retained for the duration of the works, or until such time as agreed in writing with the arboricultural consultant or the Local Planning Authority.

5.5.7 Weatherproof notices must be fixed to the Tree Protection Fencing, and maintained, stating:-

TREE PROTECTION AREA
KEEP OUT
TREES ENCLOSED BY THIS FENCE ARE PROTECTED BY PLANNING CONDITIONS
CONTRAVENTION MAY LEAD TO CRIMINAL PROSECUTION
THE FOLLOWING MUST BE OBSERVED BY ALL PERSONS:

- The Protection Fence must not be moved
- No person or machine must enter the area
- No materials or spoil must be deposited
- No excavation must be permitted

ANY INCURSION INTO THE PROTECTED AREA MUST BE WITH THE WRITTEN PERMISSION OF THE LOCAL PLANNING AUTHORITY

5.6 Ground Protection Areas

5.6.1 The Ground Protection Areas, which are hatched cyan on the Tree Protection Plan, contain hard surfacing which is protecting any underlying roots and which must stay in place during the construction period unless further protection measures are implemented.

5.6.2 Hard surfacing in Ground Protection Areas can be replaced if the existing sub-base remains in place and if the new surfacing is permeable.

5.6.3 If the existing sub-base is removed, ground protection must be laid immediately and then No-Dig construction, using a three-dimension cellular confinement system, used for the build up. No excavation must be permitted beneath the base course in these areas.

5.7 Services

5.7.1 All drainage runs, attenuation areas and other new services have been kept outside the Root Protection Areas of trees.

5.8 Landscaping

5.8.1 Landscape works carried out within Root Protection Areas must be undertaken with great care so as not to damage shallow roots.

5.8.2 Mechanical cultivation eg. rotovating must not be used within the Root Protection Areas of trees. Instead, if required, areas can be dug over by hand, carefully working around any roots found. Although areas can then be seeded or planted with shrubs, this will inevitably lead to competition for moisture and nutrients. Spreading well composted bark mulch or wood chip within Root Protection Areas is preferable to provide the optimal environment for important or vulnerable trees.

5.9 General measures

5.9.1 No construction activity whatsoever, including routing of underground services, storage of materials or on-site parking, must be allowed within Root Protection Areas, other than that specifically described above.

5.9.2 Fires must not be lit in a position where their flames could extend to within 10m of foliage, branches or trunk.

5.9.3 If any tree shown for retention is removed, uprooted or destroyed, another tree must be planted in the same location, at a size and species to be agreed in writing with the Local Planning Authority.

5.9.4 A copy of this report and the Tree Protection Plan must be kept on site and must be fully understood by the Site Agent.

5.10 Bat roosts

5.10.1 The current legislation makes it a criminal offence to disturb, damage or destroy any bat roost or hibernation area. Contractors must be reminded of their responsibilities and should contact the relevant authorities if any signs of bats are found.

5.11 Birds

5.11.1 The current legislation makes it a criminal offence to disturb nesting birds. The nesting season is generally assumed to be from 1st March to 31st July, however this can vary depending on species and location. During these months a careful inspection must be made before work commences and works must be postponed if active nests are found.

6 ARBORICULTURAL SUPERVISION

6.1 Key personnel

- Contractor: TBA – Site Agent: TBA
- Arboricultural Consultant: Catherine Fforde tel: 0776537052, email: catherine@sjstephens.co.uk
- Architect: PRC
- Client: XLB Property Ltd
- Tree Officer: @Havant Borough Council

6.2 Responsibilities

6.2.1 It must be the responsibility of the Site Agent to ensure that the Arboricultural Method Statement is adhered to at all times by site operatives, contractors and hauliers. Tree protection arrangements must form part of the site induction for all staff and sub-contractors.

6.2.2 If any problems arise, the Site Agent must inform the arboricultural consultant who must assess the situation and make recommendations accordingly. If the Arboricultural Method Statement requires revision, the Tree Officer must be informed and approval must be given.

6.2.3 A copy of the Arboricultural Method Statement must be kept on site and must be fully understood by the Site Agent.

6.3 Arboricultural Consultant Input: throughout the development

6.3.1 The arboricultural consultant must visit site and/or advise on any arboricultural issues at the request of the Local Planning Authority, client, architect or contractor.

6.3.2 The details of each site visit must be recorded using a site visit proforma, with copies circulated to the contractor, client, architect and the local authority Tree Officer, within three working days of the visit.

6.4 Variations and Incidents

6.4.1 Any changes to the proposed site plans, including changes to service runs or construction access, must be notified to the arboricultural consultant. If changes are within the Root Protection Areas, or if trees could be affected a revised Arboricultural Method Statement must be prepared and agreed by the Local Planning Authority before work starts.

6.4.2 Any unexpected incidents on site that could affect trees must be notified to the arboricultural consultant immediately. Such incidents include, for example, finding roots outside areas of Tree Protection Fencing, spillage of any contaminants or damage occurring to the stems or branches of trees.

6.4.3 If the arboricultural consultant considers that the incident could affect the future health of trees, the Local Planning Authority must immediately be informed. In any case, the arboricultural consultant must provide guidance to site staff and, if necessary, attend site. Details of all incidents, and any action taken in mitigation must be included in the next site visit report.

7 REFERENCES

- *BS5837:2012 Trees in relation to design, demolition and construction – Recommendations.*
- *BS3998:2010 Tree Work. Recommendations.*

APPENDIX A

SJ Stephens Associates
Savernake Barn, Stokke Common
Great Bedwyn
Marlborough
Wiltshire SN8 3LL
01672 871862
www.sjstephens.co.uk

JOB TITLE	LANGSTONE TECHNOLOGY PARK – PHASE 2
DRAWING TITLE	TREE PROTECTION PLAN
DRAWING NUMBER	1746–03
REV	
REVISIONS	
SCALE	1:400atA1
DATE	JUL 24
DRAWN BY	CF

Tree/ Group No.	Species	Height (m)	Stem Diam. at 1.5m (mm)	Branch Spread (m)				Canopy Cleara -nce (m)	Age Class	Observations	Management Recommendations	Estimated Remaining Contribution (years)	BS 5837 Category Grading	Protect -ion Distnce (m)	Root Protect. Area (m2)
				N	S	E	W								
T1	Norway maple	9.5	290	3	3	3	2.5	2.5	Early mature	Deadwood throughout low to mid crown. Only moderate vigour.	Remove to facilitate devopment.	10-20	C2	3.5	38
T2	Norway maple	8	260	3	3	3.5	2.5	2.0	Early mature	Small areas of dieback. Leaf scorch.	Remove to facilitate devopment.	10-20	C2	3.1	31
T3	Norway maple	11	420	4	3	5	3.5	3.0	Early mature	Extensive foliage damage.	Remove to facilitate devopment.	5-15	C2	5.0	80
T4	Lime	7	240	2	3	4	3	1.5	Semi-mature	Main stem bifurcates at 2.5m with stems growing together to 3m - poor structure. Low limbs removed. Leaf scorch.	Remove to facilitate devopment.	15-30	B2	2.9	26
T5	Lime	7.5	230	3.5	3	4	3	1.1	Semi-mature	Low limbs removed. Foliage damaged.	Remove to facilitate devopment.	15-30	B2	2.8	24
T6	Rowan	3	100	1.5	0.5	1.5	1	1.8	Semi-mature	Dieback throughout crown. Foliage damage.	Remove.	<10	U	1.2	5
T7	Rowan	3.5	110	1.5	1	1.5	0.5	1.8	Semi-mature	Low vigour. Pruning wound at 0.5m, with stem shoots.	Remove to facilitate devopment.	5-15	C2	1.3	5
T8	Rowan	4	150	2.5	1	2	1.5	2.0	Semi-mature	Slight lean to north. Dieback in upper crown.	Remove.	<10	U	1.8	10
T9	Rowan	3.5	90	1.5	1	1	1.5	2.0	Semi-mature	Low vigour and minor deadwood throughout crown. Foliage damage.	Remove.	<10	U	1.1	4
T20	Purple plum	5	200	4	3	4.5	2	1.8	Early mature	Crown break at 1.4m, four stems - 70, 70, 80 & 150mm. Dieback through crown. Foliage scorched.	Remove.	<10	U	2.4	18
T21	Thorn	3.5	150	1	1	1.5	1.5	1.7	Early mature	Paul's Scarlet'. Two stems from 1.2m - 95 & 110mm. 7 stems removed. Very low vigour. Foliage scorched.	Remove.	<10	U	1.8	10
T22	Pear	5.5	130	1	1	1	1	2.0	Semi-mature	Scorched foliage.	Remove to facilitate devopment.	5-15	C2	1.6	8
T23	Cockspur thorn	3.5	190	3.5	2	4	3	1.6	Early mature	Two stems from 1.4m - 110 & 160mm. Low vigour and foliage scorch.	Remove to facilitate devopment.	5-15	C2	2.3	16
T65	Pear	6	170	2	2	2	2	2.0	Semi-mature	Good form and structure.	Remove to facilitate devopment.	20-40	B2	2.0	13
T66	Pear	7	200	2.5	2.5	2.5	2.5	2.0	Semi-mature	Good form and structure.	Remove to facilitate devopment.	20-40	B2	2.4	18
T67	Pear	6	140	1.5	1.5	1.5	2.5	2.0	Semi-mature	Good form and structure.	Remove to facilitate devopment.	20-40	C2	1.7	9
T68	Pear	5	120	2	1.5	1.5	1.5	2.0	Semi-mature	Slight lean to northeast.	Remove to facilitate devopment.	20-40	C2	1.4	7
T105	Norway maple	13	480	5	4	5	4	1.8	Mature	On slight mound. Good form and structure.		20-40	B2	5.8	104
T106	Lime	12	500	5.5	4	6	5	1.5	Early mature	Lower crown reduced - now congested with twiggy growth. Good vitality.	Clear twiggy growth from lower crown.	>40	B2	6.0	113
T107	Norway maple	13.5	560	8.5	5.5	7.5	5	2.0	Mature	Lower crown reduced.		20-40	B2	6.7	142
T108	Silver maple	13.5	est 450	4	5	6	3	3.0	Early mature	Ivy over stem. In dense undergrowth - base not inspected. Limbs to west removed. Vigorous tree.		20-40	B2	5.4	92
T109	Norway maple	14	750	8	3	5	8	1.5	Mature	Beginning to decline. Water filled pocket between stems. Major deadwood.		10-20	C2	9.0	254

Tree/ Group No.	Species	Height (m)	Stem Diam. at 1.5m (mm)	Branch Spread (m)				Canopy Cleara -nce (m)	Age Class	Observations	Management Recommendations	Estimated Remaining Contribution (years)	BS 5837 Category Grading	Protect -ion Distnce (m)	Root Protect. Area (m2)
				N	S	E	W								
T110	Norway maple	14	550	5.5	3.5	1.5	8	2.5	Mature	Crown swept to west. Old pruning wounds and broken branches. Extensive deadwood.		10-20	C2	6.6	137
T111	Norway maple	12.5	380	0	6	1	5.5	2.5	Mature	Asymmetric crown. Poor form. Minor deadwood.		15-30	C2	4.6	65
T112	Cherry	9	830 @ 1m	8	6	8	4	1.3	Mature	Crown break at 1.2m, with multiple stems above. Stem to southwest with decaying wound at 2.5m. Good vitality. Feature tree.		20-40	A2	10.0	311
T113	Cherry	9	740 @ 1m	5.5	6	7	5	2.5	Mature	Crown break at 1.2m. Occasional dead and broken branches but an attractive tree. Ivy. Elder growing through crown.	Remove section of ivy from base. Clear elder from under crown.	20-40	A2	8.9	248
T114	Cherry	10	830 @ 1.2m	7	4.5	6.5	5.5	3.0	Mature	Crown break at 1.5m. Low limbs removed leaving large wounds - beginning to occlude but likely decay entry points.	Remove to facilitate devopment.	15-30	B2	10.0	311
T115	Crab apple	3.5	150	2	1.5	2	2.5	2.5	Mature	Small stunted tree. Low limbs removed.	Remove to facilitate devopment.	5-15	C2	1.8	10
T116	Thorn	3	75	1	1	1	1	1.8	Semi-mature	Small stunted tree. Declining.	Remove to facilitate devopment.	<10	U	0.9	3
T117	Pear	6	140	1.5	1.5	1.5	1.5	1.8	Semi-mature	Good form and structure but low vigour.	Remove to facilitate devopment.	5-15	C2	1.7	9
T118	Norway maple	7.5	280	3.5	3	4	2	2.0	Early mature	Very large surface roots to east. Low vigour.	Remove to facilitate devopment.	10-20	C2	3.4	35
T119	Lime	7.5	330	3.5	3	3.5	3.5	2.5	Semi-mature	Lower crown reduced. Beginning to grow around lamp post. Secondary stem from 1.8m to west - tight fork. Good vitality.	Remove to facilitate devopment.	>40	B2	4.0	49
T120	Raywood ash	10	370	3	5	5	3.5	2.0	Early mature	Dead stem to northeast with fungal fruiting brackets. Poor crown structure - contorted and crossing branches.	Remove.	<10	U	4.4	62
T121	Raywood ash	8	440	4	5	4	4.5	1.5	Early mature	Dead stem to east. Poor structure with contorted and crossing branches.	Remove.	<10	U	5.3	88

BS 5837:2012, Table 1 Cascade chart for tree quality assessment

Category and definition	Criteria (including subcategories where appropriate)			Identification on plan
Trees unsuitable for retention (see Note)				
Category U Those in such a condition that they cannot realistically be retained as living trees in the context of the current land use for longer than 10 years	• Trees that have a serious, irremediable, structural defect, such that their early loss is expected due to collapse, including those that will become unviable after removal of other category U trees (e.g. where, for whatever reason, the loss of companion shelter cannot be mitigated by pruning) • Trees that are dead or are showing signs of significant, immediate, and irreversible overall decline • Trees infected with pathogens of significance to the health and/or safety of other trees nearby, or very low quality trees suppressing adjacent trees of better quality *NOTE Category U trees can have existing or potential conservation value which it might be desirable to preserve; see **4.5.7**.*			See Table 2
	1 Mainly arboricultural qualities	**2 Mainly landscape qualities**	**3 Mainly cultural values, including conservation**	
Trees to be considered for retention				
Category A **Trees of high quality** with an estimated remaining life expectancy of at least 40 years	Trees that are particularly good examples of their species, especially if rare or unusual; or those that are essential components of groups or formal or semi-formal arboricultural features (e.g. the dominant and/or principal trees within an avenue)	Trees, groups or woodlands of particular visual importance as arboricultural and/or landscape features	Trees, groups or woodlands of significant conservation, historical, commemorative or other value (e.g. veteran trees or wood-pasture)	See Table 2
Category B **Trees of moderate quality** with an estimated remaining life expectancy of at least 20 years	Trees that might be included in category A, but are downgraded because of impaired condition (e.g. presence of significant though remediable defects, including unsympathetic past management and storm damage), such that they are unlikely to be suitable for retention for beyond 40 years; or trees lacking the special quality necessary to merit the category A designation	Trees present in numbers, usually growing as groups or woodlands, such that they attract a higher collective rating than they might as individuals; or trees occurring as collectives but situated so as to make little visual contribution to the wider locality	Trees with material conservation or other cultural value	See Table 2
Category C **Trees of low quality** with an estimated remaining life expectancy of at least 10 years, or young trees with a stem diameter below 150 mm	Unremarkable trees of very limited merit or such impaired condition that they do not qualify in higher categories	Trees present in groups or woodlands, but without this conferring on them significantly greater collective landscape value; and/or trees offering low or only temporary/transient landscape benefits	Trees with no material conservation or other cultural value	See Table 2

Default specification for protective barrier

Figure 2

Key

1 Standard scaffold poles
2 Heavy gauge 2 m galvanised tube and welded mesh infill panels
3 Panels secured to uprights and cross-members with wire ties
4 Ground level
5 Uprights driven into the ground until secure (minimum depth 0.6 m)
6 Standard scaffold clamps

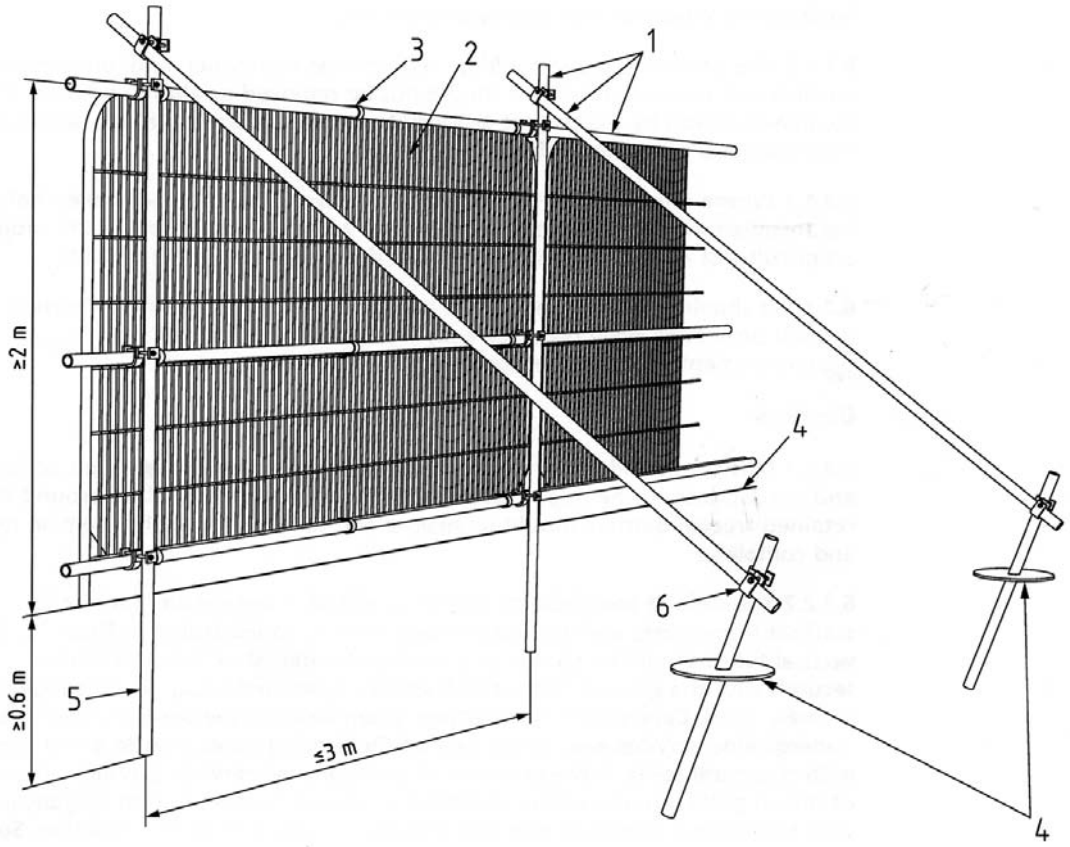

Examples of above-ground stabilising systems

Figure 3a
Stabiliser strut with base plate secured with ground pins

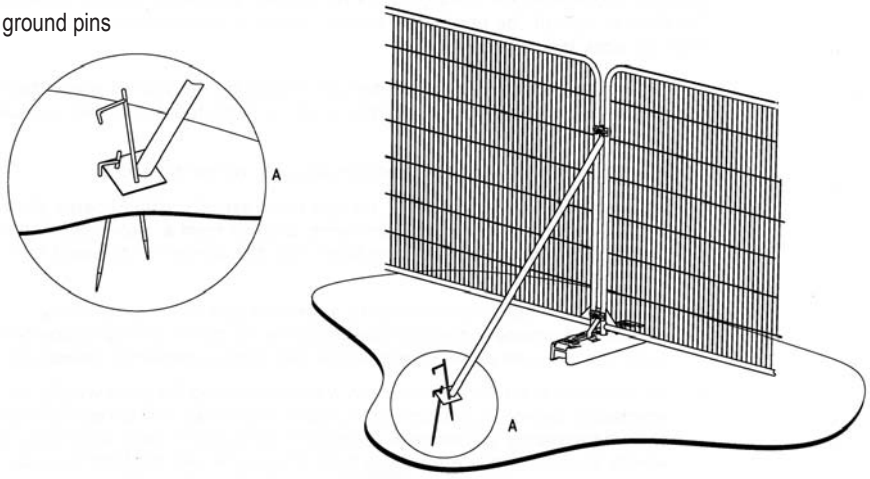

Figure 3b
Stabiliser strut mounted on block tray

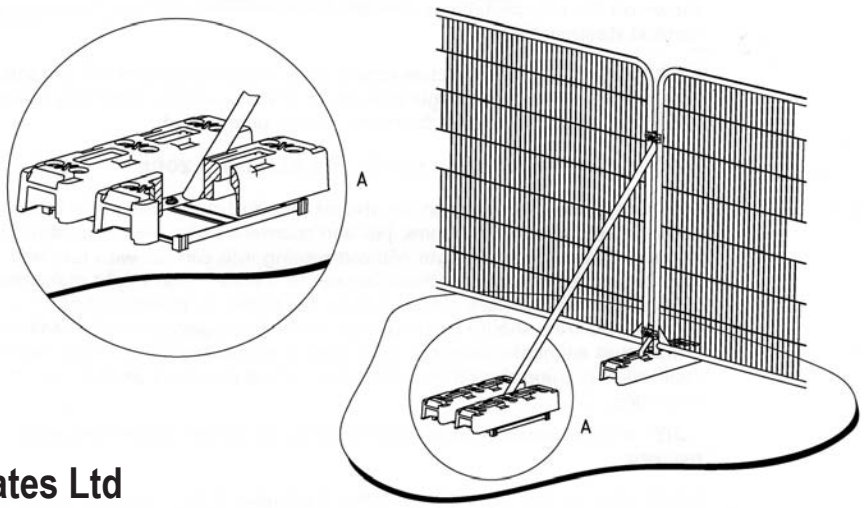

Above: View to southwest, across Phase 2 site.
Below: View to northwest, across Phase 2 site.

Above: View to north, along external access road to east of Phase 2 site.
Below: View to south, along external access road to east of Phase 2 site.
Trees in this area of the site are to be retained.

Figured dimensions only are to be used. All dimensions to be checked onsite. Differences between drawings and between drawings and specification or bills of quantites to be reported to the PRC Group.

© The copyright of the drawings and designs contained therein remains vested in the PRC Group

Revisions:		Drawn/Chkd:	Date:
REV A.	RMA BOUNDARY LINE AMENDED	MT	JUNE 24

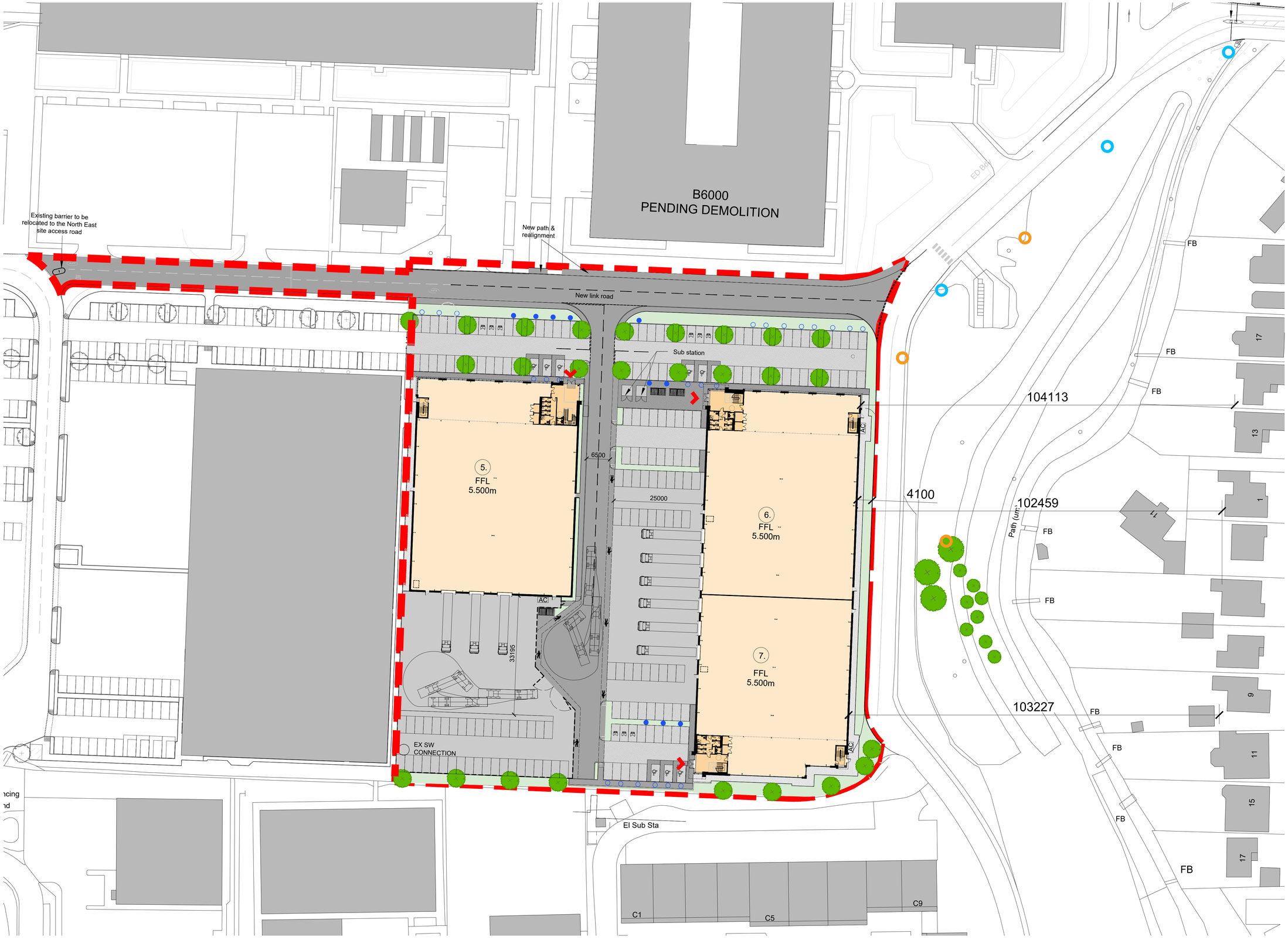

	GIA (m²)				
	Grnd	First	Total	GEA (m²)	GEA (ft²)
5.	2,618	476	3,094	3,229	34,756
6.	2,380	439	2,819	2,932	31,559
7.	2,041	385	2,426	2,529	27,221
T.	7,039	1,300	8,339	8,690	93,536

KEY

- PHASE 2 RMA BOUNDARY
- SOFT LANDSCAPE
- TARMACADAM SURFACING
- BRUSHED CONCRETE SERVICE YARD
- NATURAL BLOCK PAVING TO VEHICLE AREAS
- CHARCOAL BLOCK PAVING TO PEDESTRIAN AREAS
- WELL CONSOLIDATED GRAVEL
- TWO TIER CYCLE STORAGE AND SHELTER - PROVIDING 60 SPACES
- DOUBLE ELECTRIC VEHICLE CHARGING POINTS / DUCTS FOR FUTURE POINT
- CAR SHARE PARKING SPACES
- DROP KERB
- PROPOSED TREES
- EXISTING TREES TO BE RETAINED
- EXISTING TREES TO BE REMOVED
- INDICATIVE LOCATION OF BAT BOXES (AS PER ECOLOGIST SURVEY)
- INDICATIVE LOCATION OF BIRD BOXES (AS PER ECOLOGIST SURVEY)
- PEDESTRIAN PRIORITY ROUTE

PARKING PROVISIONS:

Revised layout proposes a total of 193 car parking spaces.

Unit 5 - 72 car parking spaces.
Unit 6/7 - 121 car parking spaces.

CYCLE STORAGE PROVISIONS:

Revised layout proposes a total storage for 60 cycles across the site.

0 10 20 30 40 50m
Scale 1:500

N

Client:
XLB LLP

Project:
LANGSTONE PHASE 2

Drawing Title:
PROPOSED SITE PLAN

PRC
12 Warren Yard,
Warren Park,
Milton Keynes,
MK12 5NW
01908 305 246

info@prc-group.com
www.prc-group.com

Scale @ A1:	Checked by:	Date:
1:500	ME	JAN 24

Job No:	Stage:	Drawing No:	Rev:
11629	PL	004	A

Issue Status:

- Construction ☐
- Preliminary ☐
- Information ☐
- Approval ☐
- Tender ☐

Architecture
Planning
Master Planning
Urban Design
Interiors
Landscape

Offices
Woking
London
Milton Keynes
Warsaw

PRC Architecture & Planning