CAMP FIELD, HAVANT

Tree Survey Report and Arboricultural Impact Assessment

JSL3850_770
Tree Survey and Arboricultural Impact Assessment
D
25 August 2022

rpsgroup.com

Quality Management

Version	Status	Authored by	Reviewed by	Approved by	Review date
-	For Planning	AB	BW	BW	April 2021
A	For Planning	AB	MW	DC	Nov 2021
B	For Planning	AB	MW	DC	Nov 2021
C	For Planning	AB			Jan 2022
D	For Planning	AB	RC	DC	Aug 2022

Approval for issue

Dave Cox	25 August 2022

File/Model Location

Document location:	P:\3800 Series\JSL3850 - Camp Field\Report
Model / Appendices location:	

© Copyright RPS Group Plc. All rights reserved.

The report has been prepared for the exclusive use of our client and unless otherwise agreed in writing by RPS Group Plc, any of its subsidiaries, or a related entity (collectively 'RPS'), no other party may use, make use of, or rely on the contents of this report. The report has been compiled using the resources agreed with the client and in accordance with the scope of work agreed with the client. No liability is accepted by RPS for any use of this report, other than the purpose for which it was prepared. The report does not account for any changes relating to the subject matter of the report, or any legislative or regulatory changes that have occurred since the report was produced and that may affect the report. RPS does not accept any responsibility or liability for loss whatsoever to any third party caused by, related to or arising out of any use or reliance on the report.

RPS accepts no responsibility for any documents or information supplied to RPS by others and no legal liability arising from the use by others of opinions or data contained in this report. It is expressly stated that no independent verification of any documents or information supplied by others has been made. RPS has used reasonable skill, care and diligence in compiling this report and no warranty is provided as to the report's accuracy. No part of this report may be copied or reproduced, by any means, without the prior written consent of RPS.

Prepared by:

RPS

Alice Brown
Junior Arboricultural Consultant

Lakesbury House, Hiltingbury Road
Hampshire SO53 5SS

T +44 2380 810 440
E rpsso@rpsgroup.com

Prepared for:

Redrow Homes

Pete Hodgson
Planner

Unit 1, Faraday Office Park
Rankine Road, Basingstoke, RG24 8QB

T 01256 307950
E pete.hodgson@redrow.co.uk

Contents

1 INTRODUCTION 1
2 SITE LOCATION 2
3 SURVEY METHOLDOLOGY 3
4 APPRAISAL AND RECOMMENDATIONS 6
5 ARBORICULTURAL IMPACT ASSESSMENT 8
6 TREE WORKS 12
7 TREE PROTECTION MEASURES 13
8 CONCLUSION 15

Appendices

Appendix A Tree Survey Schedule JSL3850_750
Appendix B Tree Constraints Plan JSL3850_700-701
Appendix C Tree Protection and Removal Plan JSL3850_710-711
Appendix D Arboricultural site register
Appendix E TPO Information
Appendix F Conservation Area Map
Appendix G Example Tree Protection Barriers (BS5837:2012 Fig 2 & 3)
Appendix H Construction Exclusion Zone (CEZ) Signage
Appendix I Site Photographs
Appendix J Arboricultural Glossary

1 INTRODUCTION

1.1 This Tree Survey and Arboricultural Impact Assessment (AIA) has been prepared by RPS on behalf of Redrow Homes to support development on land at Camp Field, Bartons Road, Havant PO9 5NA.

1.2 A tree survey of the application area was carried out by RPS on the 27th November 2020 in accordance with the requirements of BS5837:2012. Refer to Tree Constraints Plan JSL3850_700-701 (Appendix B). The weather was calm with some cloud.

1.3 This report has been prepared in broad accordance with the requirements set out in BS5837:2010 'Trees in relation to design, demolition and construction – Recommendations.'[1]

1.4 The purpose of this report is to:

- Provide an assessment of the quality of the surveyed trees with reference to the categories and sub-categories listed within Table 1 - BS5837:2012.
- Assess and quantify the arboricultural impact of the proposed development within the survey area, based on the proposed development layout.
- Provide additional arboricultural information and advice in relation to the protection of trees throughout the development of the site.
- Provide a Tree Protection and Removal Plan to detail the proposed protective measures to be taken in respect of the trees during development of the site.

1.5 The Tree Protection and Removal Plan JSL3850_710-711 included at Appendix C identifies the following:

- Trees to be retained;
- Alignment and design of protective fence;
- Root Protection Area (RPA) of trees;

1.6 The Tree Protection and Removal Plan shall be made available to all relevant site operatives prior to and throughout the construction process, so they understand the scope and importance of the tree protection measures.

1.7 To minimise the potential for harm to occur to retained trees all works shall be carried out with regard to the Tree Protection Measures and construction techniques detailed within this report.

1.8 In particular the establishment of a Construction Exclusion Zone (CEZ) by erection of Tree Protection Fencing will minimise the potential for harm to occur to retained trees.

[1] British Standards Institute. British Standard (BS5837) Trees in Relation to Design, Demolition and Construction - Recommendations. 2012.

2 SITE LOCATION

2.1 The survey covered trees bordering and within Camp Field, Bartons Road, Havant PO9 5NA. The survey site is centred on OS grid reference SU73300810.

2.2 The applicable area is located adjacent 'The Oaks Havant Crematorium' approximately 1.6 miles north of Warblington Station and 1.6 miles east of Staunton Farm. Woodland, open fields, residential housing and retail stores surround the site.

2.3 The soilscape of the area typically consists of 'Slowly permeable, seasonally wet, slightly acid but base-rich and loamy and clayey soils.[2]

[2] *Magic.gov.uk* – 11.11.2020

3 SURVEY METHOLDOLOGY

3.1 This tree survey was completed by Alice Brown of RPS and authorised by Brian Wallis, Technical Director of RPS.

3.2 The report and survey were carried out in general accordance with the requirements set out in BS 5837:2012 “Trees in relation to design, demolition and construction – Recommendations”.

3.3 The tree survey involved a visual inspection from the ground of individual specimens and groups of trees in order to record their amenity value, management recommendations and dimensions. Where observed, the general condition of all the trees has been noted. The survey does not constitute a full arboricultural condition assessment involving the detailed inspection of trees in relation to their structural condition, decay, and any other physical and pathogenic defects.

3.4 The locations of the trees were based upon topographic survey (CUB-IS-RSC-001) produced by Cube Surveys Ltd in November 2020.

3.5 The survey assesses individual trees and groups of trees for quality and benefits within the context of proposed development. The quality of each tree or group of trees has been recorded by allocating it to one of four categories as described in table 3.1. These categories have been differentiated on the Tree Constraints plan (JSL3850_700-701-Appendix B) by colours.

3.6 The survey information was recorded on the attached schedule (Appendix A) in general accordance with the guidance contained within Section 4 of BS 5837:2012 “Trees in relation to design, demolition and construction - Recommendations".

3.7 The information recorded includes the following-

Table 3.1 Tree characteristics recorded during survey

Tree Ref No:	Sequential reference number of trees or groups of trees. Avenues, woodlands and hedgerows were also recorded on the tree constraints plan. # - denotes inaccessible trees (best estimates are made about the location, physical dimensions and characteristics.)
Species	Species listed by common name, with scientific names (italic lettering).
Height (m)	Estimated height of canopy to nearest metre.
Branch Spread	branch spread, taken as a minimum at the four cardinal points, to derive an accurate representation of the crown
Stem diameter @ 1.5 m (m)	Estimated diameter of trunk at 1.5 m above ground level in metres unless otherwise indicated, multi-stemmed trees being measured in accordance with Annex C: BS5837
Existing height above ground level	To inform on ground clearance, crown/stem ratio and shading the estimated height of the first significant branch and direction of growth and canopy above ground level.
Stem No.	Number of stems (if necessary) of individual tree.
Life Stage	Expressed as:- Y (Young), SM (Semi-mature), EM (Early-mature), M (Mature), OM (Over-mature), V (Veteran), D (Dead)
Physical Condition	Apparent condition expressed as the following categories, based upon a brief visual inspection from the ground only:- Good, Fair, Poor, Dead
Comments / Management Recommendations	General observations, particularly of structural and/or physiological condition (e.g. the presence of any decay and physical defect), and/or preliminary management recommendations and potential for wildlife habitats (not exhaustive).
Estimated remaining contribution (years)	Estimated remaining contribution, in years (<10, 10+,20+,40+)
Tree Quality Assessment Value: <u>Category</u>	Criteria grading with regards to Table 1: BS 5837:2012, expressed as:- **A** (Trees/Vegetation of high quality and value) **B** (Vegetation of moderate quality and value) **C** (Trees/Vegetation of low quality and value) **U*** (Those in such a condition that they cannot realistically be retained as living trees in the context of the current land use for longer than 10 years)
	* Category U trees can have existing or potential conservation value which might be desirable to preserve.
Tree Quality Assessment Value: <u>Sub - Category</u>	Criteria grading with regards to Table 1: BS 5837:2012, expressed as:- **1** (Trees with mainly *arboricultural* value) **2** (Trees with mainly *landscape* value) **3** (Trees with mainly *cultural / conservation* value)

3.8 It is recommended that further arboricultural assessments be undertaken in order to assess the full health and safety of all trees which may possess structural or pathogenic conditions.

Limitations

3.9 The findings of this survey are not valid following adverse or unpredictable weather conditions or for any failure due to 'force majeure' or unpredictable events.

3.10 Trees were not climbed or inspected below ground level and inaccessible trees will have best estimates made about the location, physical dimensions and characteristics. Where direct access to trees was difficult a '#' denotes this within the Tree Survey Schedule (JSL3850_750-Appenix A).

3.11 Trees and woody vegetation were not assessed for their potential impact upon future construction issues such as foundation designs (re: NHBC chapter 4.2)'[3]. Whilst this report may assist in assessing likely future impacts, it should not be classed as a comprehensive vegetation survey in relation to impact upon future designs.

[3] NHBC. 'Chapter 4.2- Building Near Trees'. NHBC Standards 2016. 2016.

4 APPRAISAL AND RECOMMENDATIONS

Generally

4.1 In general, trees on the site appear to be in fair to good condition, being largely consistent with expectation for the age, management and species. **49nr**. individual trees, **1nr.** woodland, **8nr**. tree groups and **1nr**. hedge was recorded.

4.2 There was some species diversity with Oak, Ash and Sycamore being abundant.

4.3 The majority of trees were located across the borders of the site, with a category A woodland being located offsite adjacent the western boundary.

4.4 There were three high quality prominent Oak trees located within the centre of the field, which added much landscape value to the area.

4.5 A number of young Sweet Chestnut plantings were located to the east of the site, adding amenity value.

Planning considerations

4.6 Trees can offer many benefits, including the provision of visual amenity, softening or complementing the effect of the built environment, and adding maturity to new developments by making places more comfortable in tangible ways e.g. contributing screening and shade, reducing wind speed and turbulence, intercepting snow and rainfall, and reducing glare.

4.7 New tree planting opportunities should be considered as part of any potential development; this will help to broaden the age diversity of the tree cover within the area. Sufficient space should be provided for species with significant stature to grow out into maturity.

4.8 Under the UK planning system, local authorities have a statutory duty to consider the protection and planting of trees when granting planning permission for proposed development. The potential effect of development on trees, whether statutorily protected (e.g. by a tree preservation order or by their inclusion within a conservation area) or not, is a material consideration that is taken into account in dealing with planning applications.

4.9 Trees covered by a Tree Preservation Order are protected under the Town and Country Planning Act 1990 (Trees Regulation 2012) and the local authority must be consulted and permission sought for any works that may affect them.

4.10 Tree Preservation Orders (TPOs)-An email response from Havant Borough Council confirmed that there is a TPO onsite: No.0878:1976, Havant BC (Refer to Appendix E).

4.11 Conservation Areas- A desktop investigation using the Havant Borough Council map confirmed that the survey site does not form part of a conservation area (Refer to Appendix F).

4.12 Ancient Woodland- A desktop investigation using the magic maps application[2] confirmed that there is ancient woodland bordering the north-east boundary of the site.

Design and Site Layout Considerations

4.13 A tree constraints plan defines the Root Protection Area (RPA) for each tree shown as a circle. This area may be adjusted should physical constraints or topographical features limit root activity in a particular area, however the total area should remain the same. Prior to any adjustment of the trees RPA zones the changes should be assessed by an arboriculturalist. During any site planning exercises the current and future growth potential of the trees should be considered.

4.14 The RPA for single stem trees broadly equates to a radius 12 times the stem diameter of the tree at 1.5m above ground level or the extent of canopy spread, whichever is the greater. For multi-stemmed, low branching trees or those with trunks with an irregular girth the point of stem diameter measurement is adjusted in consideration of these factors and in accordance with the illustrations in BS5837:2012 (Annex C).

4.15 The RPA should become an exclusion zone during construction works and for any development. It should be fenced-off and protected in accordance with BS5837:2012. The canopy is likewise susceptible to damage during construction work and requires similar protection.

4.16 No activities that result in excavations, changes in level or soil compaction should take place within the RPA of any retained trees, especially older mature trees. This would include the storage of materials, any construction work, trafficking by vehicles or even excessive trafficking by pedestrians.

4.17 If some form of construction has to take place within the RPA then certain measures need to be adopted to avoid disturbance or damage to the roots and to maintain moisture infiltration and gaseous diffusion into the soil.

4.18 Services likewise should be routed outside the existing or potential root zone of trees. Where it is unavoidable, then certain measures should be employed to avoid damage to the trees larger roots.

4.19 The location and siting of new services near trees should consider the potential impact on and conflict with both tree roots and canopy. This should take into account the ultimate size of existing young and middle-aged trees at maturity. Conversely the impact of the tree on the activities should also be considered with regard to obstruction, shading, leaf fall and root action. These are problems that can be managed provided sufficient space is allowed for.

Trees and Management of Health and Safety

4.20 It is recommended that a programme of periodic arboricultural assessments be undertaken in order to regularly assess the full health and safety of all trees both in full leaf and bare stemmed. The assessments should prioritize areas based on levels of access and presence of target (i.e. exposure of people to hazard) and accord with arboricultural advice, taking account of relevant factors (where known) that affect safety such as the age class, condition, size and species of the trees.

5 ARBORICULTURAL IMPACT ASSESSMENT

Introduction

5.1 Trees have finite energy reserves, developed each year throughout the growing season, which are utilised for biological processes such as growth and defence against pests or diseases throughout the following year.

5.2 Any development in proximity to trees has the potential to cause harm to those trees unless control measures are identified and acted upon; as such it is essential to consider the relationship between the proposed development and the retained trees to identify what precautions are necessary, proportionate and appropriate.

5.3 Development has the potential to impact upon the above ground and below ground parts of trees. Whilst some damage that can occur, such as physical damage to the trees stems and branches from machinery movements, is clearly visible the impact from other aspects of work common on development sites which can have a significant effect upon the continued health of trees are not always immediately evident.

5.4 Damage that is not immediately evident, but which can cause long term harm to retained trees includes things such as damage to the soil structure by compaction causing root damage and levels changes altering the water table and affecting moisture availability.

5.5 To minimise the potential for harm to occur to retained trees all works must be carried out with regard to the Tree Protection measures detailed within this report.

5.6 In general, it can be seen that, by adopting appropriate methods of working, precautionary and protective measures, significant harm to retained trees can be avoided.

5.7 In particular the establishment of a Construction Exclusion Zone (CEZ) by erection of Tree Protection Fencing will minimise the potential for harm to occur to retained trees.

5.8 The retention and protection of significant trees and vegetation will assist in assimilating the proposed development into the wider landscape and offer long term tree cover.

5.9 Furthermore, development of the site may offer an excellent opportunity to actively manage any retained vegetation and accordingly we recommend restorative tree works be undertaken as appropriate. This will further improve the amenity value and landscape setting of the site and increase the useful life of any retained trees.

Brief Description of Proposed Development

5.10 This report relates to the following:

- New residential units,
- Associated parking and garages.

Identified Tree Removal and Specific Works

5.11 In order for this development to be realised, T5(x4), T13, T14, T15, T16, T17, T21 and partial removal of H1#, G3# and G4# require removal. Faceback of G1 & G5# will also be required in order to construct the tarmac cycle path.

5.12 It can be noted that all of the trees which require removal due to the location of the cycle path are Ash. They are therefore vulnerable to Ash Dieback (*Hymenoscyphus fraxineus*) which would limit the future of these trees, making them a potential danger to the general public.

5.13 It can be noted that ground works have previously occurred to the south of the site which may have severed tree roots making them unstable. Therefore T18 and T19 are to be retained, they must have regular inspection and if signs of Ash dieback, they will require removal.

Root Protection Areas

5.14 Following the erection of tree protective fencing, the majority of proposed development will take place outside of the RPA of trees to be retained.

5.15 Proposed works within the RPAs of T1, T18, T20 and T22 are to utilise a no-dig specification in accordance with "AA Guidance Note 12 Cellular Confinement Systems Near Trees"[4] utilising a load bearing, permeable cellular confinement system such as cellweb ® or similar.

5.16 The proposed attenuation basin, to the west of the site, will require the construction of a raised bund within the RPA of 2 trees (T26 & T27) and 1 Group (G6#). This requires the raising of soil levels within the RPA, which can compact roots, limit moisture infiltration and restrict gaseous exchange within the affected area.

5.17 The amount of incursion this required is as follows:

Tree Ref	RPA (m2)	Area of Incursion	% of RPA Effected
T26	652	75.95	11.65%
T27	707	84.65	11.97%
G6#	3429	44.41	1.30%

5.18 Every effort should be made to keep the effect of this work to a minimum. Any heavy plant used in this work should always be positioned outside of the RPAs of retained trees. If working from outside the RPA is not possible, ground protection must be used to where heavy plant enters the RPA.

5.19 The construction of garden fences will require hand dug post holes when located within the radial RPAs of retained trees.

5.20 It can be pointed out that the most notable tree impacts are around T1, T26 and T27.

[4] Ben Rose (2020) AA Guidance Note 12 Cellular Confinement Systems Near Trees, 1 edn., The Malthouse: Arboricultural Association

Services

5.21 Service plans are not currently available and therefore their impact has not yet been considered. When detailed plans become available the layouts and proposed works will be considered in terms of their possible impact to retained and proposed trees.

5.22 Any new services should avoid the RPAs of any retained tree. Where it is unavoidable, then the route of the services must be designed by an Engineer in consultation with the appointed project Arboricultural Consultant.

5.23 Where encroachment into RPAs is unavoidable, certain measures should be employed to avoid damage to the tree's structural roots such as;

- Hand excavation and protection of large roots throughout installation of service lines;
- The use of compressed air to displace soil yet retain roots;
- Solutions other than tradition trenches such as impact moiling, pipe ramming and micro tunnelling.

5.24 Any proposed tree pits that may conflict services shall be designed having consulted the electrical engineer and drainage engineer to ensure that suitable tree pits design is achievable in the desired location.

5.25 The proposed garden fences for this scheme will require hand dug post holes when located within the radial RPAs of retained.

Further advice can be found in NJUG Volume 4- "Guidance for the planning, installation and maintenance of utility services in proximity of trees"[5].

Outline methodology within Root Protection Areas

5.26 All new (and existing re-routed) services shall be routed outside the existing or potential RPA of retained trees. Where it is unavoidable, then hand excavation shall be employed to avoid damage to the larger roots and the services slid through or below the root system. Ducting shall be used to carry cables. Reference shall be made to the recommendations included within Guidelines for the Planning, Installation and Maintenance of Utility Apparatus in Proximity to Trees (NJUG 4)[6].

5.27 Details of Tree Protection Fencing and ground protection are detailed in the following section of this document.

5.28 The RPA should become an exclusion zone during construction works and for any development. It should be fenced-off and protected in accordance with BS5837:2012. The canopy is likewise susceptible to damage during construction work and requires similar protection.

[5] N.J.U.G. 4: Guidelines for the Planning, Installation and Maintenance of Utility Apparatus in Proximity to Trees. 2007

[6] *http://streetworks.org.uk/wp-content/uploads/V4-Trees-Issue-2-16-11-2007.pdf*

5.29 No activities that result in excavations, changes in level or soil compaction should take place within the RPA of any retained trees, especially older mature trees. This would include the storage of materials, any construction work, trafficking by vehicles or even excessive trafficking by pedestrians.

5.30 The location and siting of new facilities near trees should consider the potential impact on and conflict with both tree roots and canopy. This should take into account the ultimate size of existing young and middle-aged trees at maturity. Conversely the impact of the tree/s on end user activities should also be considered with regard to obstruction, shading, leaf fall and root action. These are problems that can be managed provided sufficient space is allowed for.

5.31 Where works within the RPA are unavoidable works must be undertaken by hand and the soil levels should be carefully reduced by hand to avoid damage to the bark of larger roots directly beneath and adjacent to the excavation. Where these become exposed, they should be further protected from drying out. Where root pruning is unavoidable it should be made at a suitable place within the root system, avoiding damage to surrounding tissue in accordance with BS 3998:2010[7]. Final pruning cuts shall be made at right angles to the axis of the root and the final cut wound should be smooth and as small as possible, free from ragged torn ends.

5.32 To minimise harm occurring as a result of the works existing hardstanding should be reused. Any necessary hard surface removal within the Root Protection Area (RPA) shall be carried out by low impact hand held pneumatic tools. Removal of the surface shall occur in strips working from the undisturbed surface, working in a retreating manner away from the retained trees. Subsequent removal of arisings / debris shall also be carried out by hand.

[7] British Standards Institute. British Standard (BS3998) Trees Work - Recommendations. 2010.

6 TREE WORKS

Standard of Work (If required)

6.1 All tree works shall be carried out in accordance with BS3998:2010 and latest arboricultural best practice.

6.2 All tree work shall be carried out by suitably qualified, competent and insured arboricultural contractors in accordance with Arboricultural Association Standard Conditions of Contract and Specifications for Tree Works (2008) Edition and BS 3998:2010 Tree Work.

6.3 All green and woody waste generated by the tree works shall be removed from site and disposed of in an environmentally sustainable manner.

6.4 When a branch is removed at its point of attachment, injury of the wood and bark of the parent stem or branch above the cut shall be avoided. If a branch collar is visible, the final cut shall be just outside it and care shall be taken to avoid tearing retained wood and bark when the cut is made. Preliminary cuts shall be made, if necessary, so as to remove weight, before a final cut is made. Care shall be taken to prevent falling branches from harming other parts of the tree (including its roots), its surroundings, people or property. Heavy branches shall be removed in sections and, where necessary, shall be lowered with ropes.

6.5 Prior to the commencement of any tree works an appropriate risk assessment shall be produced to describe the measures required to fulfil the statutory safety obligations. It shall aim to identify and prioritise the necessary control measures and precautions.

6.6 Following the works, it is recommended that the trees are monitored on a regular basis to ensure their ongoing vitality and health. These inspections shall be completed by a suitably qualified and experienced person.

Timing of Works

6.7 Any tree works required shall be completed prior to any construction and enabling works on the site.

7 TREE PROTECTION MEASURES

Construction Exclusion Zone

7.1 The protective fence line defines the Construction Exclusion Zone (CEZ) and the fencing shall not be moved or taken down at any time. Within the Construction Exclusion Zone there must be no mechanical digging or scraping; no alteration to existing ground levels including soil stripping; no earthworks; and no handling or discharge of any chemical substance, concrete washings or of any fuels.

7.2 Furthermore vehicular or pedestrian access and the storage of any materials is prohibited within the Construction Exclusion Zone.

7.3 Additionally no materials that may contaminate the soil such as concrete mixings, diesel oil and vehicle washings shall be discharged within 10m of the stem of any tree and no fires shall be lit within 10m of the maximum extent of a trees crown.

Tree Protection Fencing

7.4 The tree protection fence shall be erected as shown on the Tree Protection and Removal Plan (JSL3850_710-711) included with this report.

7.5 The fence line shown is the minimum required and the length of the fence shall be extended or adjusted on site as agreed with the Arboricultural Consultant to ensure satisfactory protection of all retained trees and RPAs.

7.6 Where proposed (permanent) construction site-hoarding provides the same level of protection to the retained trees and RPAs as the proposed tree protection fence, subject to agreement with the Arboricultural Consultant, the hoarding may serve as the tree protection fence. Notwithstanding, depending on the form and alignment of the construction site-hoarding it may be necessary to provide additional tree protection fence to ensure adequate protection of retained trees and RPAs as shown on the Tree Protection and Removal Plan.

7.7 Unless otherwise agreed in writing with the Arboricultural Consultant and/or LPA Tree Officer, the fencing system to be utilised shall be in accordance with Appendix C and compliant with BS5837:2012.

7.8 Once the protective barrier is in place it must remain in situ throughout the course of the development until the completion of development, other than to facilitate agreed tree removal; see below.

7.9 Where necessary, tree protection fencing may be temporarily re-aligned in order to facilitate tree removal. Fencing is to be re-instated immediately following removal in a manner that encompasses the remaining trees and their respective RPAs. During tree removal, no wheeled or tracked machinery is to enter the area previously encompassed by tree protective fencing as shown in the Tree Protection and Removal Plan.

7.10 Copies of the Tree Protection and Removal Plan shall be placed in the site office for reference by all site staff.

7.11 Signs detailing the purpose of the protective barrier shall be attached to the barriers at 10m intervals. Such signs should be weatherproof and shall be substantially in the form of the

specimen provided at Appendix H. Signs must be replaced as necessary should they be removed or become illegible.

7.12 Following erection of the protective barriers and prior to commencement of the development it is recommended that an inspection of the site, by either the Council's Tree Officer or the Arboricultural Consultant, is arranged to confirm fencing has been installed in accordance with the Tree Protection and Removal Plan and that any relevant arboreal conditions attached to the planning consent have been met.

7.13 It can be noted that to protect T1, two stages of fencing will be required. The first stage fencing will be realigned once the majority of the development has taken place to construct the cycleway and access routes.

Site Compounds and Materials Stores

7.14 Activities related to the establishment of a temporary site compound have the potential to impact upon retained trees by various means. In particular the storage and mixing of chemicals and materials such as concrete can have a damaging effect on tree health if precautions are not taken.

7.15 To prevent harm occurring to trees, provision for materials storage, deliveries and other related activities shall be made available in areas away from retained trees.

7.16 Under no circumstances shall materials or plant be stored beneath the canopy or within or abutting the Root Protection Zone of any retained trees/hedges, whether fenced or not.

Reporting

7.17 Should any arboricultural issues become apparent during the works the site manager should immediately contact the Arboricultural Consultant or the Council's Tree Officer for advice upon how to proceed.

8 CONCLUSION

8.1 A comprehensive tree survey has been completed on the site and its immediate surroundings. The survey was completed in accordance with BS5837:2012.

8.2 In order for this development to be realised, T5(x4), T13, T14, T15, T16, T17, T21 and partial removal of H1#, G3# and G4# require removal. Faceback of G1 & G5# will also be required in order to construct the tarmac cycle path.

8.3 All of the trees which require removal due to the location of the cycle path are Ash. They are therefore vulnerable to Ash Dieback (Hymenoscyphus fraxineus) which would limit the future of these trees, making them a potential danger to the general public.

8.4 Ground works have previously occurred to the south of the site which may have severed tree roots making them unstable. Therefore, if T18 and T19 are to be retained, they must have regular inspection and if signs of Ash dieback, they will require removal.

8.5 'No-dig' methods are required where the proposed development overlaps with the RPAs of Proposed works within the RPAs of T1, T18, T20 and T22.

8.6 The proposed attenuation basin, to the west of the site, will require the construction of a raised bund within the RPA of 2 trees (T26 & T27) and 1 Group (G6#). Any heavy plant used in this work should always be positioned outside of the RPAs of retained trees. If working from outside the RPA is not possible, ground protection must be used to where heavy plant enters the RPA.

8.7 The construction of garden fences will require hand dug post holes when located within the radial RPAs of retained trees.

8.8 The proposed scheme seeks to retain the majority of trees and in places will require limited impact. Where impact is proposed, its effects are not seen to have a significantly adverse effect on tree health or suitability for tree retention through to completion of the proposed development.

APPENDICES

Appendix A

Tree Survey Schedule JSL3850_750

Tree Survey Schedule

Site Camp Field, Havant
Project schedule ref: JSL3850_750
Drawing reference: JSL3850_700 & 701
Survey date: 26/11/2020

Surveyor: A Brown
Status: For Information
Revision: .
Notes:

Ref. no.	Species	Height (m)	Crown spread (m) N	E	S	W	Stem dia. (m)	Stem no. at 1.5m	Height of crown clearance (m)	Dir/ height	Age class	Structural condition	Physiological condition	General observations Management recommendations	Estimated remaining contribution (years)	Tree Quality Category (BS5837)
T1	Quercus robur Pedunculate Oak	11.0	6.0	7.0	8.0	5.0	1.10	1.00	4.00	S	M	G	G	Tree located in middle of field which bifurcates at 3m. Prominant in landscape. Stem occlusions.	40+	A2
T2	Quercus robur Pedunculate Oak	12.0	7.0	11.0	10.0	10.0	1.30	1.00	3.00	S	M	G	G	Tree located in middle of field with eastern bias. Prominant in landscape. Fungus at base.	40+	A2
T3	Quercus robur Pedunculate Oak	12.0	7.0	12.0	12.0	9.0	1.40	1.00	6.00	S	M	G	G	Tree located in middle of field with eastern bias. Prominant in landscape. Impressive wide crown. Deadwood.	40+	A2
T4	Quercus robur Pedunculate Oak	12.0	5.0	7.0	10.0	6.0	1.30	1.00	5.00	S	M	P	P	Moribund / standing dead tree. Habitat value.	<10	U
T5	32 Castanea sativa Sweet Chestnut	6.0	2.0	2.0	2.0	2.0	0.15	1.00	3.00	-	Y	G	G	32No. attractive young plantings bordering the site. Stem occlusions.	<10	C2
T6	2 Acer pseudoplatanus Sycamore	7.0	2.0	2.0	2.0	2.0	0.15	1.00	2.00	-	Y	G	G	2No. young attractive plantings. Previous pruning.	<10	C2
T7	Fraxinus excelsior Common Ash	10.0	8.0	7.0	7.0	7.0	0.3 0.3 0.4	3.00	1.50	N	EM	G	G	Triple-stemmed Ash near fence. Ivy present.	40+	B2
T8	Quercus robur Pedunculate Oak	7.0	1.0	2.0	1.0	1.0	0.15	1.00	1.00	EM	Y	G	G	Young oak planting.	10+	C2
T9	Fraxinus excelsior Common Ash	8.0	3.0	3.0	4.0	3.0	0.20	1.00	1.50	N	SM	G	G	Attractive tree near fence. Southerly bias. Ivy present.	10+	C2
T10*	Fraxinus excelsior Common Ash	12.0	9.0	9.0	8.0	8.0	0.4 0.4 0.4 0.4	4.00	1.00	W	M	G	G	Prominent offsite tree in oppostie field. Four stems.	10+	A2
T11*	Pinus nigra Austrian Pine	14.0	6.0	6.0	6.0	6.0	1.10	1.00	1.00	W	M	G	G	Tall, attractive offsite Pine which bifurcates at 8m. Stands out in the landscape.	40+	A2
T12*	Quercus robur Pedunculate Oak	13.0	10.0	9.0	9.0	9.0	1.30	1.00	5.00	S	M	G	G	Very impressive offsite Oak. Wide crown which overhangs adjacent road.	40+	A2

Note: This survey is based on a brief visual inspection from the ground.
It is not intended as a full arboricultural inspection.
- Indicates estimated tree. * - Indicates off site tree.

Tree Survey Schedule

Site Camp Field, Havant
Project schedule ref: JSL3850_750
Drawing reference: JSL3850_700 & 701
Survey date: 26/11/2020

Surveyor: A Brown
Status: For Information
Revision: .
Notes:

Ref. no.	Species	Height (m)	Crown spread (m) N	E	S	W	Stem dia. (m)	Stem no. at 1.5m	Height of crown clearance (m)	Dir/ height	Age class	Structural condition	Physiological condition	General observations Management recommendations	Estimated remaining contribution (years)	Tree Quality Category (BS5837)
T13	Fraxinus excelsior Common Ash	8.0	4.0	4.0	5.0	5.0	0.30	1.00	2.00	EM	SM	G	G	Attractive Ash.	10+	C2
T14	Fraxinus excelsior Common Ash	7.0	3.0	3.0	3.0	4.0	0.25	1.00	1.50	W	SM	G	G	Ash in hedge.	10+	C2
T15	Fraxinus excelsior Common Ash	9.0	6.0	5.0	7.0	7.0	0.25 0.55	2.00	4.00	N	EM	G	G	Prominent Ash on southern boundary. Bifurcates at 0.5m.	40+	B2
T16	Fraxinus excelsior Common Ash	10.0	6.0	2.0	6.0	6.0	0.3 0.3	2.00	4.00	N	EM	G	G	Twin-stemmed Ash on southern boundary, adjacent T17.	40+	B2
T17#	Fraxinus excelsior Common Ash	10.0	6.0	6.0	6.0	2.0	0.25 0.3 0.3	3.00	4.00	N	EM	G	G	Ash on southern boundary, adjacent T16. Trifurcates at 0.5m.	40+	B2
T18	Fraxinus excelsior Common Ash	8.0	4.0	4.0	4.0	4.0	0.25 0.25 0.25	3.00	2.00	E	SM	G	G	Ash which trifurcates at 1.5m. Adjacent T19.	20+	C2
T19	Fraxinus excelsior Common Ash	8.0	4.0	5.0	5.0	2.0	0.11 0.12	2.00	3.00	S	SM	F	F	Ash with southerly bias. Adjacent T18.	10+	C2
T20	Acer pseudoplatanus Sycamore	11.0	6.0	6.0	6.0	6.0	0.35 0.5	2.00	0.50	W	EM	G	G	Twin-stemmed Sycamore on boundary.	40+	B2
T21	Acer pseudoplatanus Sycamore	11.0	6.0	6.0	7.0	6.0	0.25 0.43 0.45	3.00	3.00	W	M	G	G	Triple-stemmed Sycamore with wide crown. Ivy present.	40+	A2
T22	Acer pseudoplatanus Sycamore	13.0	9.0	10.0	7.0	9.0	1.30	1.00	4.00	E	M	G	G	Very impressive Sycamore which stands out in the landscape. Some deadwood.	40+	A2
T23	Tilia Sp. Lime	11.0	6.0	6.0	6.0	6.0	0.80	1.00	5.00	W	EM	G	G	Attractive tree which bifurcates at 7m.	40+	B2
T24	Quercus robur Pedunculate Oak	10.0	4.0	7.0	7.0	4.0	0.60	1.00	6.00	S	SM	G	G	Oak leaning south-west in row. Some deadwood.	20+	B2

Note: This survey is based on a brief visual inspection from the ground.
It is not intended as a full arboricultural inspection.
- Indicates estimated tree. * - Indicates off site tree.

Tree Survey Schedule

Site Camp Field, Havant
Project schedule ref: JSL3850_750
Drawing reference: JSL3850_700 & 701
Survey date: 26/11/2020

Surveyor: A Brown
Status: For Information
Revision: .
Notes:

Ref. no.	Species	Height (m)	Crown spread (m) N	E	S	W	Stem dia. (m)	Stem no. at 1.5m	Height of crown clearance (m)	Dir/ height	Age class	Structural condition	Physiological condition	General observations Management recommendations	Estimated remaining contribution (years)	Tree Quality Category (BS5837)
T25	Quercus robur Pedunculate Oak	12.0	7.0	10.0	7.0	9.0	1.10	1.00	5.00	N	M	G	G	Prominent Oak. Some deadwood.	40+	A2
T26	Quercus robur Pedunculate Oak	12.0	6.0	10.0	5.0	12.0	1.20	1.00	6.00	N	M	G	G	Attractive tree in row. Some deadwood.	40+	A2
T27	Quercus robur Pedunculate Oak	12.0	7.0	10.0	5.0	6.0	1.30	1.00	4.00	W	M	G	G	Impressive oak which stands out in row.	40+	A2
T28	Quercus robur Pedunculate Oak	11.0	5.0	9.0	6.0	6.0	1.00	1.00	5.00	S	M	G	G	Attractive tree. Some deadwood.	40+	A2
T29	Quercus robur Pedunculate Oak	11.0	7.0	9.0	6.0	5.0	0.90	1.00	5.00	N	W	G	G	Attractive tree. Some deadwood.	40+	A2
T30	Quercus robur Pedunculate Oak	13.0	4.0	8.0	8.0	8.0	0.8 1.1	1.00	6.00	E	OM	G	G	Oak which bifurcates at 1m. Stem occlusions. Some deadwood.	40+	A2
T31	Quercus robur Pedunculate Oak	11.0	5.0	7.0	5.0	6.0	1.00	1.00	5.00	E	M	F	F	Prominent Oak. Stem occlusions. Large branch has fallen off.	40+	B2
T32	Quercus robur Pedunculate Oak	12.0	6.0	8.0	6.0	6.0	1.30	1.00	7.00	E	M	G	G	Oak which bifurcates at 2m.	40+	A2
T33	Quercus robur Pedunculate Oak	10.0	5.0	10.0	5.0	5.0	0.90	1.00	4.00	E	M	F	F	Oak leaning east.	40+	B2
T34	Quercus robur Pedunculate Oak	0.0	0.0	0.0	0.0	0.0	1.00	1.00	0.00	-	M	P	P	Fallen tree	<10	U
T35	Quercus robur Pedunculate Oak	11.0	7.0	9.0	6.0	6.0	1.10	1.00	3.00	N	M	G	G	Oak which bifurcates at 3.5m.	40+	A2
T36	Quercus robur Pedunculate Oak	10.0	1.0	6.0	6.0	1.0	0.2 0.8	2.00	5.00	S	M	F	G	Twin-stemmed Oak leaning southwards.	40+	B2

Note: This survey is based on a brief visual inspection from the ground.
It is not intended as a full arboricultural inspection.
- Indicates estimated tree. * - Indicates off site tree.

Tree Survey Schedule

Site Camp Field, Havant
Project schedule ref: JSL3850_750
Drawing reference: JSL3850_700 & 701
Survey date: 26/11/2020

Surveyor: A Brown
Status: For Information
Revision: .
Notes:

Ref. no.	Species	Height (m)	Crown spread (m) N	E	S	W	Stem dia. (m)	Stem no. at 1.5m	Height of crown clearance (m)	Dir/ height	Age class	Structural condition	Physiological condition	General observations Management recommendations	Estimated remaining contribution (years)	Tree Quality Category (BS5837)
T37	Quercus robur Pedunculate Oak	12.0	9.0	9.0	9.0	6.0	1.10	1.00	6.00	W	M	G	G	Impressive tree in row. Some deadwood. Ivy present.	40+	A2
T38	Quercus robur Pedunculate Oak	10.0	1.0	11.0	9.0	5.0	0.70	1.00	4.00	E	EM	F	G	Oak leaning to the east.	40+	B2
T39	Quercus robur Pedunculate Oak	11.0	5.0	7.0	5.0	5.0	1.00	1.00	5.00	E	M	G	G	Oak leaning eastwards. Some deadwood. Ivy present.	40+	A2
T40	Quercus robur Pedunculate Oak	12.0	4.0	4.0	4.0	4.0	0.70	1.00	8.00	S	EM	F	G	Oak in corner leaning southwards. Lots of ivy.	40+	B2
T41	Quercus robur Pedunculate Oak	11.0	3.0	3.0	6.0	3.0	0.70	1.00	6.00	S	EM	G	F	Oak on edge of woodland, leaning southwards. Ivy present.	40+	B2
T42	Quercus robur Pedunculate Oak	12.0	7.0	8.0	11.0	8.0	1.10	1.00	5.00	S	M	G	G	Prominent, impressive Oak with southerly bias. Some deadwood.	40+	A2
T43	Quercus robur Pedunculate Oak	12.0	6.0	11.0	10.0	7.0	1.10	1.00	6.00	N	M	F	G	Impressive tree which stands out. Deadwood. Ivy present.	40+	A2
T44	Quercus robur Pedunculate Oak	12.0	5.0	5.0	8.0	7.0	0.65	1.00	6.00	S	EM	G	G	Attractive Oak in row.	40+	B2
T45	Quercus robur Pedunculate Oak	11.0	6.0	7.0	8.0	10.0	0.90	1.00	4.00	S	M	G	G	Prominent Oak with Stem occlusions. Deadwood. Ivy present.	40+	A2
T46	Quercus robur Pedunculate Oak	11.0	5.0	5.0	6.0	5.0	1.00	1.00	7.00	E	M	F	G	Oak with a branch which has fallen off. Deadwood.	40+	B2
T47	Quercus robur Pedunculate Oak	11.0	5.0	5.0	5.0	6.0	0.60	1.00	5.00	W	EM	G	G	Oak in row. Leans to the west.	40+	B2
T48#	Prunus avium Wild Cherry	0.0	0.0	0.0	0.0	0.0	0.25	1.00	0.00		SM	P	P	Fallen	<10	U

Note: This survey is based on a brief visual inspection from the ground.
It is not intended as a full arboricultural inspection.
- Indicates estimated tree. * - Indicates off site tree.

Tree Survey Schedule

Site Camp Field, Havant
Project schedule ref: JSL3850_750
Drawing reference: JSL3850_700 & 701
Survey date: 26/11/2020

Surveyor: A Brown
Status: For Information
Revision: .
Notes:

Ref. no.	Species	Height (m)	Crown spread (m) N	E	S	W	Stem dia. (m)	Stem no. at 1.5m	Height of crown clearance (m)	Dir/ height	Age class	Structural condition	Physiological condition	General observations Management recommendations	Estimated remaining contribution (years)	Tree Quality Category (BS5837)
T49#	Prunus avium Wild Cherry	0.0	0.0	0.0	0.0	0.0	0.25	1.00	0.00	-	SM	P	P	Branch fallen from midpoint.	<10	U
W1#*	Quercus robur, Acer pseudoplatanus,Fraxinus excelsior, Pedunculate Oak, Sycamore, Common Ash	14.0	See Plan				-	-	0.50	-	Varies	G	G	Offiste woodland.	40+	A2
G1#	Acer pseudoplatanus,Fraxinus excelsior, Sycamore, Common Ash	11.0	See Plan				-	-	1.50	-	Y-SM	G	G	Row of young/semi-mature Ash and Sycamore.Collective landscape value. Southern branches extend past edge of road.	20+	C2
G2#	Quercus robur, Acer pseudoplatanus,Fraxinus excelsior, Pedunculate Oak, Sycamore, Common Ash	9.0	See Plan				-	-	1.00	-	Y-SM	G	G	Row of young/semi-mature trees on boundary.	20+	C2
G3#	Acer pseudoplatanus, Prunus avium, Pedunculate Oak, Wild Cherry	10.0	See Plan				-	-	1.00	-	Y	G	G	Row of three young trees.	10+	C2
G4#	Acer pseudoplatanus,Fraxinus excelsior, Sycamore, Common Ash	10.0	See Plan				-	-	1.00	-	Y-SM	G	G	Row of young/semi-mature trees.	20+	C2
G5#	Acer pseudoplatanus, Prunus avium, Tilia Sp., Sycamore, Wild Cherry, Lime	12.0	See Plan				-	-	1.00	-	Y-SM	G	G	Group of young/semi-mature trees.	20+	C2
G6#	Acer pseudoplatanus, Prunus avium, Pedunculate Oak, Wild Cherry	13.0	See Plan				-	-	1.00	-	Varies	G	G	Attractive group containing a variety of species.	40+	A2
G7#	Acer pseudoplatanus, Prunus avium, Acer campestre, Tilia Sp, Pedunculate Oak, Wild Cherry, Field Maple, Lime	12.0	See Plan				-	-	1.00	-	Varies	G	G	Attractive group bordering woodland. Trees are generally semi-mature to early mature.	40+	B2
G8	Acer pseudoplatanus, Prunus avium, Pedunculate Oak, Wild Cherry	12.0	See Plan				-	-	0.50	-	Varies	G	G	Group primarily consisting of Oak and Cherry. Borders woodland.	40+	A2
H1#	Hedge plants, Rosa canina, Cotoneaster Sp., Dog rose, Teasel, Cotoneaster	3.0	See Plan				-	-	0.00	-	Y	G	G	Hedge across southern boundary.	<10	C2

Note: This survey is based on a brief visual inspection from the ground.
It is not intended as a full arboricultural inspection.
- Indicates estimated tree. * - Indicates off site tree.

Appendix B

Tree Constraints Plan JSL3850_700-701

© 2020 RPS Group

Notes

1. This drawing has been prepared in accordance with the scope of RPS's appointment with its client and is subject to the terms and conditions of that appointment. RPS accepts no liability for any use of this document other than by its client and only for the purposes for which it was prepared and provided.
2. If received electronically it is the recipients responsibility to print to correct scale. Only written dimensions should be used.
3. Where applicable Ordnance Survey (c) Crown Copyright 2020
   All rights reserved. Licence number 0100031673

Key

Survey boundary.

T1 — Tree with numbered reference. Canopy spread and BS5837:2012 tree quality category as shown below.

T1# — Tree (location estimated) with numbered reference. Canopy spread and BS5837:2012 tree quality category.

T1* — Tree off-site with numbered reference. Canopy spread and BS5837:2012 tree quality category.

G1 — Vegetation group with numbered reference. Canopy extents and BS5837:2012 tree quality category as shown below.

H1 — Hedge with numbered reference. Width and BS5837:2012 tree quality category as shown below.

BS 5837:2012 Tree Quality Categories - Table 1

- Category A - High quality
- Category B - Moderate quality
- Category C - Low quality
- Category U - Unsuitable for retention

T1 (G1) — Tree protected by Tree Preservation Order No.0878:1976, Havant BC. Bracketed number reference relates to the TPO Schedule.

Root protection area (RPA) Calculated in accordance with Section 4.6 - BS5837:2012

NOTES:

- Refer to RPS Tree Survey Report & Schedule for further details.
- Survey based on a visual inspection from the ground and is not intended as a full arboricultural inspection.
- Plan produced in accordance with recommendations set out in BS 5837:2012 - 'Trees in Relation to design, demolition and construction'.
- Due to the legal protection afforded to breeding birds vegetation removal should not take place during the bird nesting period; generally, although not restricted to, March - August inclusive.
- Survey based upon topographic survey produced by Cube Surveys Ltd in November 2020.

Scale Bar

0m 25m 50m

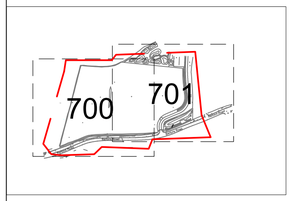

Rev	Description	By	CB	Date
A	Minor Amends	AB	DC	April 2021

MAKING COMPLEX EASY

Lakesbury House, Hiltingbury Road, Chandlers Ford, Hampshire SO53 5SS

T: 02380 810 440 E: rpsso@rpsgroup.com

Client: Redrow Homes

Project: Camp Field Havant

Title: Tree Constraints Plan Sheet 1 of 2

Status	Drawn By	PM/Checked by
For Information	NG	DC

Job Ref	Scale @ A1	Date Created
JSL3850	1:500	Dec 2020

RPS Drawing / Figure Number	Rev
700	A

rpsgroup.com

P:\3800 Series\JSL3850 - Camp Field\Tech\ACAD\Current\JSL3850_700A.dwg

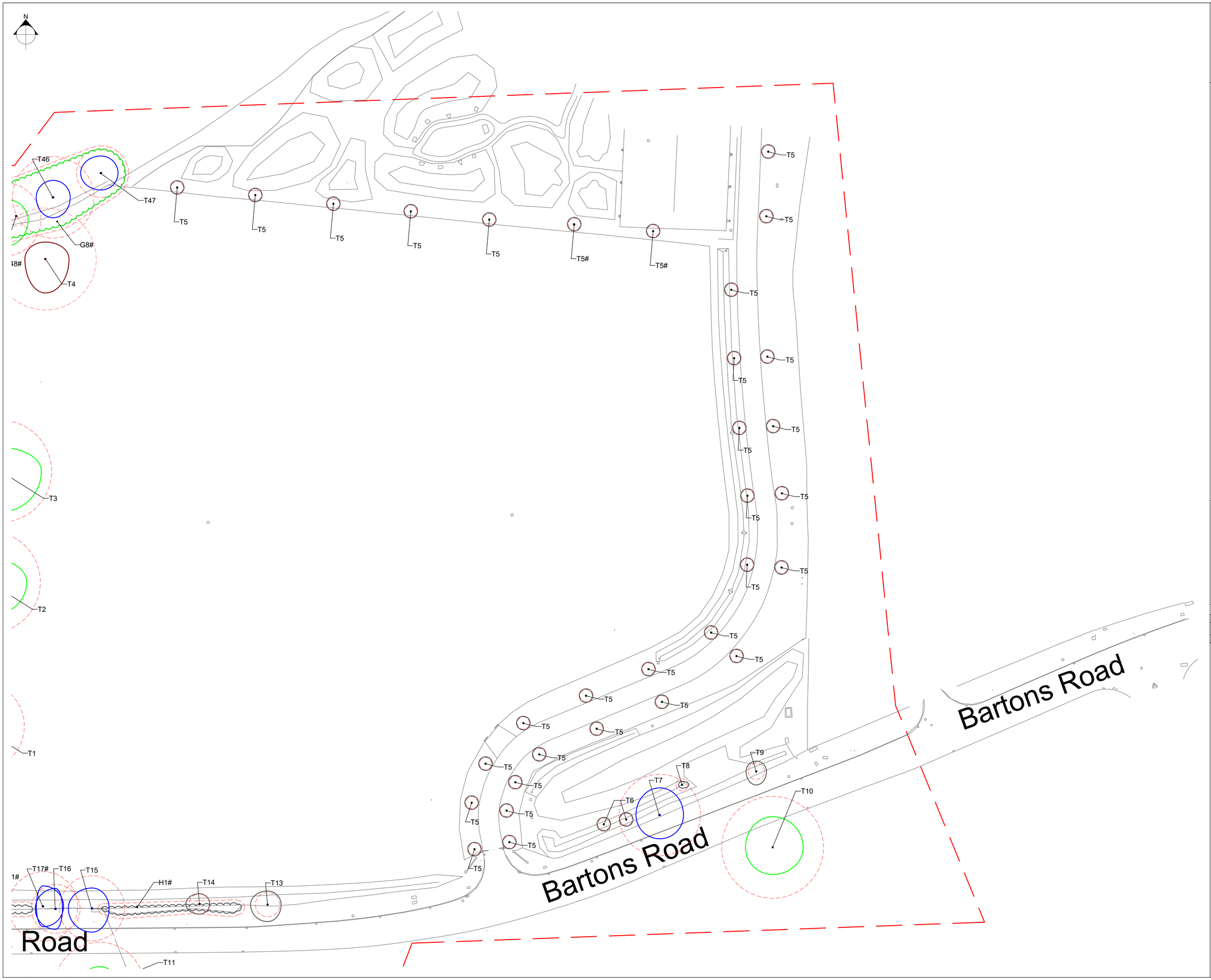

© 2020 RPS Group

Notes

1. This drawing has been prepared in accordance with the scope of RPS's appointment with its client and is subject to the terms and conditions of that appointment. RPS accepts no liability for any use of this document other than by its client and only for the purposes for which it was prepared and provided.
2. If received electronically it is the recipients responsibility to print to correct scale. Only written dimensions should be used.
3. Where applicable Ordnance Survey (c) Crown Copyright 2020
   All rights reserved. Licence number 0100031673

Key

Survey boundary.

T1 — Tree with numbered reference. Canopy spread and BS5837:2012 tree quality category as shown below.

T1# — Tree (location estimated) with numbered reference. Canopy spread and BS5837:2012 tree quality category.

T1* — Tree off-site with numbered reference. Canopy spread and BS5837:2012 tree quality category.

G1 — Vegetation group with numbered reference. Canopy extents and BS5837:2012 tree quality category as shown below.

H1 — Hedge with numbered reference. Width and BS5837:2012 tree quality category as shown below.

BS 5837:2012 Tree Quality Categories - Table 1

- Category A - High quality
- Category B - Moderate quality
- Category C - Low quality
- Category U - Unsuitable for retention

T1 (G1) — Tree protected by Tree Preservation Order No.0878:1976, Havant BC. Bracketed number reference relates to the TPO Schedule.

Root protection area (RPA) Calculated in accordance with Section 4.6 - BS5837:2012

NOTES:

- Refer to RPS Tree Survey Report & Schedule for further details.
- Survey based on a visual inspection from the ground and is not intended as a full arboricultural inspection.
- Plan produced in accordance with recommendations set out in BS 5837:2012 - 'Trees in Relation to design, demolition and construction'.
- Due to the legal protection afforded to breeding birds vegetation removal should not take place during the bird nesting period; generally, although not restricted to, March - August inclusive.
- Survey based upon topographic survey produced by Cube Surveys Ltd in November 2020.

Scale Bar

0m 25m 50m

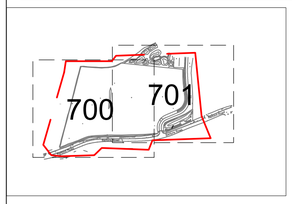

Rev	Description	By	CB	Date
A	Minor Amends	AB	DC	April 2021

MAKING COMPLEX EASY

Lakesbury House, Hiltingbury Road, Chandlers Ford, Hampshire SO53 5SS

T: 02380 810 440 E: rpsso@rpsgroup.com

Client: Redrow Homes

Project: Camp Field Havant

Title: Tree Constraints Plan Sheet 2 of 2

Status	Drawn By	PM/Checked by
For Information	NG	DC

Job Ref	Scale @ A1	Date Created
JSL3850	1:500	Dec 2020

RPS Drawing / Figure Number	Rev
701	A

rpsgroup.com

P:\3800 Series\JSL3850 - Camp Field\Tech\ACAD\Current\JSL3850_700A.dwg

Appendix C

Tree Protection and Removal Plan JSL3850_710-711

© 2020 RPS Group

Notes

1. This drawing has been prepared in accordance with the scope of RPS's appointment with its client and is subject to the terms and conditions of that appointment. RPS accepts no liability for any use of this document other than by its client and only for the purposes for which it was prepared and provided.
2. If received electronically it is the recipients responsibility to print to correct scale. Only written dimensions should be used.
3. Where applicable Ordnance Survey (c) Crown Copyright 2020
   All rights reserved. Licence number 0100031673

Key

- Site boundary.
- Tree with numbered reference. Canopy spread and BS5837:2012 tree quality category as shown below.
- T18 Tree (location estimated) with numbered reference. Canopy spread and BS5837:2012 tree quality category.
- T17 Tree off-site with numbered reference. Canopy spread and BS5837:2012 tree quality category.
- G1 Vegetation group with numbered reference. Canopy extents and BS5837:2012 tree quality category as shown below.
- H1 Hedge with numbered reference. Width and BS5837:2012 tree quality category as shown below.

BS 5837:2012 Tree Quality Categories - Table 1

- Category A - High quality
- Category B - Moderate quality
- Category C - Low quality
- Category U - Unsuitable for retention

- T1 Tree protected by Tree Preservation Order No.0878:1976, Havant BC. Bracketed number reference relates to the TPO Schedule.
- Root protection area (RPA) Calculated in accordance with Section 4.6 - BS5837:2012
- Above ground construction requiring "No-dig" design principles in accordance with "AA Guidance Note 12 Cellular Confinement Systems Near Trees".
- Excavation to be completed by hand, any required root pruning to be in accordance with BS 3998. Pruning of roots over 25mmØ to be monitored by arboriculturalist, with ongoing monitoring of trees condition by an arboriculturalist being recommended.
- "No-dig" Works to be completed by hand or by using plant located outside trees RPAs. If this is not possible, ground protection must be used to facilitate access.
- Tree to be removed with numbered reference. Canopy spread and BS5837:2012 tree quality category.
- Vegetation group or hedge to be removed with numbered reference. Canopy spread and BS5837:2012 tree quality category.
- Phase 1 - Temporary protective fencing in accordance with Section 6.2 - BS5837:2012. See inset details for example barriers.
- Phase 2 - Temporary protective fencing in accordance with Section 6.2 - BS5837:2012. See inset details for example barriers.

NOTES:

- Refer to RPS Tree Survey Report & Schedule for further details.
- Survey based on a visual inspection from the ground and is not intended as a full arboricultural inspection.
- Plan produced in accordance with recommendations set out in BS 5837:2012 - 'Trees in Relation to design, demolition and construction'.
- Due to the legal protection afforded to breeding birds vegetation removal should not take place during the bird nesting period; generally, although not restricted to, March - August inclusive.
- Survey based upon topographic survey produced by Cube Surveys Ltd in November 2020.
- Pedestrian/ vehicular emergency access routes to be maintained at all times.

Scale Bar

0m 25m 50m

Rev	Description	By	CB	Date
D	Uprevised layout	JMB	DC	25.08.22
C	Uprevised layout	AB	DC	15.02.22
B	TPF updated to protect T2 & T3	DC	DC	19.11.21
A	Uprevised to Layout C13	MW	DC	11.11.21

MAKING COMPLEX EASY

Lakesbury House, Hiltingbury Road, Chandlers Ford, Hampshire SO53 5SS

T: 02380 810 440 E: rpsso@rpsgroup.com

Client: Redrow Homes

Project: Camp Field Havant

Title: Tree Protection and Removal Plan Sheet 1 of 2

Status	Drawn By	PM/Checked by
For Planning	AB	DC
Job Ref	**Scale @ A1**	**Date Created**
JSL3850	1:500	Mar 2021
RPS Drawing / Figure Number		**Rev**
710		D

rpsgroup.com

P:\3800 Series\JSL3850 - Camp Field\Tech\ACAD\Current\JSL3850_710D.dwg

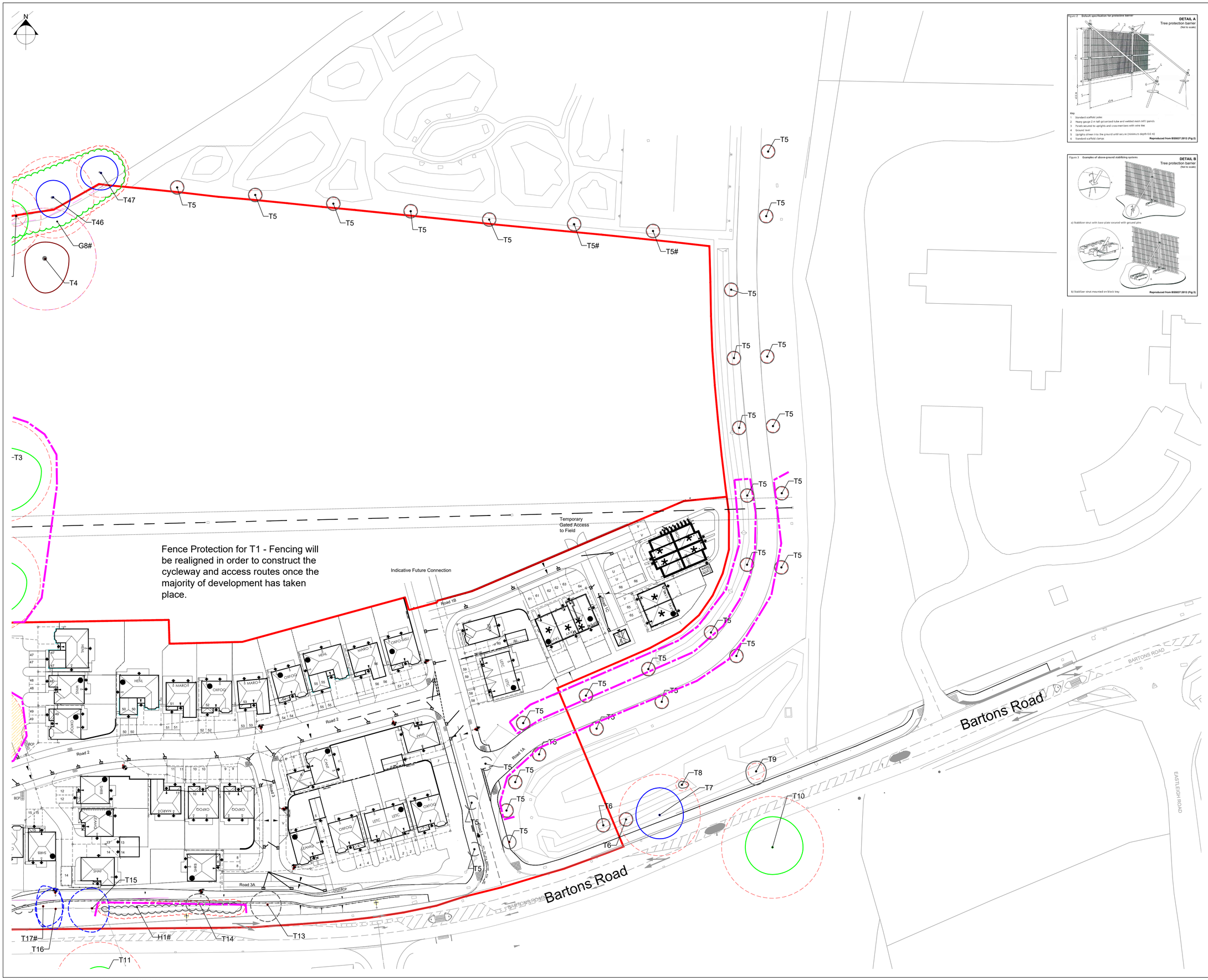

Figure 2 Default specification for protective barrier

DETAIL A
Tree protection barrier
(Not to scale)

Key
1 Standard scaffold poles
2 Heavy gauge 2 m tall galvanized tube and welded mesh infill panels
3 Panels secured to uprights and cross-members with wire ties
4 Ground level
5 Uprights driven into the ground until secure (minimum depth 0.6 m)
6 Standard scaffold clamps

Reproduced from BS5837:2012 (Fig.2)

Figure 3 Examples of above-ground stabilizing systems

DETAIL B
Tree protection barrier
(Not to scale)

Reproduced from BS5837:2012 (Fig.3)

© 2020 RPS Group

Notes

1. This drawing has been prepared in accordance with the scope of RPS's appointment with its client and is subject to the terms and conditions of that appointment. RPS accepts no liability for any use of this document other than by its client and only for the purposes for which it was prepared and provided.
2. If received electronically it is the recipients responsibility to print to correct scale. Only written dimensions should be used.
3. Where applicable Ordnance Survey (c) Crown Copyright 2020
   All rights reserved. Licence number 0100031673

Key

- Site boundary.
- T1 — Tree with numbered reference. Canopy spread and BS5837:2012 tree quality category as shown below.
- T18 — Tree (location estimated) with numbered reference. Canopy spread and BS5837:2012 tree quality category.
- T1* — Tree off-site with numbered reference. Canopy spread and BS5837:2012 tree quality category.
- G1 — Vegetation group with numbered reference. Canopy extents and BS5837:2012 tree quality category as shown below.
- H1 — Hedge with numbered reference. Width and BS5837:2012 tree quality category as shown below.

BS 5837:2012 Tree Quality Categories - Table 1

- Category A - High quality
- Category B - Moderate quality
- Category C - Low quality
- Category U - Unsuitable for retention

- T1 / G1 — Tree protected by Tree Preservation Order No.0878:1976, Havant BC. Bracketed number reference relates to the TPO Schedule.
- Root protection area (RPA) Calculated in accordance with Section 4.6 - BS5837:2012
- Above ground construction requiring "No-dig" design principles in accordance with "AA Guidance Note 12 Cellular Confinement Systems Near Trees".
- Excavation to be completed by hand, any required root pruning to be in accordance with BS 3998. Pruning of roots over 25mmØ to be monitored by arboriculturalist, with ongoing monitoring of trees condition by an arboriculturalist being recommended.
- Tree to be removed with numbered reference. Canopy spread and BS5837:2012 tree quality category.
- Vegetation group or hedge to be removed with numbered reference. Canopy spread and BS5837:2012 tree quality category.
- Phase 1 - Temporary protective fencing in accordance with Section 6.2 - BS5837:2012. See inset details for example barriers.
- Phase 2 - Temporary protective fencing in accordance with Section 6.2 - BS5837:2012. See inset details for example barriers.

NOTES:

- Refer to RPS Tree Survey Report & Schedule for further details.
- Survey based on a visual inspection from the ground and is not intended as a full arboricultural inspection.
- Plan produced in accordance with recommendations set out in BS 5837:2012 - 'Trees in Relation to design, demolition and construction'.
- Due to the legal protection afforded to breeding birds vegetation removal should not take place during the bird nesting period; generally, although not restricted to, March - August inclusive.
- Survey based upon topographic survey produced by Cube Surveys Ltd in November 2020.
- Pedestrian/ vehicular emergency access routes to be maintained at all times.
- All protective fencing to be completed and approved by LPA / CA prior to commencement of any site works.
- All works to conform with requirements of:
  BS 3998:2010 - Tree Works
  BS 5837:2012 - Trees in relation to design, demolition and construction

Scale Bar
0m 25m 50m

Rev	Description	By	CB	Date
C	Uprevised layout	JMB	DC	25.08.22
B	Uprevised layout	AB	DC	15.02.22
A	Uprevised to Layout C13	MW	DC	11.11.21

MAKING COMPLEX EASY

Lakesbury House, Hiltingbury Road, Chandlers Ford, Hampshire SO53 5SS

T: 02380 810 440 **E:** rpsso@rpsgroup.com

Client: Redrow Homes

Project: Camp Field Havant

Title: Tree Protection and Removal Plan Sheet 2 of 2

Status	Drawn By	PM/Checked by
ForPlanning	AB	DC

Job Ref	Scale @ A1	Date Created
JSL3850	1:500	Mar 2021

RPS Drawing / Figure Number	Rev
711	C

rpsgroup.com

P:\3800 Series\JSL3850 - Camp Field\Tech\ACAD\Current\JSL3850_710D.dwg

Appendix D

Arboricultural site register

(Example template only)

ARBORICULTURAL SITE REPORT

PROJECT:	**SITE CONTACT:**	**REPORT NO:**
XXX, XX Street, XXX Town	*Mr XXX*	*001*
INSPECTION COMPLETED BY:	**DATE AND TIME:**	**SHEET:**
Mr XXX	*XXX*	*X OF X*

1.1 IT EM	**LOCATION**	**NOTES / RECOMMENDATIONS**	**ACTION**
1	*E.g. Adjacent to T999, north of building*	*E.g. Damaged fence, materials spilled into RPA, further inspection requirements, damage to tree*	*E.g. Reinstate fencing, make good levels with topsoil*
2			
3			

CIRCULATION:
Mr XXX
Mr XXX

Appendix E

TPO Information

THE COUNCIL OF THE BOROUGH OF HAVANT.

TOWN AND COUNTRY PLANNING ACTS 1962 and 1968.

CIVIC AMENITIES ACT. 1967.

TREE PRESERVATION ORDER No.878.

The COUNCIL OF THE BOROUGH OF HAVANT (in this Order called "The Authority") in pursuance of the powers conferred by Section 29 of the Town and County Planning Act, 1962, and Section 16 of the Civic Amenities Act, 1967, and subject to the provisions of the Forestry Act, 1967, hereby make the following order:-

1. In this Order -

"The Act" means the Town and Country Planning Act, 1962; "owner" means the owner in fee simple, either in possession or who has granted a lease or tenancy of which the unexpired portion is less than three years; lessee (including a sub-lessee) or tenant in possession, the unexpired portion of whose lease or tenancy is three years or more; and a mortgagee in possession; and "the Minister" means the Secretary of State for the Environment.

2. Subject to the provisions of this Order and to the exemptions specified in the Second Schedule hereto, no person shall, except with the consent of the Authority and in accordance with the conditions, if any, imposed on such consent, cut down, top, lop, uproot, wilfully damage or wilfully destroy or cause or permit the cutting down, topping, lopping, uprooting, wilful damage or wilful destruction of any tree specified in the First Schedule hereto or comprised in a group of trees or in a woodland therein specified, the position of whichtrees, group of trees and woodlands is defined in the manner indicated in the said First Schedule on the map annexed hereto, which map shall, for the purpose of such definition as aforesaid, prevail where any ambiguity arises between it and the specification in the said First Schedule.

3. An application for consent made to the Authority under Article 2 of this Order shall be in writing stating the reasons for making the application, and shall by reference if necessary to a plan specify the trees to which the application relates, and the operations for the carrying out of which consent is required.

4. (1) Where an application for consent ismade to the Authority under this Order, the Authority may grant such consent either unconditionally, or subject to such conditions (including conditions requiring the replacement of any tree by one or more trees on the site or in the immediate vicinity thereof), as the Authority may think fit, or may refuse consent:

Provided that where the application relates to any woodland specified in the First Schedule to this Order the Authority..../....

NOTE: If it is desired to fell any of the trees included in this Order, whether included as trees, groups of trees or woodlands, and the trees are trees for the felling of which a licence is required under the Forestry Act, 1967, application should be made not to the Authority (for consent under this Order) but to the Conservator of Forests (for a Licence under that Act.).

shall grant consent so far as accords with the principles of good forestry, except where, in the opinion of the Authority, it is necessary in the interests of amenity to maintain the special character of the woodland or the woodland character of the area, and shall not impose conditions on such consent requiring replacement or replanting.

(2) The Authority shall keep a register of all applications for consent under this Order containing information as to the nature of the application, the decision of the Authority thereon, any compensation awarded in consequence of such decision and any directions as to replanting of woodlands; and every such register shall be available for inspection by the public at all reasonable hours.

5. Where the Authority refuse consent under this Order or grant such consent subject to conditions they may when refusing or granting consent certify in respect of any trees for which they are so refusing or granting consent that they are satisfied -

(a) that the refusal or condition is in the interest of good forestry;

or

(b) in the case of trees other than trees comprised in woodlands, that the trees have an outstanding or special amenity value.

6. (1) Where consent is granted under this Order to fell any part of a woodland other than consent for silvicultural thinning then unless -

(a) such consent is granted for the purpose of enabling development to be carried out in accordance with a permission to develop land under Part III of the Act, or

(b) the Authority with the approval of the Minister dispense with replanting,

the Authority shall give to the owner of the land on which that part of the woodland is situated a direction in writing specifying the manner in which and the time within which he shall replant such land and where such a direction is given and the part is felled the owner shall, subject to the provisions of this Order and Section 25 of the Countryside Act 1968, replant the said land in accordance with the direction.

(2) Any direction given under paragraph (1) of this Article may include requirements as to -

(a) species;
(b) number of trees per acre;
(c) the erection and maintenance of fencing necessary for protection of the replanting;
(d) the preparation of ground, draining, removal of brushwood, lop and top;

and

(e) protective measures against fire.

7. On imposing any condition requiring the replacement of any tree under Article 4 of the Order, or on giving a direction under Article 6 of this Order with respect to the replanting of woodlands, the Authority shall if such condition or direction relates to land in respect of which byelaws made by a river authority or a drainage board, restrict or regulate the planting of trees, notify the applicant or

to the requirements of the river authority, or drainage board, under those byelaws and the condition or direction shall have effect accordingly.

8. The provisions set out in the Third Schedule to this Order, being provisions of Part III of the Act and of section 80 of the Town and Country Planning Act, 1968 adapted and modified for the purposes of this Order, shall apply in relation thereto.

9. Subject to the provisions of this Order, any person who has suffered loss or damage in consequence of any refusal (including revocation or modification) of consent under this Order or of any grant of any such consent subject to conditions, shall, if he makes a claim on the Authority within the time and in the manner prescribed by this Order, be entitled to recover from the Authority compensation in respect of such loss or damage: Provided that nocompensation shall bepayable in respect of loss or damage suffered by reason of such refusal or grant of consent in the case of any trees the subject of a certificate in accordance with Article 5 of this Order.

10. In assessing compensation payable under the last preceding Article account shall be taken of:

(a) any compensation or contribution which has been paid whether to the claimant or any other person, in respect of the same trees under the terms of this or any other Tree Preservation Order under section 29 of the Act or under the terms of any interim Preservation Order made under section 8 of the Town and Country Planning (Interim Development) Act,1943 or any compensation which has been paid or which could have been claimed under any provision relating to the preservation of trees or protection of woodlands contained in an operative scheme under the Town and Country Planning Act 1932, and

(b) any injurious affection to any land of the owner which would result from the felling of the trees the subject of the claim.

11. (1) A claim for compensation under this Order shall be in writing and shall be made by serving it on the Authority, such service to be effected by delivering the claim at the office of the Clerk of the Authority addressed to the Clerk thereof or by sending it be prepaid post so addressed.

(2) The time within which any such claim shall be made as aforesaid shall be a period of twelve months from the date of the decision of the authority, or of the Minister, as the case may be, or ~~whether~~ where an appeal has been made to the Minister against the decision of the Authority, from the date of the decision of the Minister on the appeal.

12. Any question of disputed compensation shall be determined in accordance with the provisions of section 128 of the Act.

13. (1) It is hereby directed that the provisions of Section 16 of the Civic Amenities Act, 1967, shall apply to this Order and that this Order shall take effect provisionally as from the date on which the Order is made and shall continue in force provisionally until the expiration of a period of six months beginning with that date, or until the date on which the Order is confirmed or, in the case of an Order which can be confirmed only by the Minister, the date on which the Minister notifies the Authority that he does not propose to confirm it, whichever first occurs.

(2) This Order shall apply to any tree specified in the First Schedule hereto, which is to be planted as mentioned therein, as from the time when the tree is planted.

NOTE: Any person contravening the provisions of this Order by cutting down, uprooting or wilfully destroying a tree, or by wilfully damaging, topping or lopping a tree in such a manner as to be likely to destroy it is guilty of an offence

and liable on summary conviction to a fine not exceeding £400 or twice the sum which appearsto the court to be the value of the tree, whichever is the greater, or on indictment to a fine. The penalty for anyother contravention of this Order is a fine not exceeding £200 on summary conviction and, in the case of a continuing offence when the contravention is continued after conviction a person is liable on summary conviction to an additional fine not exceeding £5 for every day on which the contravention is so continued.

If a tree other than one to which an Order applies as part of a woodland is removed, uprooted or destroyed in contravention of an Order or is removed, uprooted or destroyed or dies at a time when its cutting down or uprooting is authorised only by section 60 (6) of the Town and Country Planning Act 1971 relating to trees which are dying or dead or have become dangerous, it is the duty of the owner of the land, unless on his application the local Planning authority dispense with the requirement, to plant another tree of appropriate size and species at the same place as soon as he reasonably can. Except in emergency, not less than 5 days previous notice of the removal etc., should be given to the authority to enable the latter to decide whether or not to dispense with the requirement.

FIRST SCHEDULE

Trees Specified Individually
(encircled in black on the map)

No. on map.	Description.	Situation.
T.1. to T.9.	OAK (Quercus Robur)	On land at Barton's Road/ Horndean Road, Havant specifically shown on drawing No. 3001/6/266.

Trees Specified by References to an Area.
(within a dotted black line on the map)

No. on map.	Description.		Situation.
A.1.	ASH	Fraxinus Excelsior	On land at Barton's Road/ Horndean Road, Havant specifically shown on drawing No. 3001/6/266.
	BEECH	Fagus Sylvatica.	
	OAK	Quercus Robur	

Groups of Trees
(within a broken black line on the map)

No. on Map.	Description	Situation
	NONE	

Woodlands
(within a continuous black line on the map)

No. on Map	Description	Situation
	NONE	

NOTE for Office Use. S.I. 17/1969 states that every heading should be included in the Schedule, and the word "NONE" written in where necessary.

SECOND SCHEDULE

This Order shall not apply so as to require the consent of the authority to

(1) the cutting down of any tree on land which is subject to a forestry dedication covenant where

(a) any positive covenants on the part of the owner of the land contained in the same deed as the forestry dedication covenant and at the time of the cutting down binding on the then owner of the land are fulfilled;

(b) the cutting down is in accordance with a plan of operations approved by the Forestry Commission under such deed.

(2) the cutting down of any tree which is in accordance with a plan of operations approved by the Forestry Commission under the approved woodlands scheme or other grant scheme under section 4 of the Forestry Act 1967 (a)* except a scheme which applies to a forestry dedication covenant;

(3) the cutting down, uprooting, topping or lopping of a tree

(a) in pursuance of the power conferred on the Postmaster General by virtue of Section 5 of the Telegraph (Construction) Act, 1908;

(b) by or at the request of

(i) a statutory undertaker where the land on which the tree is situated is operational land as defined by the Act and either works on such land cannot otherwise be carried out or the cutting down, topping or lopping is for the purpose of securing safety in the operation of the undertaking;

(ii) an electricity board within the meaning of the Electricity Act 1947, where such tree obstructs the construction by the board of any main transmission line or other electric line within the meaning respectively of the Electricity (Supply) Act, 1919, and the Electric Lighting Act, 1882 or interferes or would interfere with the maintenance or working of any such line;

(iii) a river authority established under the Water Resources Act 1963, a drainage board constituted or treated as having been constituted under the Land Drainage Act, 1930, the Conservators of the River Thames, or the Lee Conservancy Catchment Board, where the tree interferes or would interfere with the exercise of any of the functions of such river authority, drainage board, Conservators of the River Thames or Lee Conservancy Catchment Board in relation to the maintenance, improvement or construction of water courses or of drainage works; or

(a)* 1967 C.10.

(iv) the Minister of Defence for the Royal Air Force, the Minister of Technology or the Board of Trade where in the opinion of such Minister or Board the tree obstructs the approach of aircraft to, or their departure from, any aerodrome or hinders the safe and efficient use of aviation or defence technical installations;

(c) where immediately required for the purpose of carrying out development authorised by the planning permission granted on an application made under Part III of the Act, or deemed to have been so granted for any of the purposes of that Part;

(d) which is a fruit tree cultivated for fruit production growing or standing on land comprised in an orchard or garden;

(e) in pursuance of the powers conferred on the Conservators of the River Thames by virtue of Section 105 of the Thames Conservancy Act, 1932.

THIRD SCHEDULE

Provisions of the following parts of (a) Part III of the Town and Country Planning Act, 1962, and (b) Section 80 of the Town and Country Planning Act, 1968, as adapted and modified to apply to this Order.

(a) Part III of the Town and Country Planning Act, 1962.

21. Effect of consents under the Order. (1) Without prejudice to the following provisions as to the revocation or modification of consents, any consent under the Order, including any direction as to replanting given by the authority on the granting of such consent, shall (except insofar as the consent otherwise provides), enure for the benefit of the land and of all persons for the time being interested therein.

22. Reference of applications to the Minister. (1) The Minister may give directions to the authority requiring applications for consent under the Order to be referred to him instead of being dealt with by the authority.

(2) A direction under this section may relate either to a particular application or to applications of a class specified in the direction.

(3) Any application in respect of which a direction under this section has effect shall be referred to the Minister accordingly.

(4) Where an application for consent under the Order is referred to the Minister under this section, the provisions of Articles 4 and 5 of the Order shall apply as they apply to an application which falls to be determined by the authority.

(5) Before determining an application referred to him under this section, the Minister shall, if either the applicant or the authority so desire, afford to each of them an opportunity of appearing before and being heard by, a person appointed by the Minister for the purpose.

(6) The decision of the Minister on any application referred to him under this section shall be final.

23. Appeals against decisions. (1) Where an application is made to the authority for consent under the Order and that consent is refused by that authority or is grantedby them subject to conditions, or where any certificate or direction is given by the authority, the applicant, if he is aggrieved by their decision on the application, or by any such certificate, or the person directed if he is aggrieved by the direction, may by notice under this section appeal to the Minister.

(2) A notice under this section shall be served in writing within

(4) Where an appeal is brought under this section from a decision, certificate or direction of the authority, the Minister, subject to the following provisions of this section, may allow or dismiss the appeal, or may reverse or vary any part of the decision of the authority, whether the appeal relates to that part thereof or not, or may cancel any certificate or cancel or vary any direction, and may deal with the application as if it had been made to him in the first instance.

(5) Before determining an appeal under this section, the Minister shall, if either the appellant or the authority so desire, afford to each of them an opportunity of appearing before, and being heard by, a person appointed by the Minister for the purpose.

(7) The decision of the Minister on any appeal under this section shall be final.

24. Appeal in default of decision. Where an application for consent under the Order is made to the authority, then unless within two months from the date of receipt of the application, or within such extended period as may at any time be agreed upon in writing between the applicant and the authority, the authority either -

(a) give notice to the applicant of their decision on the application; or

(b) give notice to him that the application has been referred to the Minister in accordance with directions given under Section 22 above;

the provisions of the last preceding section shall apply in relation to the application as if the consent to which it relates had been refused by the authority, and as if notification of their decision had been received by the applicant at the end of the said period of two months, or at the end of the said extended period, as the case may be.

27. Power to revoke or modify the consent under the Order. (1) If it appears to the authority that it is expedient to revoke or modify any consent under the Order granted on an application made under Article 3 of the Order, the authority may by Order revoke or modify the consent to such extent as they consider expedient.

(2) Subject to the provisions of Section 16 of the Civic Amenities Act, 1967, and Section 80 of the Town and Country Planning Act, 1968, an Order under this section shall not take effect unless it is confirmed by the Minister; and the Minister may confirm any such Order submitted to him either without modification or subject to such modifications as he considers expedient.

(3) Where an authority submit an Order to the Minister for his confirmation under this section, the authority shall furnish the Minister with a statement of their reason for making the Order and shall serve notice together with a copy of the aforesaid statement on the owner and on the occupier of the land affected, and on any other person who in their opinion will be affected by the Order, and if within the period of twenty-eight days from the service thereof any person on whom the notice is served so requires, the Minister, before confirming the Order, shall afford to that person, and to the authority, an opportunity of appearing before, and being heard by, a person appointed by the Minister for the purpose.

(4) The power conferred by this section to revoke or modify a consent may be exercised at any time before the operations for which consent has been given have been completed:

Provided that the revocation or modification of consent shall not affect so much of those operations as has been previously carried out.

(5) Where a notice has been served in accordance with the provisions of sub-section (3) of this section, no operations or further operations as the case may be, in pursuance of the consent granted, shall be carried out pending the decision of the Minister under sub-section (2) of this section.

(b) Town and Country Planning Act, 1968

80. Unopposed revocation or modification of consent. (1) The following provisions shall have effect where the local planning authority have made an Order (hereinafter called "such Order") under Section 27 above revoking or modifying any consent granted on an application made under a tree preservation order but have not submitted such Order to the Minister for confirmation by him and the owner and the occupier of the land and all persons who in the authority's opinion will be affected by such Order have notified the authority in writing that they do not object to such Order.

(2) The Authority shall advertise the fact that such Order has been made and the advertisement shall specify (a) the period (not less than twenty-eight days from the date on which the advertisement first appears) within which persons affected by such Order may give notice to the Minister that they wish for an opportunity of appearing before, and being heard by, a person appointed by the Minister for the purpose and (b) the period (not less than 14 days from the expiration of the period referred to in paragraph (a) above) at the expiration of which, if no such notice is given to the Minister, such Order may take effect by virtue of this section and without being confirmed by the Minister.

(3) The Authority shall also serve notices to the same effect on the persons mentioned in sub-section (1) above.

(4) The Authority shall send a copy of any advertisement published under sub-section (2) above to the Minister, not more than three days after the publication.

(5) If within the period referred to in sub-section (2) (a) above no person claiming to be affected by such Order has given notice to the Minister as aforesaid and the Minister has not directed that such Order be submitted to him for confirmation, such Order shall at the expiration of the period referred to in sub-section (2) (b) of this section take effect by virtue of this section and without being confirmed by the Minister as required by Section 27 (2) of the Town and Country Planning Act, 1962.

(6) This section does not apply to such Order revoking or modifying a consent granted or deemed to have been granted by the Minister under Part III or Part IV of the Town and Country Planning Act, 1962, or under Part II or Part V of the Town and Country Planning Act, 1968.

THE COMMON SEAL of the)
Council of the Borough of)
Havant was hereunto affixed)
this Twenty-fifth)
day of November nineteen)
hundred and seventy five)
in the pre[redacted]

Borough Secretary

Confirmed by the Council of the Borough of Havant in pursuance of Regulation 6 of the Town and Country Planning (Tree Preservation Order) Regulations, 1969, this Twenty-ninth day of January 1976.

THE COMMON SEAL of the Council)
of the Borough of Havant was)
hereunto affixed)
this Twenty-ninth)
day of January nineteen)
hundred and seventy six)
in the p[redacted])

DATE 25th. November 1975.

THE COUNCIL OF THE BOROUGH OF
HAVANT

Town and Country Planning Acts
1962 and 1968

Civic Amenities Act 1967

TREE PRESERVATION ORDER

No. 878

Land at Barton's Road/
Horndean Road, Havant.

J. FORDER,
TOWN HALL,
HAVANT,
HANTS.

Order Map.

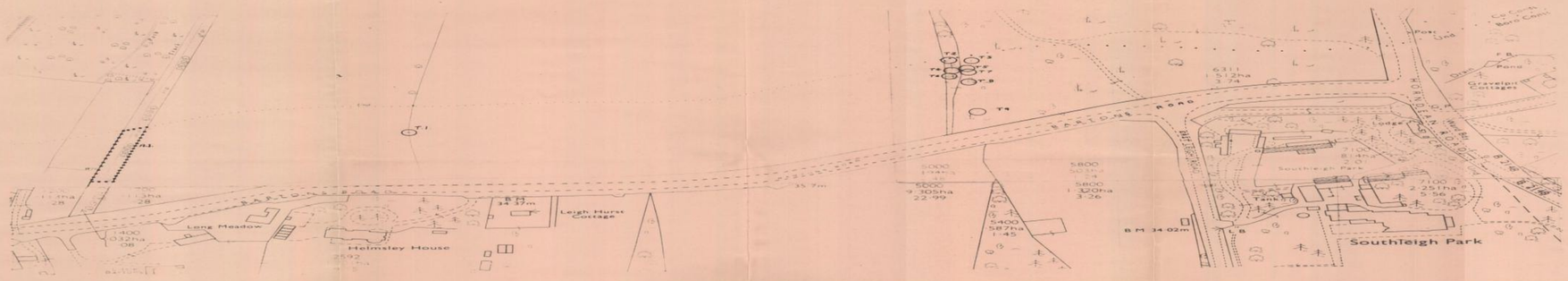

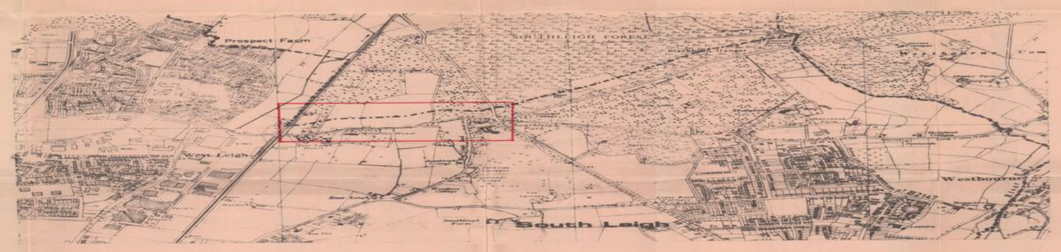

Key Plan.

NO	COMMON NAME.	BOTANICAL NAME.
T.1	Oak	Quercus Robur
T.2	Beech	Fagus Sylvatica
A1	Ash	Fraxinus Excelsior
	Beech	Fagus Sylvatica
	Oak	Quercus Robur

A	All groups and original T.2. (yes) deleted.		G.S.
B.	T.10. deleted		G.P.

D.E.RIDLEY, C.ENG
M.I.C.E. M.I.MUN.E.
DIRECTOR OF TECHNICAL SERVICES

DRAWN BY - G.S.
TRACED BY -
DATE - MAY '95
SCALE - Order Map 1:1250 Key Plan 6" to 1 mile

DRG. NO. 3001/6/266
NEG. NO. 10, 345

BOROUGH OF HAVANT

TREE PRESERVATION ORDER No. 878.
BARTON'S ROAD/HORNDEAN ROAD, HAVANT.

Appendix F

Conservation Area Map

Havant Borough Conservation Areas

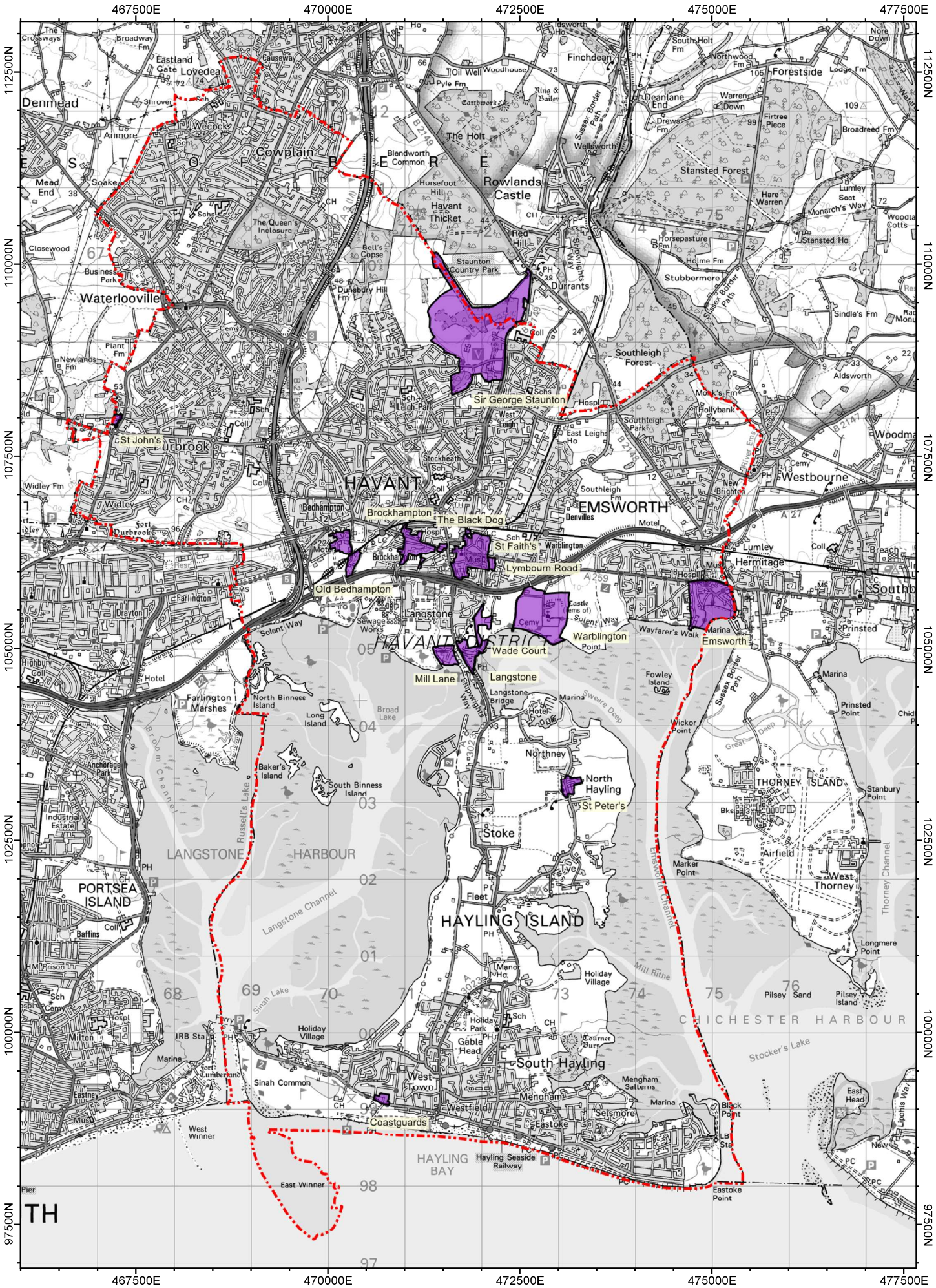

Reproduced from the Ordnance Survey mapping with the permission of the Controller of Her Majesty Office Crown Copyright.
Unauthorised reproduction infringes Crown Copyright and may lead to prosecution or civil proceedings. Crown copyright reserved LC 100024238 2013

Appendix G

Example Tree Protection Barriers (BS5837:2012 Fig 2 & 3)

Figure 2 **Default specification for protective barrier**

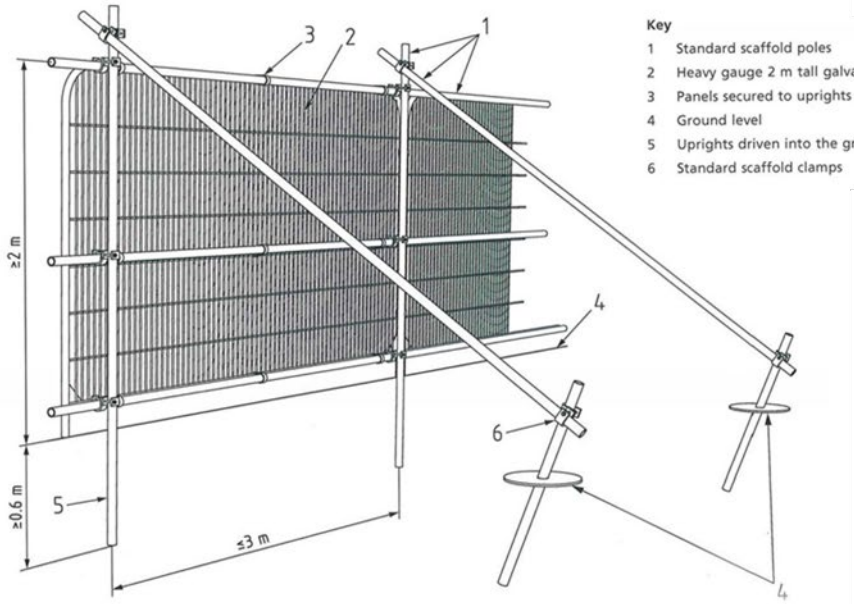

Key

1 Standard scaffold poles
2 Heavy gauge 2 m tall galvanized tube and welded mesh infill panels
3 Panels secured to uprights and cross-members with wire ties
4 Ground level
5 Uprights driven into the ground until secure (minimum depth 0.6 m)
6 Standard scaffold clamps

Figure 3 **Examples of above-ground stabilizing systems**

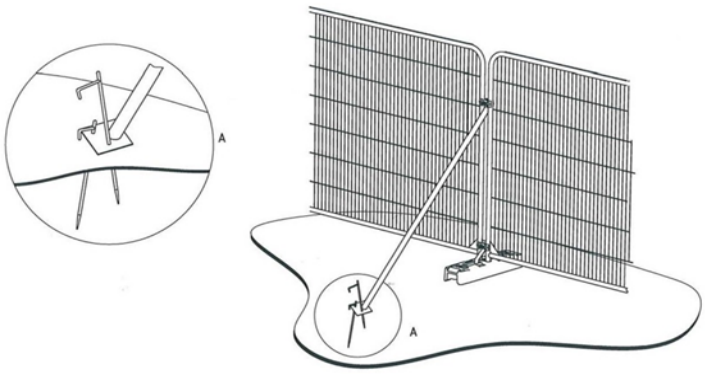

a) Stabilizer strut with base plate secured with ground pins

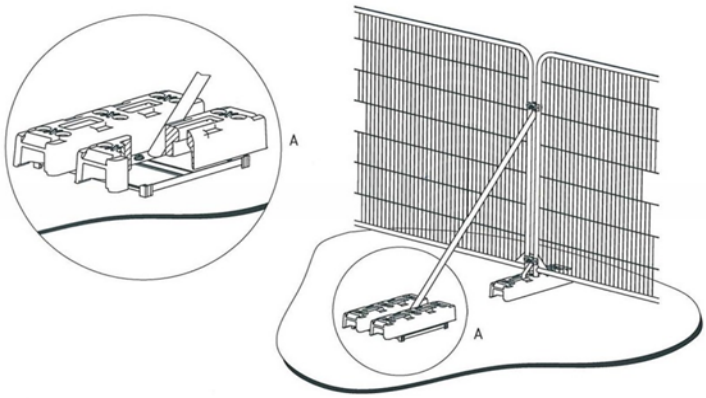

b) Stabilizer strut mounted on block tray

Appendix H

Construction Exclusion Zone (CEZ) Signage

Appendix I

Site Photographs

Appendix J

Arboricultural Glossary

Age-class - A general classification of the tree into either - young, semi-mature, early mature, mature, over-mature, or veteran.

Apical Bud/Shoot – The apical bud, also known as the leading shoot, is responsible for shoot extension and is dominant.

Apical Dominance – A singular, leading shoot remains dominant.

Arboreal - In connection with, or in relation to, trees.

Arboriculturalist – Person who has, through relevant education, training and experience, gained recognised qualifications and expertise in the field of trees in relation to construction.

Arboricultural Implications Assessment (AIA) – Study, undertaken by an arboriculturalist, to identify, evaluate and possibly mitigate the extent of direct and indirect impacts on existing trees that may arise as a result of the implementation of any site layout proposal.

Arboricultural Method Statement (AMS) – Methodology for the implementation of any aspect of development that has the potential to result in the loss of or damage to a tree. Note The AMS is likely to include details of an on-site tree protection monitoring regime.

Asymmetric crown- Crowns that have a morphological bias in a particular direction. This can give the tree an aesthetically unfavourable appearance, but can also subject the tree to uneven wind- loading forces and potentially result in failure.

Basal – Referring to the bottom part of a tree's stem.

Basifugal mortality – A natural process seen in trees in an advanced life stage whereby the trees extremities die back and the inner crown expresses new growth, in order to conserve energy reserves.

Bifurcated - A growth characteristic, where two stems of similar size grow from the same point. Can create an inherent weakness.

Branch union/junction - The point at which a branch joins a larger stem. Can be a point of weakness, especially in certain species.

Brown Rot- Decay caused by certain species of fungus which results in the affected wood becoming brittle and liable to suddenly 'break out', especially if in key structural areas.

Buttress flares – Extensions of the basal stem of a tree that provide additional structural support. See reaction wood.

Bifurcated- A growth characteristic, where two or more stems of similar size grow from the same point. Can create an inherent weakness.

2 **Cable braces** – Cable braces used to support the crown of a tree, reduce impacts caused by wind- throw oscillation.

Canker – A clearly defined area of dead and sunken or malformed bark, caused by bacteria or fungi. Can have a bearing on structural integrity of infected limb(s) depending on size and location.

Central leader- See apical dominance.

Chalara ash dieback- A disease affecting ash trees caused by the fungus *Hymenoscyphus fraxineus*. Usually fatal, the disease causes leaf loss and crown dieback in infected trees. It was first confirmed in Britain in 2012.

Chlorosis- yellowing of leaves which can be caused by a range of factors, often an indicator of nutrient deficiency.

Compaction - The compressing & hardening of soil around tree root systems, due to vehicular/pedestrian use etc. Loss of pore space between soil granules limits water movement and gaseous exchange, and inhibits root growth.

Companion shelter- Shelter provided by neighbouring trees in groups to one another, factors such as wind throw are reduced due to supporting branches and interlocking root systems. Removing individual trees on the peripheries of such groups can expose neighbouring trees to environmental factors they have not previously been subjected to and can lead to individual failure.

Competent person – Person who has training and experience relevant to the matter being addressed and an understanding of the requirements of the particular task being approached

Note 1 A competent person understands the hazards and the methods to be implemented to eliminate or reduce the risks that can arise. For example, when on site, a competent person is able to recognise at all times whether it is safe to proceed.

Note 2 A competent person is able to advise on the best means by which the recommendations of this British Standard may be implemented.

Condition – Assessment based on a visual and professional view giving consideration to many factors such as tree health, structural integrity and suitability of its position.

Conservation dead- wooding- Removal of deadwood using 'coronet cuts' that mimic the way a branch would naturally break off, maximising deadwood habitat availability for invertebrates.

Coppice - The method of managing trees by cutting the stems at between 1.0 inch and 1.0 foot from the ground level on a regular cycle, the cut stumps of the trees or shrubs are allowed to re-grow many new stems.

Crown spread - Gives distances between extreme limits of the crown and the stem, usually along the four compass points. Helps to show crown symmetry.

Crown Reduction – The removal of branch ends to reduce the extreme limits of a trees branch spread and height.

Crown Thin – The removal of selected branches within the crown to thin the internal branch structure.

D.B.H. - 'Diameter at Breast Height', an industry standard to gauge tree stem size and development. Within arboriculture, breast height is taken to be 1.5m above ground level.

Dieback - The reduction in crown vigour and extension growth progressing to death of distal parts; often associated with decline.

Epicormic growth - New growth from dormant buds that can often form tenuous attachments. Although some species readily form such shoots, it can be an indication of stress.

Form - A general assessment of the shape and position of the tree within its environment.

Hanger – Term used to describe a branch that has become detached and is being supported by other branches. Can be a hazard to persons and property below.

Hazard Beam – After the loss of a distal part, a limb concentrates growth upwards creating adverse end weights that can render the limb susceptible to failure. .

Included bark – Growth characteristic usually caused when two or more stems/branches growing in close proximity 'fuse' together entrapping the bark from when the parts were separate in the middle, creating a structural weakness.

Invertebrate tower – Pollarding of a (usually dead) tree to a safe height that leaves part of the main stem as a deadwood habitat for invertebrate species.

Occlusion/Occluded – Normally used to describe the overgrowth of a wound. Also, immoveable foreign objects in contact with a tree part can become encased or 'occluded' by the tree as it grows incrementally.

Pathogen - An agent that causes disease, especially a living microorganism such as a bacterium or fungus.

Phototropic growth – Growth responding to a light stimulus i.e. the sun. This can influence the form of a tree, particularly where other factors e.g. buildings or other trees, affect the amount/ direction light is received.

Pollard – The removal and subsequent regular re-removal of the crown of a tree above animal browsing height. Can be an effective method of controlling the size of trees in urban areas. This is ideally begun in the trees early stages and maintained throughout its life.

Reaction wood - Essentially additional wood laid down by the tree to compensate for structural defects such as cavities.

Rhizosphere - The rhizosphere is the narrow region of soil that is directly influenced by root secretions and associated soil microorganisms. In particular, mycorrhizal fungi form a symbiotic relationship with trees and assist in the assimilation of phosphates essential to the trees health.

Ring barking/Girdling – the removal of bark around the entire circumference of a stem or branch, causing the death of all distal parts.

Root Protection Area (RPA) – Layout design tool indicating the area surrounding a tree that contains sufficient rooting volume to ensure the survival of the tree, shown in plan form in m².

Scaffold limbs - The main structural branches within the crown.

Tree protection plan – scale drawing prepared by an arboriculturalist showing the finalised layout proposals, tree retention and tree and landscape protection measures detailed within the arboricultural method statement (AMS), which can be shown graphically.

U.L.E – 'Useful Life Expectancy' is an estimate based on currently known factors of the possible remaining life of the tree as an asset. AKA 'Estimated remaining contribution'.

Veteran tree – Tree that, by recognised criteria, shows features of biological, cultural or aesthetic value that are characteristic of, but not exclusive to, individuals surviving beyond the typical age range for the species concerned.

Vigour - A general classification, as to the present and future potential growth and development of a tree. A comment regarding the health status of the tree specific to its species.

White Rot - A type of decay caused by certain species of fungi which results in the affected wood becoming flexible with little compressive strength.