# RMTTree Consultancy Ltd

# BS5837:2012
# Arboricultural Survey
# Implications Assessment
# &
# Arboricultural Method Statement

## Site Address:
## Land between
## 26 and 32 Padnell Road
## Cowplain
## PO8 8DZ

**Robert Toll**
**HND Urban Forestry - ND Forestry - MArborA**

**Ref: RMT565**
**Site Inspection Date: 6th January 2021**
**Date Report Published: 12th January 2021**

Arboricultural ASSOCIATION Professional Member
PRO2239

**Contents**


| Ref no. | Title | Page no. |
|---|---|---|
| | Title Page | |
| | Contact and Report Details | |
| | Contents | |
| 1 | Direction | 1 |
| 2 | Purpose of This Report | 1 |
| 3 | Limitations | 1 |
| 4 | Soil Assessment | 2 |
| 5 | Site Description | 3 |
| 6 | Legal Restrictions | 3 |
| 7 | Proposal | 3 |
| 8 | Background | 3 |
| 9 | Arboricultural Implications Assessment | 5 |
| 10 | Arboricultural Method Statement | 6 |
| 11 | Conclusions | 10 |
| | Appendix 1 – British Standard 5837:2012 tree categorisation chart | 11 |
| | Appendix 2 – Tree survey schedule | 12 |
| | Appendix 3 – Tree Constraints Plan – RMT565 – TCP | 13 |
| | Appendix 4 – Tree Protection Plan – RMT565 – TPP | 14 |
| | Appendix 5 – Arboricultural site supervision schedule | 15 |
| | Appendix 6 – Site monitoring form | 16 |
| | Appendix 7 – Qualifications and experience | 17 |

## 1. Direction

**1.1** To undertake an inspection of trees that are on or adjacent to land between 26 and 32 Padnell Road, Cowplain, PO8 8DZ in accordance with British Standard 5837:2012 Trees in relation to design, demolition and construction – Recommendations.

**Figure 1** – Land between 26 and 32 Padnell Road, Cowplain, PO8 8DZ

Image courtesy of Google Map Data © 2019

## 2. Purpose of this report

**2.1** This report provides clarification of the above and below ground arboricultural constraints in order to inform the site layout design relating to the proposed development on land between 26 and 32 Padnell Road, Cowplain, PO8 8DZ.

## 3 Limitations

**3.1** The survey was carried out from ground level using my observations of the trees.

**3.2** A topographical survey was carried out prior to the tree survey being carried out.

**3.3** All measurements taken to calculate root protection areas and canopy spreads have been measured wherever possible. Where it has not been possible to access certain areas, dimensions have been estimated.

**3.4** This report does not constitute a safety survey of the trees included within it. It is advised that if there are concerns regarding the risk posed by trees to persons and property then a tree condition survey should be commissioned.

## 4 Soil Assessment

**4.1** No soil assessments have been undertaken however a check the British Geological Survey gives the soil type as London Clay Formation - Clay, Silt and Sand. This means that the underlying soil will be shrinkable and as such foundations will need to be deepened. If further assessments are undertaken that show that there is shrinkable clay, then foundations to must be designed in accordance with the guidance within the National House Building Council's Standards Chapter 4.2 Building near trees.

**Figure 2** – The British Geological Survey indicates that the soil make-up at land between 26 and 32 Padnell Road, Cowplain, PO8 8DZ is shrinkable London Clay Formation - Clay, Silt and Sand.

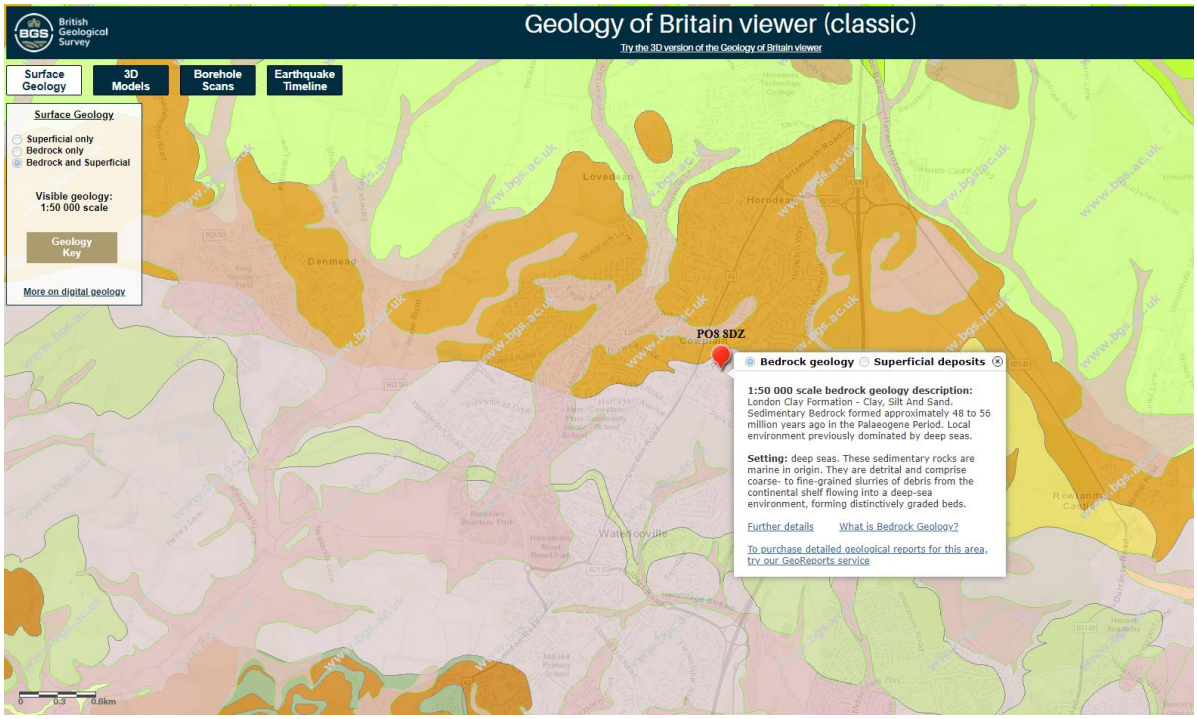

## 5 Site Description

**5.1** The site is an open piece of land which is accessed from Padnell Road to the north. To the east and west are residential properties, and to the south are the grounds of Padnell Junior School.

## 6 Legal Restrictions

**6.1** The local planning authority (LPA) has not been contacted directly to ascertain whether the trees on or adjacent to the site are protected by Tree Preservation Orders (TPO) or if they are within a Conservation Order.

**6.2** A check on the Havant Borough Council online protected tree checking facility indicates that the trees growing within the school grounds to the south of the site are under the protection of an area TPO2107. This means that any tree that was growing in the indicated area when the TPO was made is protected. The online system does not provide a date when the TPO was made.

**6.3** Trees protected by a TPO benefit from statutory protection and no work can be carried out to them (including cutting roots, branches or felling) without the written consent of the local planning authority. However, the granting of planning permission allows trees to be removed if they are shown as being removed on approved plans.

## 7 Proposal

**7.1** Erection of building containing 6 flats with associated car parking and bin/cycle storage.

## 8 Background

### Tree categorisation

**8.1** A total of two trees and one group were surveyed. At the time of inspection one tree was considered to be category A and high value and one tree was considered to be category B and moderate value. The remaining group was considered to be category C and of low value.

**8.2** In general category C groups should not be considered a material constraint to development.

**8.3** All trees were categorised in accordance with British Standard 5837:2012 as shown at **Appendix 1**.

**8.4** It was noted that there are other trees that are located on or adjacent to land between 26 and 32 Padnell Road, Cowplain, PO8 8DZ but they have not been included within this report. This is because it is deemed that they are:

- far enough from the area proposed for development that they will not be affected;
- they will be adequately protected by the tree protection measures afforded to the surveyed trees;
- they are specimens of limited significance;

**Root protection area (RPA) definition**

**8.5** Layout design tool indicating the minimum area around a tree deemed to contain sufficient roots and rooting volume to maintain the tree's viability, and where the protection of the roots and soil structure is treated as a priority.

(*British Standard 5837:2012 – Trees in relation to design, demolition and construction – Recommendations – The British Standard Institute 2012).*

**Canopy spreads**

**8.6** The canopy spreads have been measured from ground level using a laser measure and visual assessment.

**Measurements**

**8.7** Wherever possible all diameter at breast height measurements have been measured using a DBH tape. Where it has not been possible access the stems at 1.5m above ground level due such things as dense Ivy, trees being offsite or the tree being inaccessible, an estimated measurement has been taken. All estimated measurements include the word "estimated" or the abbreviation "est".

## 10 Arboricultural Implications Assessment

### Tree protection fencing

**10.1** Tree protection fencing will be required throughout the construction process to restrict construction access within the RPA of tree T1 Oak. The areas to be protected by the tree protection fencing can be seen as blue lines on the accompanying Tree Protection Plan at **Appendix 4**.

**10.2** Tree protection fencing will consist of a scaffold framework, well braced to resist impacts, with vertical tubes spaced at a maximum intervals of 3m. Onto this, weld mesh panels or 2m high shuttering board will be securely fixed with wire or scaffold clamps.

**10.3** Un-braced weld mesh panels on unsecured rubber or concrete feet will not be used as these are not resistant to impact and are too easily removed by site operatives. An alternative system of bracing which does not require a scaffold framework may be practical however this will need the written consent of the LPA. A notice will be attached to the fencing which says 'Tree Protection Area. Keep Out!'

### Areas for site compounds, storage and mixing

**10.4** Site compounds will be located away from trees wherever possible and ideally 2m from any protective barriers. They will not be sited under tree canopy spreads or within RPAs.

**10.5** It is proposed that the area to the front of the site will be used for site compounds, storage and mixing.

### Services

**10.6** The proposed layout of incoming services is not yet established but they should be installed outside root protection areas. If it is necessary for a trench to be dug through an RPA a specific method statement will be required which will need to specify that the trench will be hand dug and that care will be taken to preserve all roots encountered which are larger than 25 mm diameter.

**10.7** It is anticipated that services will be routed from Padnell Road so there will be no need for them to pass through RPAs.

## 11 Arboricultural Method Statement

### Pre-commencement meeting

**11.1** Prior to the commencement of development all tree protection will be erected and a site meeting will be held between the appointed building contractors, the appointed arboriculturalist and local authority Tree Officer as detailed at **Appendix 5**. This meeting will ensure that the position of the tree protection is correct and methods of protecting trees are understood.

### Protective barriers/fencing

**11.2** All tree protection barriers will be erected in the positions shown at **Appendix 4** and in accordance with the specifications detailed in figures 3, 4 and 5.

**Figure 3** – Default specification for protective barrier

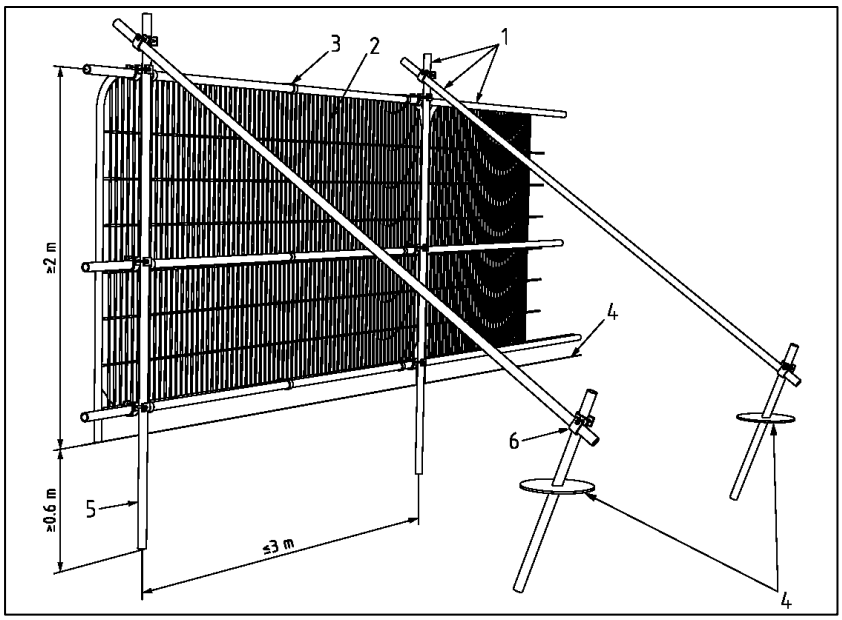


### Key

1. Standard scaffold poles
2. Heavy gauge 2m tall galvanized tube and welded mesh infill panels
3. Panels secured to uprights and cross-members with wire ties
4. Ground level
5. Uprights driven into the ground until secure (minimum depth 0.6m)
6. Standard scaffold clamps

*Image taken from British Standard 5837:2012 – Trees in relation to design, demolition and construction – Recommendations*

**Figure 4 and 5** – Examples of above-ground stabilizing systems

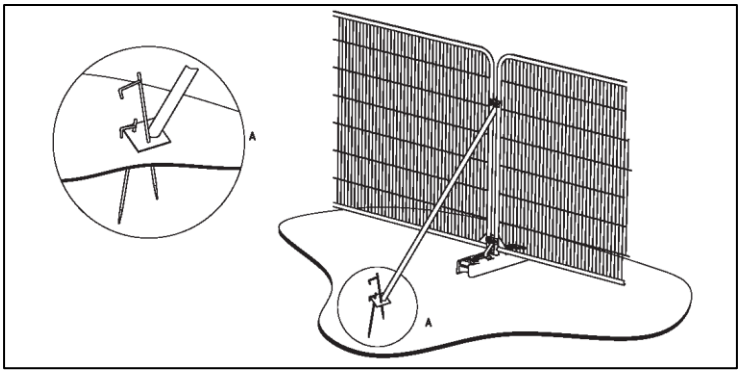


a) Stabilizer strut with base plate secured with ground pins

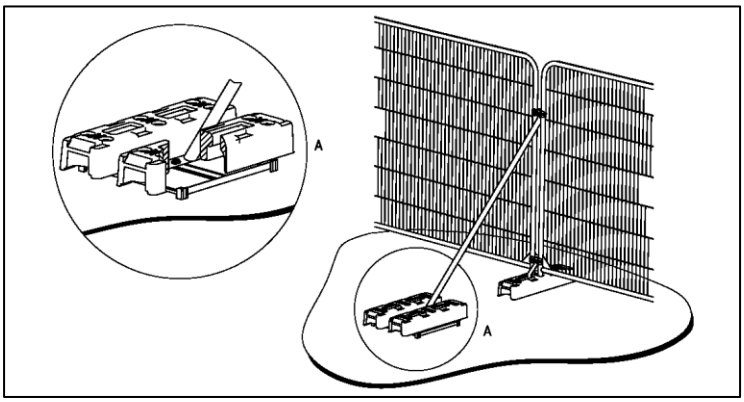


b) Stabilizer strut mounted on block tray

*Image taken from British Standard 5837:2012 – Trees in relation to design, demolition and construction – Recommendations.*

**Warning signs**

**11.3** All weather notices will be attached to the tree protection fencing.

**Figure 6** – Examples of tree protection warning sign.

**11.4** Development can commence in accordance with the planning consent.

**Burning of waste**

**11.5** No fires will be lit on site within 3m of root protection areas, due to the danger of scorching of leaves and branches of overhanging trees.

**Space for machinery, parking of vehicles, storage of materials and site huts**

**11.6** All machinery required on site will operate outside of root protection areas or from existing hardstanding. Site huts and accommodation, if required, will be located outside root protection areas.

**Arboricultural supervision**

**11.7** It is recommended that an appointed arboriculturalist is instructed to oversee tree protection for the duration of the construction/landscaping contract(s). Alternatively, a designated person (site foreman or site owner) should take on the responsibility of overseeing tree protection. If appointed, the appointed arboriculturist will be consulted on any issues that may arise concerning trees and will visit the site as often as necessary to ensure that trees are protected and/or at the following key stages:

- Prior to contractors commencing works on site in order to meet with the supervising architect and/or the contractor's nominated site manager and Tree Officer to ensure that the principles of tree protection are understood and the procedure, timescale and materials for installation of tree protection are agreed;

- Following installation of tree protection but prior to any works commencing on site to confirm that it is fit for purpose;

- At any time that there are potential conflicts with tree protection;

- At the completion of construction works to confirm that tree protection may be removed to enable final landscaping;

**11.8** A pre-start meeting should be held on site with the appointed arboriculturist and the contractor's representative(s) so that the precise details of the schedule of works together with details of installation of tree protection can be agreed and personnel induction carried out. The site manager/foreman will be fully briefed on tree protection measures and procedures before any workers or sub-contractors are permitted onto the site.

**11.9** All contractors involved in the project have a duty to comply with all the specified tree protection measures and all workers will be provided with induction by the site manager/foreman and be required to sign an Induction Sheet confirming they have understood the protection measures. Signed sheets will be kept on site for inspection.

**11.10** No enabling works will take place until after the meeting has been held and tree protection has been installed, inspected and approved as fit for purpose.

**11.11** Fencing and ground protection will not be removed under any circumstances during construction unless with the express approval of the local planning authority

**11.12** Following completion of all development the tree protection can be dismantled to allow landscaping works to take place.

**Landscaping**

**11.13** Once construction has demonstrably finished (to the satisfaction of the appointed arboriculturist) fencing may be removed in order to allow final landscaping to be undertaken. Landscaping plans have been/will be prepared by others and will not/do not involve any changes in soil levels, digging of any trenches or construction of masonry or retaining walls within root protection areas.

## 12 Conclusions

**12.1** A BS5837: 2012 survey of two trees and one group has been carried out on or adjacent land between 26 and 32 Padnell Road, Cowplain, PO8 8DZ.

**12.2** At the time of inspection one tree was considered to be category A and high value and one tree was considered to be category B and moderate value. The remaining group was considered to be category C and low value.

**12.3** The proposed development does not require any tree works to be carried out.

**12.4** The trees to be retained will be protected during development and methods for ensuring their protection have been described.

## Appendix 1 – British Standard 5837:2012 tree categorisation chart

| TREES UNSUITABLE FOR RETENTION | | |
|---|---|---|
| CATEGORY AND DEFINITIONS | CRITERIA | IDENTIFICATION ON PLAN |
| **Category U**<br><br>Those in such a condition that they cannot realistically be retained as living trees in the context of the current land use for longer than 10 years | • Trees that have a serious, irremediable, structural defect, such that their early loss is expected due to collapse, including those that will become unviable after removal of other category U trees (e.g. where, for whatever reason, the loss of companion shelter cannot be mitigated by pruning).<br>• Trees that are dead or are showing signs of significant, immediate, and irreversible overall decline.<br>• Trees infected with pathogens of significance to the health and/or safety of other trees nearby, or very low quality trees suppressing adjacent trees of better quality.<br><br>*NOTE Category U trees can have existing or potential conservation value which it might be desirable to preserve; see **4.5 of BS5837:2012*** | RED<br>RGB 127.000.000 |

| TREES TO BE CONSIDERED FOR RETENTION | | | | |
|---|---|---|---|---|
| CATEGORY AND DEFINITIONS | CRITERIA - SUBCATEGORIES | | | IDENTIFICATION ON PLAN |
| | 1 Mainly arboricultural values | 2 Mainly landscape values | 3 Mainly cultural values, including conservation | |
| **Category A**<br>**Trees of high quality**<br>with an estimated remaining life expectancy of at least 40 years | Trees that are particularly good examples of their species, especially if rare or unusual; or those that are essential components of groups or formal or semi-formal arboricultural features (e.g. the dominant and/or principal trees within an avenue). | Trees, groups or woodlands of particular visual importance as arboricultural and/or landscape features. | Trees, groups or woodlands of significant conservation, historical, commemorative or other value (e.g. veteran trees or wood-pasture) | LIGHT GREEN<br>RGB<br>000.255.000 |
| **Category B**<br>**Trees of moderate quality**<br>with an estimated remaining life expectancy of at least 20 years | Trees that might be included in category A, but are downgraded because of impaired condition (e.g. presence of significant though remediable defects, including unsympathetic past management and storm damage), such that they are unlikely to be suitable for retention for beyond 40 years; or trees lacking the special quality necessary to merit the category A designation. | Trees present in numbers, usually growing as groups or woodlands, such that they attract a higher collective rating than they might as individuals; or trees occurring as collectives but situated so as to make little visual contribution to the wider locality. | Trees with material conservation or other cultural value | MID BLUE<br>RGB<br>000.000.255 |
| **Category C**<br>**Trees of low quality**<br>with an estimated remaining life expectancy of at least 10 years, or young trees with a stem diameter below 150 mm | Unremarkable trees of very limited merit or such impaired condition that they do not qualify in higher categories. | Trees present in groups or woodlands, but without this conferring on them significantly greater collective landscape value; and/or trees offering low or only temporary/transient landscape benefits. | Trees with no material conservation or other cultural value. | GREY<br>RGB<br>091.091.091 |

## Appendix 2 - Tree survey schedule

| Tree No. | Species | Height (m) | Trunk dia. at 1.5m | Canopy Spread | Crown Height (m) | Age Class | Physiological Condition | Structural Condition | Comments/ Recommendations | Useful Life Expect | BS5837 grade | Root Protection Area | |
|---|---|---|---|---|---|---|---|---|---|---|---|---|---|
| | | | | | | | | | | | | Radius | RPA Area |
| T1 | Common Oak *(Quercus robur)* | 20m | 900mm est | N8m E8m S11m W8m | 8m | Mature | Good | Good | Off-site tree Medium deadwood. | 40+ | A | 10.8m | 366.4m² |
| T2 | Common Oak *(Quercus robur)* | 16m | 300mm est | N4m E4m S4m W4m | 7m | Early mature | Good | Good | Off-site tree. | 40+ | B | 3.6m | 40.7m² |
| G3 | Group of Common Ash Sycamore | Max 12m | Max 150mm | - | - | Young | Fair | Fair | Off-site group. Group consisting of natural regeneration. Several dead trees are close to the boundary with the proposal site. | 10+ | C | 1.8m | 10.2m² |

## Appendix 3 – Tree Constraints Plan – RMT565 – TCP

**Tree constraints plan (TCP) showing retained trees, tree numbers, root protection areas (magenta circles/polygons) and canopy spreads (green lines). The plan has been provided separately as a PDF at a scale of 1: 200 @ A2.**

| RMTTree Consultancy Ltd | | Key | Address: Land between 26 and 32 Padnell Road, Cowplain, PO8 8DZ | | | |
|---|---|---|---|---|---|---|
| Title | Tree Constraints Plan | Root Protection Area | | | | |
| Drawing no. | RMT565 - TCP | Canopy Spreads | | | | |
| Scale | 1:200 @ A2 | | | | | |
| Date | January 2021 | | | | | |

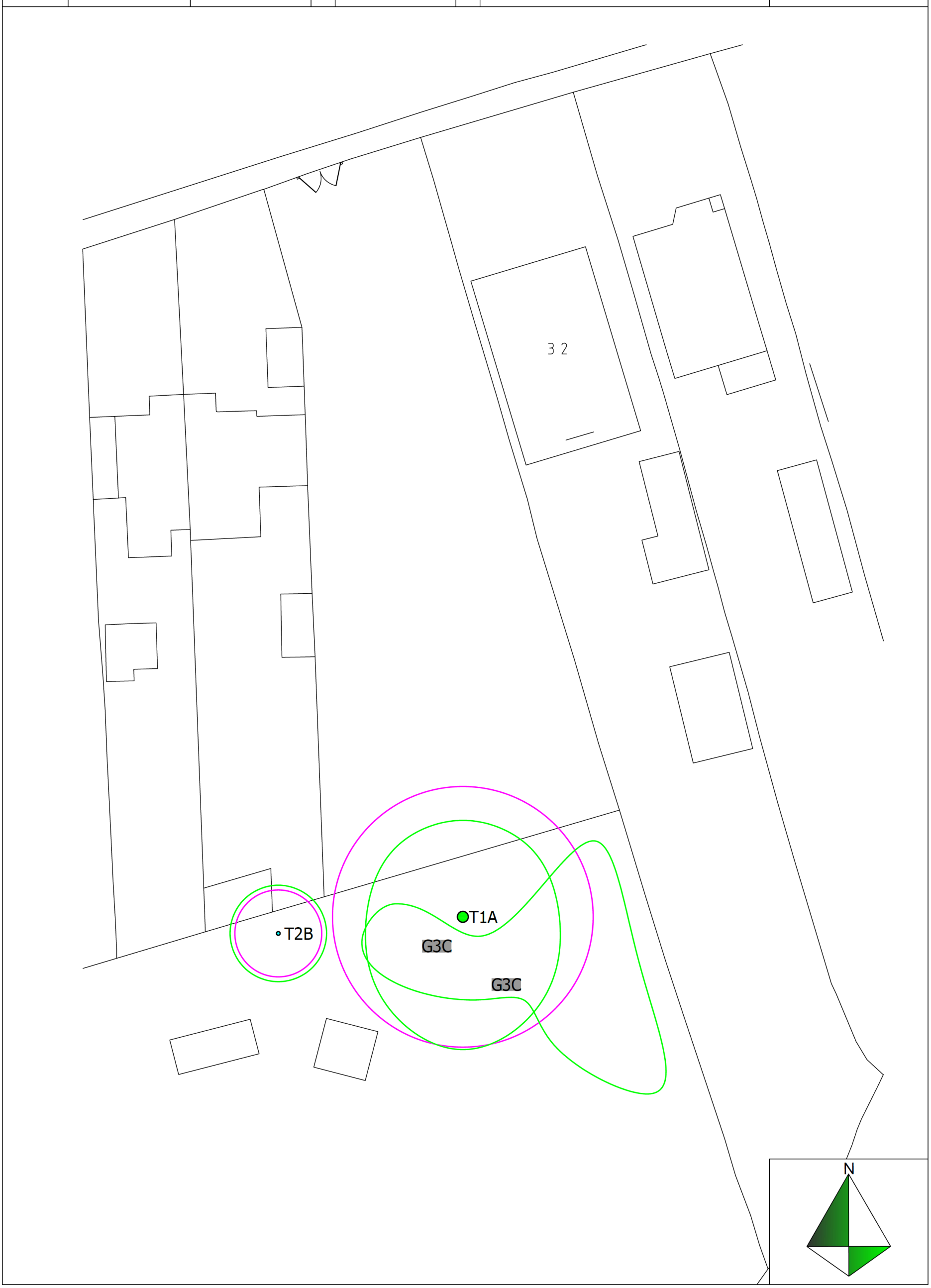

## Appendix 4 – Tree Protection Plan – RMT565 – TPP

**Tree protection plan (TPP) showing retained trees, tree numbers, root protection areas (magenta circles/polygons) and canopy spreads (green lines). The location of protective fencing is shown as blue lines. The plan has been provided separately as a PDF at a scale of 1: 200 @ A2.**

| RMTTree Consultancy Ltd | | Key | Address: Land between 26 and 32 Padnell Road, Cowplain, PO8 8DZ | | | |
|---|---|---|---|---|---|---|
| Title | Tree Protection Plan | Root Protection Area | | | | |
| Drawing no. | RMT565 - TPP | Canopy Spreads | | | | |
| Scale | 1:200 @ A2 | Tree Protection Fencing | | | | |
| Date | January 2021 | Construction Exclusion Zone | CEZ | | | |

0 5 10

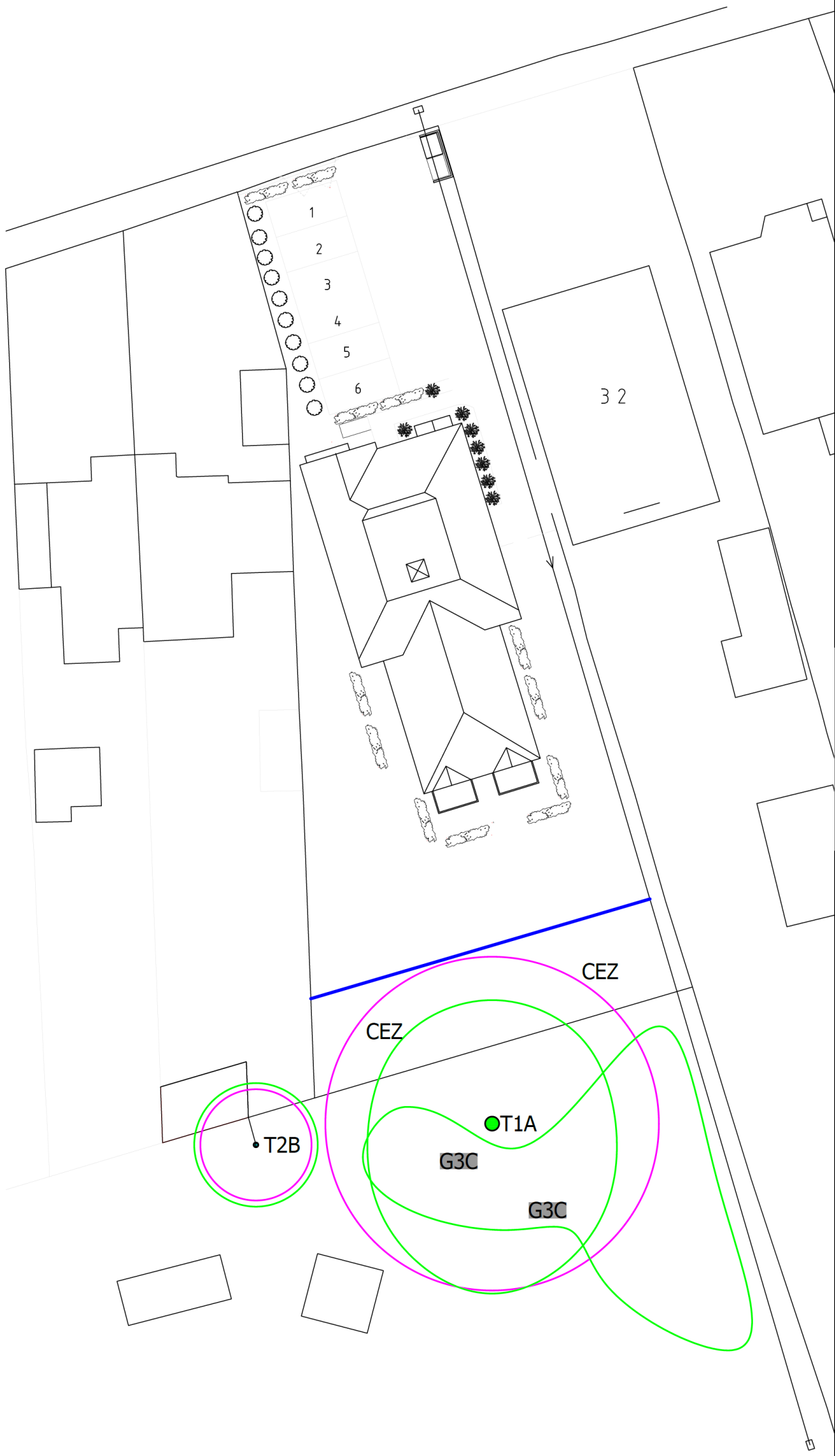


**Default specification for protective barrier**

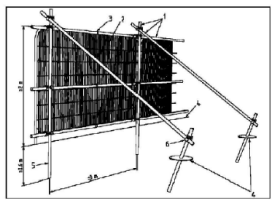

**Key**

1. Standard scaffold poles
2. Heavy gauge 2m tall galvanized tube and welded mesh infill panels
3. Panels secured to uprights and cross-members with wire ties
4. Ground level
5. Uprights driven into the ground until secure (minimum depth 0.6m)
6. Standard scaffold clamps

*Image taken from British Standard 5837:2012 – Trees in relation to design, demolition and construction - Recommendations*

**Examples of above-ground stabilizing systems**

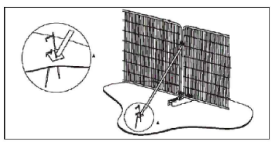

a) Stabilizer strut with base plate secured with ground pins

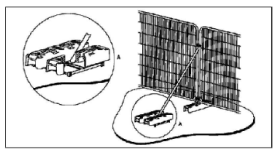

b) Stabilizer strut mounted on block tray

*Image taken from British Standard 5837:2012 – Trees in relation to design, demolition and construction – Recommendations.*

**Example of tree protection warning sign**

**TREE PROTECTION AREA**
**KEEP OUT!**

TREES ENCLOSED BY THIS FENCE ARE PROTECTED BY PLANNING CONDITIONS
THE FOLLOWING MUST BE OBSERVED BY ALL PERSONS:

- PROTECTIVE FENCING MUST NOT BE MOVED
- NO PERSON SHALL ENTER THE PROTECTED AREA
- NO MACHINE OR PLANT SHALL ENTER THE PROTECTED AREA
- NO MATERIALS SHALL BE STORED IN THE PROTECTED AREA
- NO SPOIL SHALL BE DEPOSITED IN THE PROTECTED AREA
- NO EXCAVATION SHALL OCCUR IN THE PROTECTED AREA

Root Protection Areas and Construction Exclusion Zones

- All tree protection measures will be erected as agreed within the BS5837:2012 Arboricultural Survey, Implications Assessment and Arboricultural Method Statement;
- There will be access to foot or vehicular traffic within fenced off areas once development (including demolition) has commenced;
- Once development (including demolition) has commenced the tree protection must not be moved for any reason without the written consent of the local planning authority;
- There will be no excavations, storage of materials, mixing of materials or dumping of spoil within construction exclusion zones (CEZ) unless agreed in writing with the local planning authority;
- All caustic substances e.g. oil, diesel, cement etc will not be stored within 2m of CEZs;
- No fires will be lit within 10m of CEZs or tree canopies;
- Protection area signage will be displayed on protective barriers for the duration of development;

PLEASE BE AWARE – The tree protection specified on this tree protection plan and within the Arboricultural Survey, Implications Assessment and Arboricultural Method Statement document are conditioned to be erected. Failure to protect trees in full accordance with the approved scheme is likely to result in local planning authority taking enforcement action, including prosecution.

N

## Appendix 5 – Arboricultural site supervision schedule

| Activity | Supervision Required |
|---|---|
| Pre-commencement meeting between the local authority arboricultural officer, the appointed arboricultural consultant and the appointed building contractor. | ✓ |
| At any time that there are conflict issues with the agreed tree protection. | ✓ |

Following every visit the appointed arboriculturalist will fill out the site monitoring form which is shown at **Appendix 6** and this will be forwarded to the LPA.

## Appendix 6 – Site monitoring form

| | | | |
|---|---|---|---|
| RMTTree Consultancy Ltd | | | |
| **Site Monitoring Form** | | | |
| **Date of Visit** | | **Site** | |
| **Consultant in Attendance** | | | |
| **Observations/Status of Tree Protection/Comments:** | | | |
| | | | |
| **Recommendations (if necessary):** | | | |
| | | | |
| **Date of Next Visit** | | **Signature** | |

## Appendix 7 – Qualifications and experience

Robert Toll has been working with trees since 2004 when he completed his studies.

In 2000 he began his studies at Riseholme College, Lincoln where achieved a pass with merit in Forestry at National Diploma level. In 2002 he attended Moulton College in Northampton where he gained a Level Five Higher National Diploma in Urban Forestry with merit.

In 2004 Robert began work as a temporary tree inspector at Northampton Borough Council, undertaking inspections of trees in response to enquiries from the public. After 4 months Robert took up a permanent tree inspector role at Coventry City Council which predominantly involved undertaking safety inspections of trees on school sites.

In 2006 Robert moved to Warwick District Council to take up a temporary post of Tree Protection Officer which involved reviewing old area tree preservation orders and identifying those trees which were considered worthy of protection under new specific orders. He also streamlined the council procedure for making new tree preservations orders, cutting the time from making to serving from up to 2 weeks to within 2 hours.

In 2008 Robert moved to Hart District Council, Hampshire to take up the role of Tree Officer within the planning department. This role included determining works trees applications, commenting on planning proposals, liaising with the public and providing arboricultural advice to other departments within the Council.

Between 2014 and 2016 Robert took up the role of Tree Officer at Elmbridge Borough Council, Surrey, once again carrying out tasks such as determining works trees applications, commenting on planning proposals and liaising with the public. While at Elmbridge Borough Council he passed the Arboricultural Association's Professional Tree Inspection course.

Since leaving local authority employment Robert has provided locum arboricultural assistance to several local authorities including Elmbridge Borough Council, Woking Borough Council, Test Valley Borough Council, Epsom and Ewell Borough Council and Rushmoor Borough Council.

Robert is a professional member of the Arboricultural Association.