07564346560
Oliver@fallenandfound.co.uk
www.fallenandfound.co.uk

2
Selsdon Avenue
Romsey
Hampshire
SO51 7PL

Fallen&Found Arboriculture Ltd

Company No: 11872391 / VAT Registration 317617696

Arboricultural Impact Appraisal & Preliminary Arboricultural Method Statement

Q0109 52 Bath Rd AIA+(P)AMS_V1

Friday 719th March 2021

52
Bath Rd
Emsworth
Hampshire
PO10 7ES

Contents

Contents 1
1. Introduction 4
1.1. Instruction 4
1.2. Scope 4
1.3. Document disclosure 5
1.4. Land Survey 5
1.5. Ecological constraints 5
1.6. Qualifications and experience 5
2. Site and proposal 6
2.1. Site visit 6
2.2. Site location 6
2.3. Site description 6
2.4. Proposed development 6
3. Arboricultural Impact Assessment 7
3.1. Introduction 7
3.2. Tree retention/removal and pruning 7
Trees, groups and hedgerows to be retained. 7
Trees, groups and hedgerows to be removed. 7
Trees, groups and hedgerows to be pruned. 7
3.3. Additional implications arising from the development 9
3.3.1. Construction within the RPA 9
3.3.2. Movement of construction machinery and staff parking 9
3.4. Tree protection 9
3.5. Ground-level changes 10
3.6. Services 10
3.7. The proximity of existing trees to proposed structures 10
3.7.1. Direct and indirect impacts of trees 10
3.7.2. Seasonal nuisance 11
3.7.3. Future pressure to prune or fell 11
3.7.4. Shading, orientation and windows 11
3.8. Conclusion 11
Preliminary Arboricultural Method Statement 12

1. Summary 13
2. Site-specific considerations 13
3. Sequencing, monitoring, and supervision 14
3.1. Auditing and inspection regime 14
4. Sequenced methods of construction and tree protection 14
4.1. Pre-commencement meeting 14
4.2. Conduct agreed on tree works 15
4.3. Erect tree protection barriers and temporary ground protection 15
4.3.1. Form 15
4.3.2. Location 16
4.3.3. Setting out 16
4.3.4. LPA Involvement 16
4.3.5. Construction Exclusion Zone 17
4.3.6. Prohibitions 17
4.4. Staff parking, storage of materials and chemical mixing 17
4.5. Main construction process 18
4.6. The dismantling of tree protective measures 19
4.7. Soft landscaping and new planting 19
4.8. Amendments 19
4.9. Communication details, monitoring & compliance 20
Appendix A 21
Tree Survey Schedule 21
Appendix B 22
Tree Protection Plan (Q0109\52BathRd\TPP_V1) 22
Appendix C 23
Figure 1 24
Default Tree Protective Fencing 24
Figure 2 25
Alternative Tree Protective Fencing 25
Figure 3 26
Ground Protection 26
Figure 4 27
Example of all-weather warning signs to be affixed to fencing at 10m intervals. 27
Figure 5 Arboricultural Consultant Site Visit 28

5. Qualifications 30

Bibliography 31

© 2021 Fallen&Found Arboriculture Ltd

All rights to the contents of this report are reserved. No part of it may be reproduced, transmitted, or changed in any form including electronic, photocopying or recording. This report and its contents shall not be stored in any retrieval system of any nature without the written permission of the author (Oliver Lower). This report, its contents, and format are for the sole use of Helyer-Davies Architects Ltd for the purpose of dealing with the specified site. The report may not be divulged, lent, hired or sold to a third party not directly involved in the specified site without the written consent of the author. The report may be copied and reproduced as part of the normal planning process associated with the site.

The statements made in this report do not take account of extreme weather events, rooting environment alterations, accidental damage, vandalism or works not carried out to industry recognised standards or best practice. Fallen&Found Arboriculture Ltd does not accept any liability associated with these instances. The validity of this report ceases after two years from the instance of the initial site inspection, or if the site conditions change as a result of unspecified works affecting the subject tree/s.

Quality Control			
Author	**Oliver Lower**	**Checked by**	**Stephanie Smith** (19/03/2021)

1. Introduction

1.1. Instruction

1.1.1. I have been instructed by you **Mr Martin Helyer** on behalf of (**Helyer-Davies Architects Ltd**), to undertake an **Arboricultural Impact Assessment** (**AIA**) of a proposed development located at **52 Bath Rd, Emsworth, Hampshire PO10 7ES.** This assessment will examine the relationship between the proposal and the tree population growing at and within an influencing distance of the site. I have also been instructed to create a **Tree Protection Plan** (**TPP**). The purpose of this plan is to provide an accurate visual representation of the juxtaposition between the proposal and the retained tree population, as well as detailing the locations of tree protection to be adopted for the site.

1.1.2. I have also been instructed by you to create a **Preliminary Arboricultural Method Statement** (**AMS**) for the proposed development. The purpose of this document is to outline the principal methodologies required to guide the proposal through development in a sensitive, conscientious and arboriculturally acceptable manner.

1.2. Scope

1.2.1. All of my tree observations are of a preliminary nature, with the tree survey being carried out from ground level without any investigations using invasive or diagnostic equipment. I have not checked the accuracy of the positions of the trees and I have estimated all dimensions unless otherwise stated.

1.2.2. This report is only associated with the arboricultural aspects of the site and does not relate to ecological or archaeological matters which may be present. This report and the assessments and methods prescribed or discussed within it have been constructed in accordance with **British Standards (BS) 5837:2012 "*Trees in relation to design, demolition, and construction – Recommendations.*"**

1.2.3. A full hazard assessment of the trees[1] has not been undertaken during this survey and it is considered to be beyond the scope of this report. Any obvious defects have been identified and included along with any pertinent recommendations relating to the remediation of tree-related risk are included in the BS 5837:2012 compliant tree survey schedule. The assessments contained within this report and all associated plans will be based upon the plans and information which have been provided to me by you.

[1] Including an assessment of internal decay or its significance

1.3. Document disclosure

1.3.1. You have supplied me with the following documents:

4MM1 52 Bath Rd (PS) - Topo	08/03/2021 10:11
4MM1 52 Bath Rd (PS).dwg	08/03/2021 10:11
4MM1 52 Bath Rd (PS).dxf	08/03/2021 10:12
4MM1 52 Bath Rd (PS)-Meas Build & Elevs	08/03/2021 10:11
52 Bath rd Working.bak	08/03/2021 10:15
52 Bath Road - B Reg-001-Existing	08/03/2021 10:11
52 Bath Road - B Reg-002 -Proposed	08/03/2021 10:11
52 Bath Road - B Reg-003 Ground Floor	08/03/2021 10:11
Arb 52 Bath Rd V1.dwg	12/03/2021 09:36
Arb 52 Bath Rd V1.dxf	12/03/2021 09:35
tree diagram	19/03/2021 16:24
tree markup.dwg	19/03/2021 16:25
tree markup.dxf	19/03/2021 16:25
Working V1.bak	12/03/2021 11:20

1.4. Land Survey

1.4.1. I have been provided with a CAD-based topographical land survey plan which details the locations of trees, foliage and relevant significant site details. This report and its associated plans have been written and constructed on the premise that this land survey is accurate. However, I cannot accept any responsibility for the accuracy of this information.

1.4.2. The assessments made in this document are based on the information and plans provided by you on the **13th** of **March 2021**. The conclusions, recommendations, and discussions presented in this report have been made using the BS 5837:2012; compliant tree survey conducted by myself on the **8th March 2021.** The plans I have prepared are constructed in a preliminary format which may be amended where appropriate during the design process.

1.5. Ecological constraints

1.5.1. Any works on or around any of the trees or hedges contained within or located outside of the site should bear in mind The Wildlife & Countryside Act 1981 as amended the Countryside and Rights of Way Act 2000. All wild birds are protected by the Wildlife and Countryside Act - 1981, Conservation - Natural Habitats -Regulations 1994 and Countryside Rights of Way Act – 2000. This makes it an offence to intentionally kill, injure, take, possess or trade-in any wild animal listed and prohibits interference with places used for shelter or protection, or intentionally disturbing animals occupying such places. The Bird Breeding season extends from the 1st of March to the 31st of July, as a result, all disturbing activities should be avoided during these times.

1.5.2. All species of Bat and their breeding sites or resting places (roosts) are protected under Regulation 41 of The Conservation of Habitats and Species Regulations 2010 and Section 9 of the Wildlife and Countryside Act 1981. It is an offence for anyone intentionally to kill, injure or handle a Bat, to possess a Bat (whether live or dead), disturb a roosting Bat, or sell or offer a Bat for sale without a licence. It is also an offence to damage, destroy or obstruct access to any place used by Bats for shelter, whether they are present or not.

1.5.3. These issues are outside of my area of experience and separate advice from a suitably qualified ecologist should be sought in the instance that any of these constraints apply to this site.

1.6. Qualifications and experience

1.6.1. The conclusions and recommendations contained in this report are formed from my own site observation and the provided information. The opinions expressed within it are based on my arboricultural experience. My qualifications and experience in arboriculture are included in **Section 5** at the end of this document.

2. Site and proposal

2.1. Site visit

2.1.1. I undertook a site visit on the morning of **8th March 2021**. The purpose of this visit was to conduct a ground-level visual tree assessment survey, recording data and assessing the condition of the tree population within the immediate vicinity of the site. Appropriate tree categorisations were applied to each tree and suitable vegetation during this visit. The weather during the visit was overcast with light and gentle rain. Overall the weather did not pose a significant constraint on the surveying process and most parts of the trees above-ground structures were visible during the survey.

2.2. Site location

2.2.1. The survey site is located adjacent to Bath Rd within the town of Emsworth. The property and survey site are located in close proximity to Westview Flat and a short distance from Emsworth Sailing Club.

Conditions	Result
Temperature	12°C
Cloud Cover	0%
Precipitation	0%
Humidity	50%
Wind Speed (Beaufort)	F2

Red line is indicative of site boundaries

2.3. Site description

The site comprises of a 2 storey dwelling residing within a 0.41-acre plot. Access to the property is gained via a gravel driveway which leads a short distance from Bath rd in a westerly direction. The front garden is surrounded to the east and south by hedging and several tree species are growing adjacent to the garden boundaries. The rear garden can be reached via a small, gated entrance to the north of the main house or via a small gated entranceway to the south of the main garden. The rear garden comprises of a large lawn area that contains several informal herbaceous beds. Two large Weeping Willow[2] trees are growing on the gardens southernmost boundary and numerous small trees are planted throughout the remainder of the garden. The topography of the site is level and ground conditions remained firm across the site during the survey.

2.4. Proposed development

2.4.1. The proposal is for the demolition of a small conservatory, lean-to pergola and the construction of a single storey extension with the addition of a garden gazebo.

[2] *Salix chrysocoma*

3. Arboricultural Impact Assessment

3.1. Introduction

3.1.1. The purpose of this assessment is to examine the relationship between the proposal and its likely impact on the retained tree population, both at and within an influencing distance of the site. This assessment will also determine whether the proposed works can be conducted without adversely affecting the retained trees in the short and long term. Recommendations and mitigation will be suggested to reduce or remove the potential impact on the retained tree population and assist in the implementation of the proposal in the most arboriculturally acceptable manner.

This assessment will address the following items:

- **Potential damage arising from mechanical activities such as excavations and demolition.**
- **The installation of services and any trenching required facilitating this.**
- **Future tree growth**
- **Shading**
- **Potential future pressure on the retained tree population.**
- **Health, safety and seasonal nuisance.**

3.2. Tree retention/removal and pruning

3.2.1. All trees to be retained are set out in **Table 1** below. Any trees, hedges and groups required to be removed to facilitate the proposal are set out in **Table 2.** Any tree, group and hedgerow required to be pruned to facilitate the proposal are set out in **Table 3**.

Trees, groups and hedgerows to be retained.

Table 1 – Vegetation to be retained	Category A	Category B	Category C	Category U
Tree No's	N/A	T1 T3	T2 T4 T6 T7 T8 T9 H1 H2 G1 G2	N/A

Trees, groups and hedgerows to be removed.

Table 2 – Vegetation to be removed	Category A	Category B	Category C	Category U
Tree No's	N/A	N/A	N/A	N/A

Trees, groups and hedgerows to be pruned.

Table 3 – Vegetation to be Pruned/Part removed	Category A	Category B	Category C	Category U
Tree No's	N/A	N/A	T9	N/A

3.2.2. No high-quality (Category-A) trees have been identified as growing at or within an influenceable distance of the proposal.

3.2.3. Two moderate-quality (Category B) trees have been identified as growing at or within an influenceable distance of the proposal. All trees with this categorisation are to be retained and protected throughout the development process.

3.2.4. Ten low-quality (Category-C) trees and tree groups have been identified as growing at or within an influencing distance of the survey site and proposed development. Category-C trees are those which are considered to be worthy of only limited arboricultural merit and amenity value due to several factors. These factors include advanced age, the presence of significant biomechanical defects, low-vitality or young trees with a stem diameter less than 150mm. Category-C trees should not be considered for retention where they place a significant constraint on the design and development process. A single low-quality (Category-C) tree has been recommended for pruning (**T9**). The low canopy of the tree is to be sympathetically raised using ***"BS 3998:2010 Tree Work – Recommendations"*** compliant methods. These works have been prescribed to safeguard the tree's canopy throughout the demolition/development process.

3.2.5. No unretainable (Category-U) trees and tree groups have been identified by the tree survey. All unretainable category trees have significant irremediable structural defects, are in an advanced state of decline or are colonised by known tree pathogens. As a matter of course, Category-U trees should not be a material consideration in the planning process. Category-U trees are shown in red on the accompanying plans found in the appendices of this document.

3.2.6. The proposal does not require the removal of any trees which currently inhabit the site. Minor pruning works have been recommended for the canopy of a single tree growing at the site. These works have been recommended to safeguard the tree during the demolition/development process. The prescribed tree works are minor in nature and will not detract from the tree's amenity/aesthetic value, neither do I perceive the works to lead to any long term detriment to the subject tree.

3.2.7. Supplementary planting may be employed to mitigate initial tree losses or pruning. A range of native, non-native and ornamental tree species ranging from standard to heavy standard may be planted within the site. Carefully considered supplementary planting will improve overall amenity, aid in the formation of a diverse tree population with a mixed demographic with greater resilience in light of perceived climate change. Any supplemental trees should be planted in strict accordance with ***BS 8545:2014 Trees: from nursery to independence in the landscape–Recommendations*** by fully qualified and experienced landscape or arboricultural contractors.

3.2.8. Details on prescribed tree works along with the dimensions of each tree included within the project may be found in the **Tree Survey Schedule**[3] contained within the appendices of this report.

[3] Appendix A

3.3. Additional implications arising from the development

3.3.1. Construction within the RPA

3.3.1.1. Damage to the rooting system of a tree can have a significant detrimental effect on a trees biological function. Processes such as mechanical excavations and resultant compaction can lead to loss of root system, anaerobic soil conditions and tree instability. The vast majority of a tree's roots proliferate within the first 600mm of soil. The majority of a tree's major roots are within the first 3m of the trees stem base, after this point, the tree root system is heavily branching and of a significantly smaller diameter.

3.3.1.2. No construction is required to take place within or close to any of the retained trees theoretical tree root protection areas. In my professional opinion, I perceive there to be a low risk of long-term detriment to the trees brought about by the development.

3.3.1.3. BS5837 compliant tree protective fencing will be erected prior to the commencement of the project. The fencing will be used to define a Construction Exclusion Zone separating the site's trees from any potentially damaging activities throughout the development process.

3.3.2. Movement of construction machinery and staff parking

3.3.2.1. The property driveway and existing gravel surface will provide sufficient access and appropriate ground protection within the front garden during the development. Access to the rear garden shall be conducted through the small access gate located a short distance to the south of the front garden entrance. Ingress and egress from this access point will require supplementary ground protection to be installed. As long as these protective measures are in situ prior to the commencement of works and delivery of materials to the site, I perceive there to be a low potential for long-term detrimental effects occurring to the retained tree population resulting from the movement of construction machinery at the site.

3.3.2.2. The property driveway surface will provide sufficient access and appropriate ground protection during the development. The property driveway and current parking spaces will provide sufficient parking for contractors and sub-contractors. Provision for staff parking should be provided by the site supervisor and contractor method statement. I perceive there to be a low potential for long-term detrimental effects occurring to the retained tree population resulting from the movement of construction machinery at the site.

3.4. Tree protection

3.4.1. The methods of demolition and construction may potentially have a detrimental impact on the biological function of the retained tree stock. With this in mind, thorough tree protective measures are required to provide adequate protection to the trees and to avoid potentially harmful incidents. In order to fully comply with **BS 5837:2012 Trees in relation to design, demolition and construction – Recommendations** and to ensure that the retained tree stock is afforded the highest level of protection throughout the development process, appropriate Tree Protective Fencing is required to be installed in the locations identified in the Tree Protection Plan[4]. The locations of the Tree Protective Fencing are used to define a Construction Exclusion Zone (CEZ). This area is indicated as a blue-lined area on the accompanying Tree Protection Plan. Under no circumstances is any form of construction activity to take place within this area.

[4] Q0109\BathRd\TPP_V1

3.4.2. The tree protective fencing to be installed in the proximity of **T9** has been set back to provide space for access during the construction of the proposal. This set back is to incorporate temporary ground protection consisting of marine ply sheets or precast resin ground protective mats overlaid onto a 150mm thick layer of woodchip. The location of the temporary ground protection can be viewed on the Tree Protection Plan[5] as a solid yellow area. The temporary ground protection is to be pinned in place using ground pins to ensure they remain intact during the entire course of the demolition\construction for the proposal. This form of temporary ground protection is only appropriate for use by pedestrians and pedestrian operated plant not exceeding 2 ton in weight. A pre-commencement meeting and regular site monitoring will ensure that the prescribed tree protective measures have been installed and will remain in situ in an undamaged functional condition throughout the construction process.

3.4.3. As long as the prescribed protection methods are correctly installed prior to the commencement of works, I perceive there to be a low risk of long-term detriment to the retained tree population arising from the proposed development. Further details regarding the tree protection measures prescribed for the site can be found in the **Preliminary Arboricultural Method Statement** section of this report.

3.5. Ground-level changes

3.5.1. Grade changes often occur during construction. Changes to soil heights have the potential to cause significant disturbance to tree roots and may damage their relationship with surrounding soil horizons. Lowering soil heights may lead to root severance and compaction both of which may have severe impacts on a tree's biological function. Increases in soil levels may cause anaerobic soil conditions which impede water permeation and restrict gaseous exchange. This may cause root death and stress to those trees affected.

3.5.2. The overall topography of the site is level and no significant ground-level changes are proposed for the site. As a result, I do not perceive there to be a constraint arising from ground level changes and the proposal.

3.6. Services

3.6.1. No new services are proposed to be installed within the RPA's of the retained trees growing at the site. Consequently, I do not perceive there to be a constraint on the proposal associated with services.

3.7. The proximity of existing trees to proposed structures

3.7.1. Direct and indirect impacts of trees

3.7.1.1. Roots do not have the ability to directly damage heavily loaded structures, however, lightly loaded structures such as paths, small garden walls, and driveway surfaces may be disrupted by incremental root growth. I assume that the proposal will be designed and constructed with trees and potential future root growth in mind[6]. I have assessed the location, layout and composition of the proposal in light of the retained tree population. I consider the juxtaposition between the proposal and the retained trees to maintain appropriate separation. I do not anticipate any potential negative impacts arising from the proposal and its proximity to the retained tree population.

[5] Q0109\BathRd\TPP_V1
[6] NHBC Part 4 Foundations, Chapter 4.2 Buildings near trees.

3.7.2. Seasonal nuisance

3.7.2.1. The proposal provides adequate separation from the sites tree population. I do not consider seasonal nuisance arising from leaf fall to be a constraint on the proposal. However, gutter guards and low maintenance gutter systems may be adopted to mitigate any future issues associated with leaf fall at the site. Consequently, I do not consider seasonal nuisance arising from leaf fall to be a constraint on the proposal.

3.7.3. Future pressure to prune or fell

3.7.3.1. There is little evidence to suggest that large numbers of trees are being lost through future pressure to fell or prune from property owners. Trees provide numerous benefits to occupied areas, most of which far outweigh the presumed disadvantages associated with them. In this instance, the juxtaposition between the proposed development and the retained trees takes into consideration the tree constraints and should not lead to future pressure to fell or prune any of the retained trees. As a result, any future tree pruning works are unlikely to be in excess of what would be considered general maintenance.

3.7.4. Shading, orientation and windows

3.7.4.1. The juxtaposition of the retained tree population, the proposal and the existing main house will not change significantly as a result of the proposal. Consequently, I do not perceive excessive shading to be a constraint on the proposal.

3.8. Conclusion

3.8.1. The proposed development and associated works do not require the removal of any of the site's existing tree population. Minor tree pruning has been recommended to safeguard the canopy of a single tree growing at the site. I do not perceive this minor pruning associated with the formation of the proposal to detract from the tree character and amenity of the site nor the surrounding environment.

3.8.2. The juxtaposition between the proposal and the retained tree population maintains appropriate separation. I have assessed the probability of future tree root growth and seasonal nuisance. In my professional opinion do not perceive these to be a constraint on the proposal.

3.8.3. Robust tree protective measures have been prescribed to provide protection to the retained tree population throughout the development process. As long as these measures are installed prior to all material deliveries and construction activities and that Arboricultural Supervision is adopted during all potentially harmful activities, I perceive there to be little scope for long-term detriment to the retained tree population arising from the development.

3.8.4. Considering the points discussed in this assessment, I perceive there to be no significant arboricultural constraints associated with the proposal.

07564346560
Oliver@fallenandfound.co.uk
www.fallenandfound.co.uk

2
Selsdon Avenue
Romsey
Hampshire
SO51 7PL

Fallen&Found Arboriculture Ltd

Company No: 11872391 / VAT Registration 317617696

Preliminary Arboricultural Method Statement

52 Bath Rd, Emsworth, Hampshire PO10 7ES.

Dated

19th March 2021

To be displayed prominently on-site and brought to the attention of all employees, contractors and sub-contractors

This document is to be used in conjunction with the following documents:

- **BS 5837:2012 Tree Survey Schedule**
- **Tree Protection Plan ref: Q0109\52BathRd\TPP_V1**

Note:
After approval from the Local Planning Authority, this Arboricultural Method Statement becomes an official document. Consequently, the methodologies prescribed within it must be conducted as stated and carried out to their fullest extent as described. A copy must be retained by the Site Supervisor for reference and made available at all times for employees, staff and sub-contractors.

1. Summary

The purpose of this method statement is to safeguard retained trees and their below and above ground structures. The recommendations made in this report aim to guide the construction process in areas near to, or within the root protection areas of retained trees. The second purpose of this method statement is to minimise the impact of construction activity on the tree population retained on site. The excavations made for the construction of foundations on any site where trees are present may lead to the damage and removal of roots. Any form of damage or root loss should be avoided where possible. Where the likelihood of this is high, a methodology of construction that minimises the impact of root damage/loss is required to be followed.

This Arboricultural Method Statement has been constructed in accordance with **BS 5837:2012 "Trees in relation to design, demolition and construction – Recommendations."** Further guidance has been taken from the following documents:

- **BS 3998:2010 "Tree Work – Recommendations."**
- **National Joint Utilities Group "Guidelines for the planning, installation and maintenance of utility services in proximity to trees, 1995."**
- **Trees in Hard Landscapes: A Guide for Delivery.**
- **Trees in Focus, APN12, Through Trees to Development**
- **BS 8545:2014 Trees: from nursery to independence in the landscape-Recommendations.**

2. Site-specific considerations

All construction activity must be excluded from the root protection areas of the retained trees. Unless specified in detail within this document. The root protection area of each retained tree is outlined as a **Grey Hatched** dodecagon as indicated on the accompanying plans. A **Construction Exclusion Zone** (CEZ) marked as a blue striped area has been defined and displayed on the accompanying **Tree Protection Plan**. No form of activity is to take place within this zone during the demolition or construction phases of the proposal.

All agreed tree works and tree protective measures must be constructed and in situ prior to the commencement of the development process including the delivery of materials to the site. Full details regarding the extent of each tree root protection area can be found in the **Tree Survey Schedule** section provided in **Appendix A** of this document. Details regarding the prescribed tree works may also be found in the same section. Initial access to the site can be achieved via the pre-existing access driveway and access gate. No heavy machinery including dumpers, excavators or tracked vehicles is to enter the site during the tree works phase. Arisings can be removed from the site by hand and with wheeled vehicles. These vehicles must not operate within the root protection areas of the retained trees.

3. Sequencing, monitoring, and supervision

In order to ensure that the tree protection measures and methodologies prescribed by this method statement are conformed to, it is my recommendation that a series of monitoring intervals and regular site visits be established. All works which have the potential to harm trees may require arboricultural supervision. Regular site visits will be recorded by the Arboricultural Consultant, a copy of the site inspection form can be found in **Appendix C, Figure 4**. Recorded site visits will be attached to the AMS and remain available for inspection during the construction process.

In my opinion, the following events listed below require arboricultural supervision:

Event	Supervision	Reason
Pre-commencement meeting	Arboricultural Consultant, Contractor, Client and LPA representative	To agree on tree works, protective measures and any other site constraints
Installation of temporary ground protection	Arboricultural Consultant and Contractor	To ensure correct instalment in prescribed locations. To sign off work and inform LPA.
Erection and installation of Tree Protection Fencing (CEZ[7])	Arboricultural Consultant and Contractor	To ensure correct instalment in prescribed locations. To sign off work and inform LPA.

3.1. Auditing and inspection regime

An inspection regime or schedule of monitoring should be agreed upon during the pre-commencement meeting between the Arboricultural Consultant, LPA Representative, Contractor and Client. A detailed record of site visits and monitoring during sensitive site operations shall be collated using the **Arboricultural Consultant Site Visit Form** included in **Appendix C, Figure 5**. The AC site visit form will be used to inform the LPA after every site visit and throughout the development.

4. Sequenced methods of construction and tree protection

4.1. Pre-commencement meeting

Arboricultural supervision required

An onsite meeting will be held, attendees will include all relevant parties. Parties should include the appointed Arboricultural Consultant, the developer and local planning authority representative. The purpose of the site meeting is to agree on the formalities of the proposal, agree on tree works, the location of access both permanent and temporary, site storage locations, the location of tree protection barriers, time schedules and any other arboricultural constraints the site may pose.

[7] Construction exclusion zone

4.2. Conduct agreed on tree works

A detailed schedule of the prescribed tree works associated with the site can be found in the accompanying **Tree Survey Schedule, Appendix A**. All tree works should be conducted by a fully qualified and insured arboricultural contractor conforming to **BS 3998: 2010 "Tree Work – Recommendations**." The contractor should prepare and fill out all necessary Site-Specific Risk Assessments and Method Statements appropriate for the task/tasks and adhere to current health and safety standards. A list of Arboricultural Association approved contractors can be found on their website www.trees.org.uk.

All contractors should implement appropriate Biosecurity measures. The Arboricultural Associations, Application of Biosecurity in Arboriculture, Guidance Note 2[8] provides guidance on the responsibilities of Tree Work Contractors. All arisings should be processed and removed from the site. All removed arisings should be disposed of in an environmentally sensitive manner.

The locations and individual identification numbers for each tree included within the tree survey conducted at the site can be found in the **Tree Survey Schedule** contained within **Appendix A** of this document. A copy of the tree survey schedule and **Tree Protection Plan (Q0109\52BathRd\TPP_V1)** should be provided to the appointed Tree Contractor by the Site Supervisor. **At no point may any part of a retained tree be cut or pruned by staff, contractors or sub-contractors.**

4.3. Erect tree protection barriers and temporary ground protection

Arboricultural supervision required

Tree protective measures must be installed prior to:

- Site and ground clearance
- The delivery of materials and plant to the site.
- Grading of soil heights
- Demolition of existing structures or the removal of hard surfacing.
- Construction in any form.
- The installation of services or drainage.
- Landscaping works.

4.3.1. Form

Tree protection barriers are to be erected in the locations specified in the **Tree Protection Plan** (**Q0109\52BathRd\TPP_V1**) provided in **Appendix B** of this document. The protection barriers will conform to the guidelines set in **BS 5837:2012 "Trees in relation to design, demolition and construction – Recommendations.** The tree protective barrier fences will consist of weld mesh panels affixed to a braced vertical and horizontal scaffold framework as indicated in **Appendix C, (Figure 1**) of this document. A supplementary layer of netting should be attached to the outside of the tree protective barriers to inhibit spoil or other material passing through the weld mesh panels and into the protected rooting zones of the trees. All-weather warning signs such as those in **Appendix C, (Figure 4)** are to be placed upon the fencing every 10m. The purpose of these signs is to inform staff and contractors as to the purpose of the tree protective barriers.

[8] https://www.trees.org.uk/Help-Advice/Biosecurity

Due to the minor scope of development associated with the proposal and inherent cost of the default tree protective fence recommended by **BS 5837:2012 "Trees in relation to design, demolition and construction – Recommendations,** it is my recommendation to downgrade this to the alternative Tree Protective Fence found in **Appendix C, (Figure 2)**. The installation of this form of fencing negates the requirement for excavation associated with its installation.

Temporary ground protection shall be installed in the locations specified in the accompanying **Tree Protection Plan** in the areas indicated (solid Orange). A layer of geotextile will be first laid onto the existing ground surface and pegged in place using small pins. A 150mm deep layer of woodchip will be spread evenly over the geotextile material by hand using wheelbarrows and a rake. On to the woodchip layer, a series of interlinked pre-cast resin boards or 20mm thick ply boards shall be joined together and affixed to the ground using steel pins. An example diagram and photographs of the installed ground protection is provided in **Appendix C** (**Figure 3**). The purpose of the ground protection is to provide safe passage of construction traffic across the Root Protection Areas of the trees without distorting or causing compaction of the underlying soil horizons. This form of ground protection is **only** suitable for the following instances: *"for pedestrian operated plant up to a gross weight of 2t".*

4.3.2. Location

The locations of the tree protective barriers and temporary ground protection are indicated on the accompanying **Tree Protection Plan** (**Q0109\52BathRd\TPP_V1**) provided in **Appendix B** of this document. The locations of tree protective measures should be assessed in light of potential underground services. I have made no assessment of potential underground services in the proximity of the prescribed tree protective measures. The presence of underground utilities should be ascertained by the contractor prior to the installation of the tree protective measures.

In the instance that underground services are present in the locations where the tree protective measures have been prescribed the alternative Tree Protective Fence specification found in **Appendix C, Figure 2** should be used. The alternative Tree Protective Fencing should be incorporated into the default fencing and secured at either end. In certain circumstances, it may be appropriate to incorporate site boundary fences, hoarding or temporary site offices. This must be confirmed with the LPA and be installed/removed without causing damage to the retained trees.

4.3.3. Setting out

The setting out of tree protective fencing and temporary ground protection should be conducted by the contractor and Arboricultural Consultant. Its position is to be demarked using biodegradable marker paint according to the dimensions specified in the tree survey schedule. Erection of all tree protective measures will take place prior to any works other than the prescribed tree works occurring. This includes demolition and delivery of materials, plant or equipment. Once erected, all tree protective measures are to be treated as **Sacrosanct** and under **NO** circumstances moved without consulting the Arboricultural Consultant and the notification of the Local Planning Authority. Any alteration to any form of tree protective measures utilised at the site throughout the entire development process will first require the written permission of the LPA.

4.3.4. LPA Involvement

The Local Planning Authority should be informed by the appointed Arboricultural Consultant of installation and construction of the tree protective barriers once they are in situ and prior to the commencement of any development activities at the site.

4.3.5. Construction Exclusion Zone

The final location of the tree protective barriers will be used to define a **Construction Exclusion Zone.** The **Construction Exclusion Zone** is identified as a blue striped area in the accompanying **Tree Protection Plan** (**Q0109\52BathRd\TPP_V1**) provided in **Appendix B** of this document. The purpose of this zone is to ensure that the protected trees and their rooting zones remain undamaged throughout the development process. The tree protective measures prescribed within this report and detailed in the accompanying **Tree Protection Plan** must be installed and remain in situ until all construction activity at the site is complete. This includes all landscaping and associated operations.

4.3.6. Prohibitions

The following activities must ***NOT*** be allowed to occur inside of the **Construction Exclusion Zone**:

- ***The raising or lowering of soil levels***
- ***The positioning of machinery of any size,*** unless temporary ground protection has been installed, approved and recommended within this Arboricultural Method Statement or previously agreed by the appointed Arboricultural Consultant and LPA.
- ***Mechanical excavations of any kind***
- ***Excavations conducted by hand*** (unless specifically approved within this Arboricultural Method Statement).
- ***The construction of foundations*** (unless specifically approved within this Arboricultural Method Statement).
- ***Excavations for the installation of services including drainage or conduits*** (unless specifically approved within this Arboricultural Method Statement).
- ***The storage of plant, machinery or tools*** unless temporary ground protection has been installed.
- ***The storage of spoil*** unless temporary ground protection has been installed.
- ***Vehicular access*** unless temporary ground protection has been installed.
- ***The mixing of materials, spillage or discharge of chemicals or harmful substances.***
- **Fires** where unavoidable must be positioned outside of root protection areas and so that they cannot conduct heat on to the above-ground structures of the retained trees.
- **Signs, service cables or other items** will not be attached to any part of any tree being retained.

4.4. Staff parking, storage of materials and chemical mixing

Site parking for contractors, staff and visitors should be set out in the contractor's contingency plan. Any areas used for such purposes must be located outside of the root protection areas of the retained tree population or on a suitably protected ground. Provision should be made by the main contractor for dealing with vehicle spillages i.e. the use of spill response kits or protective bunding. All areas used for the storage of materials including cement, fuels, bitumen, paint, plaster, timber, machinery etc and any other hazardous materials are to be located a minimum distance of 10m from any tree root protection area at all times. A precautionary bund consisting of an earth bund lined with a heavy-duty plastic liner is sufficient to prevent contamination of RPA's and surrounding soil horizons.

4.5. Main construction process

The site manager will be responsible for informing all staff, contractors, sub-contractors and visitors as to the importance and locations of the retained trees located at the site.

A normal method of construction can be adopted across the site where there is no impingement on tree root protection areas. These areas have been plotted on the accompanying plans found in **Appendix B** of this document. The accompanying **Tree Survey Schedule** contains information on the dimensions of each tree's root protection area.

The site manager will instruct the appointed Arboricultural Consultant to attend site during any potentially arboriculturally sensitive events. The tree protective measures and locations of storage materials including areas used for the mixing of chemicals will be checked regularly regarding the site's general operation.

All tree protective measures including barriers and ground protection must remain in situ in an unaltered condition unless written approval has been provided by the LPA.

Where scaffolding is to be erected close to a retained tree(s) it must be conducted after the consultation of the appointed Arboricultural Consultant and installed as per his/her advice. Once in situ its construction and location shall be recorded photographically and used to inform the LPA where potential tree-related conflicts arise. As the location of scaffolding is not yet confirmed, this process of monitoring will reduce the potential for tree-related harm and maintain an informed relationship between the project and LPA.

Fires on the site will be avoided unless absolutely necessary. Where fires are unavoidable, they should be positioned where heat cannot conduct onto nearby trees and affect their foliage, rooting environment or structures. All fires should be attended at all times and extinguished before being left.

A 10m separation between any tree retained at the site during the mixing of cement. This 10m separation shall also be maintained between storage areas containing cement or other potentially harmful substances such as fuels, tar, oil, builders sand and cement washings.

Care should be taken when planning site operations in close proximity to trees. This includes the passage of machinery and the lifting of objects and materials. The appointed arboriculturist should be informed when potentially harmful operations are likely to occur during the construction process. A banks man should be employed to monitor excavations and ensure that mechanical damage does not occur to trees or protective barriers. In the instance that tree protective measures, including fencing and ground protection, are damaged at any point during construction activity, the Arboricultural Consultant must be informed immediately. Repairs to damaged tree protective measures must take place immediately under the supervision of the project Arboricultural Consultant.
At no point may any part of a retained tree be cut or pruned by staff, contractors or sub-contractors.

4.6. The dismantling of tree protective measures

Protective fencing and temporary ground protection will only be removed upon completion of all groundworks and prior to any final landscaping. The dismantling of fencing must be conducted by hand and in a conscientious manner taking care not to damage any of the retained trees. No machinery is to be used in the dismantling of the barriers and at no point may any form of machinery enter the root protection areas of the retained trees.

4.7. Soft landscaping and new planting

Before the start of construction, it is advisable to set aside areas where new planting is proposed. These areas can then be protected to ensure that the soil horizon into which the new planting is established is not compacted. Areas, where soil compaction has taken place but are proposed for replanting, will require soil amelioration prior to planting. Soil decompaction using soil displacement technology such as Airspading will be necessary to improve the rooting environment of new trees and shrubs prior to their planting.

The deep cultivation of soil within the tree root protection area must be avoided unless conducted carefully by hand. Machines such as rotavators are **NOT** to be used for the cultivation of soil in close proximity, or within tree root protection areas.

Herbicides used for the killing of unwanted herb layer should be appropriate for their intended use and applied by a fully qualified contractor taking special care not to spray or damage any of the retained trees. Dead vegetation should be removed carefully by hand without the use of machinery. No penetration of the soil below the unwanted vegetation may occur during this process.

New beds and areas of new planting should in principle be mulched using a 100mm deep well-composted organic woodchip mulch. This layer will reduce weed growth and retain moisture for new planting. Mulch layers should be topped up accordingly to maintain an effective thickness of 100mm at all times. No irrigation or drainage pipes are to be installed within the root protection areas of the retained trees.

New tree planting should be carried out in strict accordance with **BS 8545:2014 Trees: from nursery to independence in the landscape-Recommendations.** Appropriate support measure should be employed for all new trees at the site. This should also conform to the specification contained within **BS 8545:2014**. All new tree planting should be subject to a minimum of a two-year aftercare plan in order to ensure the successful establishment of new trees.

4.8. Amendments

Due to the nature of development issues sometimes arise which may require the amendment of previously agreed tree protection details or methods of working. In this instance, any alterations must be discussed with the appointed Arboricultural Consultant and approved in writing by the LPA prior to being implemented. Copies of amendments must be retained and attached to the site copy of the AMS as a definitive record of what has been agreed.

4.9. Communication details, monitoring & compliance

All relevant parties will be informed as to any amendments to the design or proceedings throughout the duration of the project.

Arboricultural Consultant: Oliver Lower | Fallen&Found Arboriculture Ltd
Tel: 07564346560
Email: oliver@fallenandfound.co.uk

An Arboricultural Consultant should be retained during the entire development process. Their roles will be as follows:

- Supervision by an Arboricultural Consultant is to take place during any excavation near to any retained trees or in proximity to existing RPA's.
- Weekly site inspection should take place and include monitoring of tree protection fencing, ground protection measures and Construction Exclusion Zones. Site visit times will be recorded using the form provided. **Appendix C, Figure 5.**
- Photograph the site and the protection methods employed in order to inform the LPA that works are being conducted in accordance with the methodology prescribe within this report.

Appendix A

Tree Survey Schedule

BS5837:2012 Tree Survey

Client: Helyer-Davies Architects Ltd
Project: 52 Bath Rd
Survey Date: 08/03/2021
Surveyor: Oliver Lower

Fallen&Found Arboriculture

Fallen&Found Arboriculture Ltd
2
Selsdon Avenue
Romsey
Hampshire
SO51 7PL
Phone: 01794 502101

Tree and Tag No / Species	Hght (m)	Stems No	Stems Ø (mm)	Crown Spread (m)	Crown Clear (m)	Age	RP A (m²) R (m)	Phys Condition	Structural Condition	Preliminary Recommendations / Survey Comment	Cat ERC
G1 N/A										Estimated Measurements	
A Group	3	1		N	1	M	A: 0	Fair	C: Fair		C.2
- -				E	1		R: 0		S: Fair	A shrub border containing various species of mixed quality.	10 to 20 yrs
				S	1				B: Fair		
				W	1						
G2 N/A										Estimated Measurements	
A Group	5	7	661 (Eq)	N	2	M	A: 197.9	Fair	C: Fair		C.2
- -				E	2		R: 7.93		S: Fair	A mixed regroup comprising of Alder, silver birch, Himalayan Birch and berberis shrubs.	10 to 20 yrs
				S	2				B: Fair		
				W	2						
H1 N/A											
A Group	2.5	1	80	N	1	SM	A: 2.9	Fair	C: Fair		C.2
- -				E	1		R: 0.96		S: Fair	A small beech hedge of limited merit.	10 to 20 yrs
				S	1				B: Fair		
				W	1						
H2 N/A										Estimated Measurements	
A Hedgerow	2.3	0		N	1	M	A: 0	Fair	C: Fair		C.2
- Spp.				E	1		R: 0		S: Fair	A small hedgerow providing screening to the front garden of the property.	10 to 20 yrs
				S	1				B: Fair		
				W	1						

Age Classifications: N Newly planted; EM Early Mature; Y Young; M Mature; SM Semi-mature; OM Over Mature

Condition: C Crown; S Stem; B Basal area

Stems: Ø Diameter; (Eq) Equivalent stem diameter using BS5837:2012 definition

ERC: Estimated Remaining Contributio

Tree and Tag No Species	Hght (m)	Stems No	Stems Ø (mm)	Crown Spread (m)	Crown Clear (m)	Age	RP A (m2) R (m)	Phys Condition	Structural Condition	Preliminary Recommendations Survey Comment	Cat ERC
T1 N/A										Estimated Measurements	
Common Oak *Quercus robur*	11.2	1	400	N 4 E 4 S 5.8 W 5	3	M	A: 72.4 R: 4.8	Fair	C: Fair S: Good B: Good	Tree located on adjacent property. No access gained for assessment.	**B.2** 20 to 40 yrs
T2 N/A											
Pittosporum *Pittosporum tenuifolium*	10	1	120	N 1.5 E 2.6 S 2.8 W 2.3	2	M	A: 6.5 R: 1.43	Fair	C: Fair S: Fair B: Fair	Include stem unions.	**C.2** 10 to 20 yrs
T3 N/A										Estimated Measurements	
Common Holly *Ilex aquifolium*	10	1	150	N 1 E 1 S 1 W 1		M	A: 10.2 R: 1.8	Fair	C: Fair S: Fair B: Fair	Tree located in adjacent property no access to assess tree.	**B.2** 20 to 40 yrs
T4 N/A										Estimated Measurements	
Saucer Magnolia *Magnolia soulangiana*	5	1	250	N 2 E 3.2 S 3.2 W 2.6	4 4 4	M	A: 28.3 R: 3	Fair	C: Good S: Fair B: Fair	Tree located in adjacent property no access to tree base.	**C.2** 10 to 20 yrs
T6 N/A											
Pissards Plum *Prunus atropurpurea*	3	1	150	N 1.25 E 1.94 S 1.74 W 1.57	2 2 2 2	M	A: 10.2 R: 1.8	Fair	C: Poor S: Fair B: Poor	Tree has poor form and low vitality.	**C.2** 10 to 20 yrs
T7 1188											
Weeping Willow *Salix chrysocoma*	12	1	810	N 4.42 E 7.36 S 6 W 5.21	2 2 2 1.5	M	A: 296.9 R: 9.72	Fair	C: Fair S: Fair B: Fair	Protection :: Erect protection barriers A large weeping willow which has been subject to numerous historical pollarding operations.	**C.2** 10 to 20 yrs

Age Classifications: N Newly planted; EM Early Mature; Y Young; M Mature; SM Semi-mature; OM Over Mature

Condition: C Crown; S Stem; B Basal area

Stems: Ø Diameter; (Eq) Equivalent stem diameter using BS5837:2012 definition

ERC: Estimated Remaining Contributio

Tree and Tag No Species	Hght (m)	Stems No	Stems Ø (mm)	Crown Spread (m)	Crown Clear (m)	Age	RP A (m²) R (m)	Phys Condition	Structural Condition	Preliminary Recommendations Survey Comment	Cat ERC
T8 N/A											
Silver Birch *Betula pendula*	10	1	220	N E S W	2 1 1 1	2 2 2 2	M	A: 21.9 R: 2.64	Fair	C: Poor S: Fair B: Fair	Tree has been topped in the past and has poor form.	**C.2** 10 to 20 yrs
T9 1187											
Weeping Willow *Salix chrysocoma*	9.3	1	770	N E S W	4.6 3.4 2 6.4	1.5 1.5 1.5 1.5	M	A: 268.3 R: 9.24	Fair	C: Fair S: Fair B: Fair	Protection :: Erect protection barriers *Erect temporary ground protection as described in AMS and displayed on accompanying Tree Protection Plan.* Raise low canopy :: To 5.0m *Raise northern canopy to 5m above ground level.* A large weeping willow which has been subject to numerous historical pollarding operations.	**C.2** 10 to 20 yrs

Age Classifications:					**Condition:**			**Stems:**		
	N	Newly planted	EM	Early Mature		C	Crown		Ø	Diameter
	Y	Young	M	Mature		S	Stem		(Eq)	Equivalent stem diameter using BS5837:2012 definition
	SM	Semi-mature	OM	Over Mature		B	Basal area	**ERC:**		Estimated Remaining Contributio

Appendix B

Tree Protection Plan (Q0109\52BathRd\TPP_V1)

Fallen&Found Arboriculture Ltd

2 Sesldon Avenue, Romsey, Hampshire, SO51 7PL

Tel: 01794 502101
Email: Info@fallenandfound.co.uk

52 Bath Rd
Tree Protection Plan

SCALE :	DATE :	
1 : 200 @ A2	19/03/2021	N
MAP FILENAME : Q0109\BathRd\TPP_V1		

Map data shown may contain Ordnance Survey ® products supplied by
Pear Technology Services Ltd; Email: info@peartechnology.co.uk
© Crown Copyright and database rights from date shown above
Ordnance Survey ® licence number 100023148

Crown Spread
Root Protection Area
Category 'A'
Category 'B'
Category 'C'
Category 'U'

0 25m

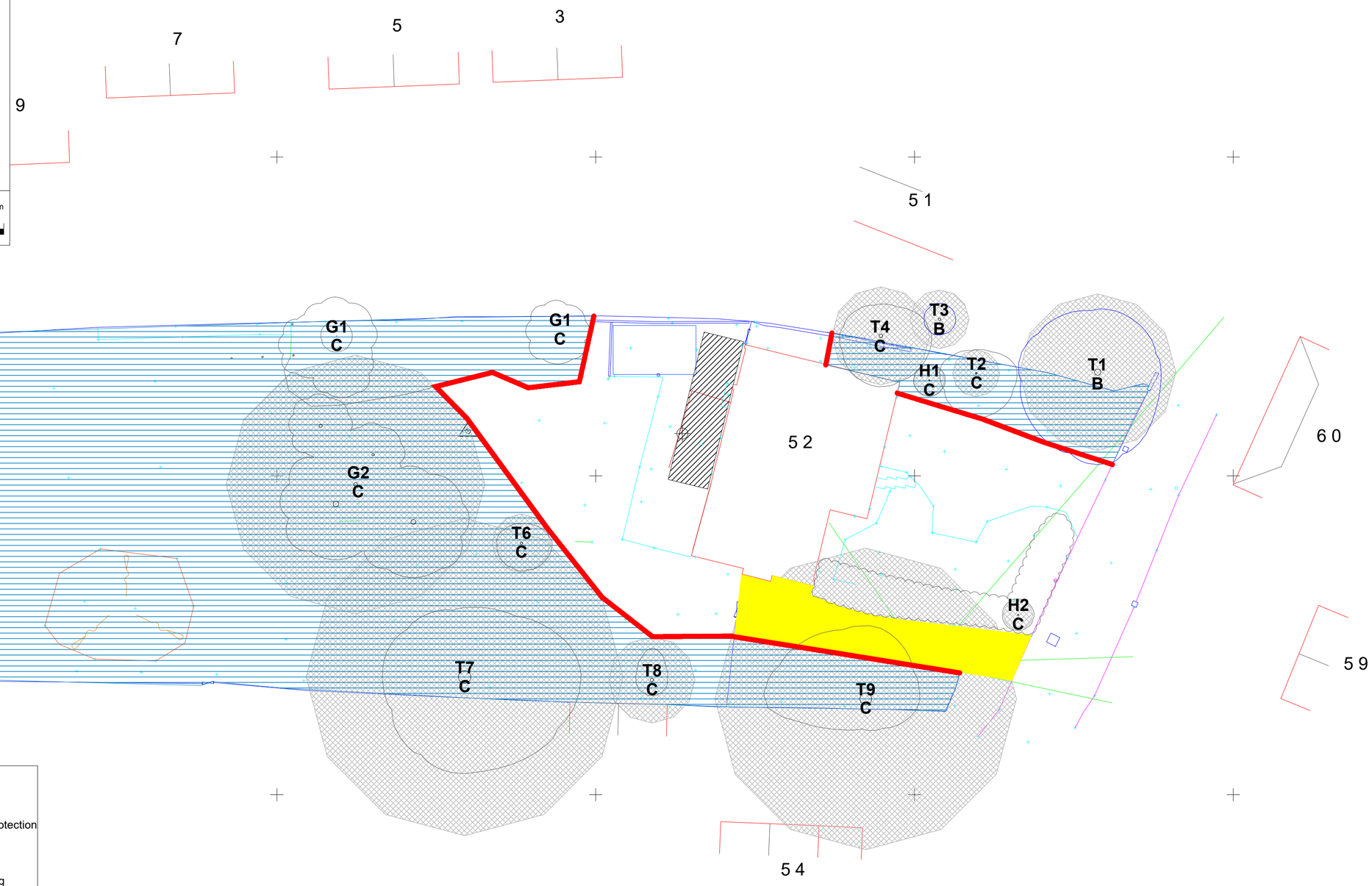

Legend

- Single Storey Extension
- Construction Exclusion Zone
- Proposed Gazebo
- Temporary Ground Protection
- Tree Protection fencing

Appendix C

Figure 1

Default Tree Protective Fencing

Protective fencing should be erected before any construction commences on site. It should also be in position to protect important trees prior to demolition.

Protective fencing should stay in position until all construction activity has finished.

'Barriers should be fit for the purpose of excluding construction activity and appropriate to the degree and proximity of work taking place around retained trees. On all sites, special attention should be paid to ensuring that barriers remain rigid and complete.' BS 5837 para 9.2.1.

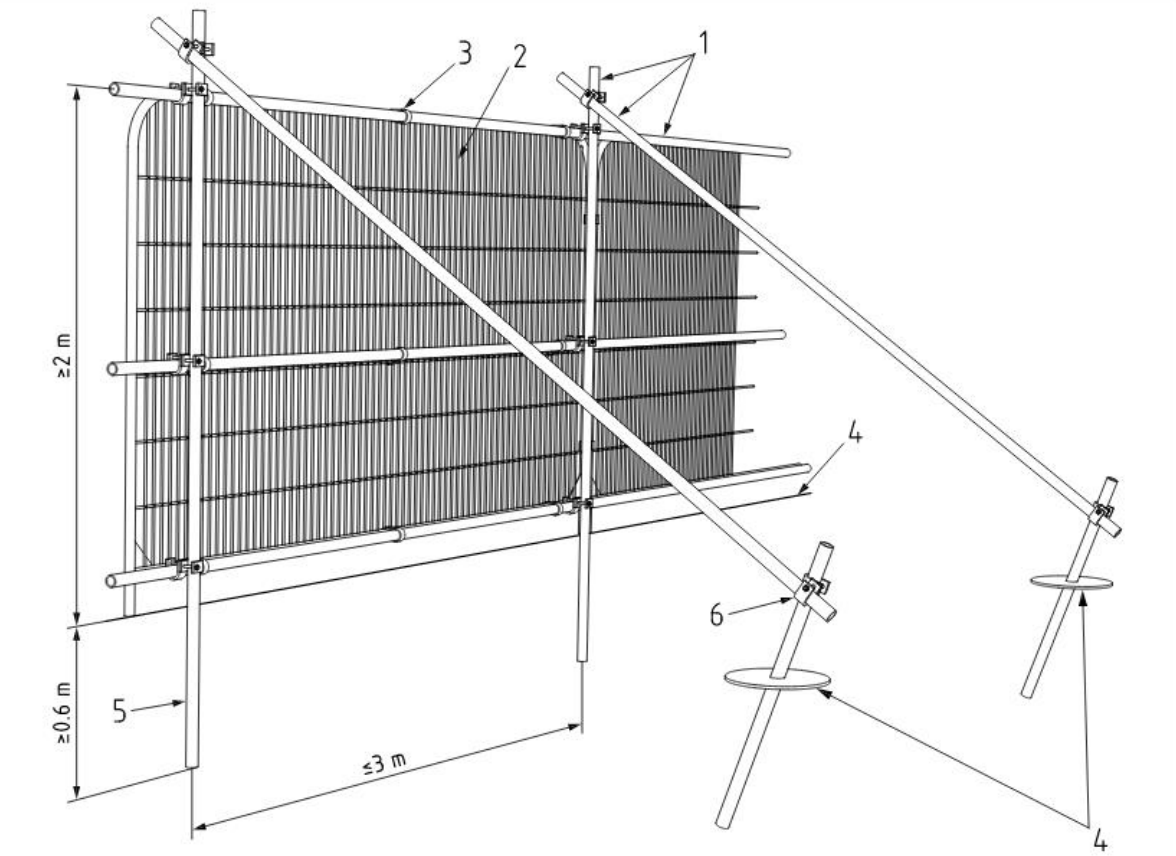

Key

1 Standard scaffold poles
2 Heavy gauge 2 m tall galvanized tube and welded mesh infill panels
3 Panels secured to uprights and cross-members with wire ties
4 Ground level
5 Uprights driven into the ground until secure (minimum depth 0.6 m)
6 Standard scaffold clamps

Figure 2

Alternative Tree Protective Fencing

This form of tree protective barrier should be used only when significant underground constraints warrant its use. However, it should be treated in the same manner as the default tree protective barrier displayed in **Figure 1.**

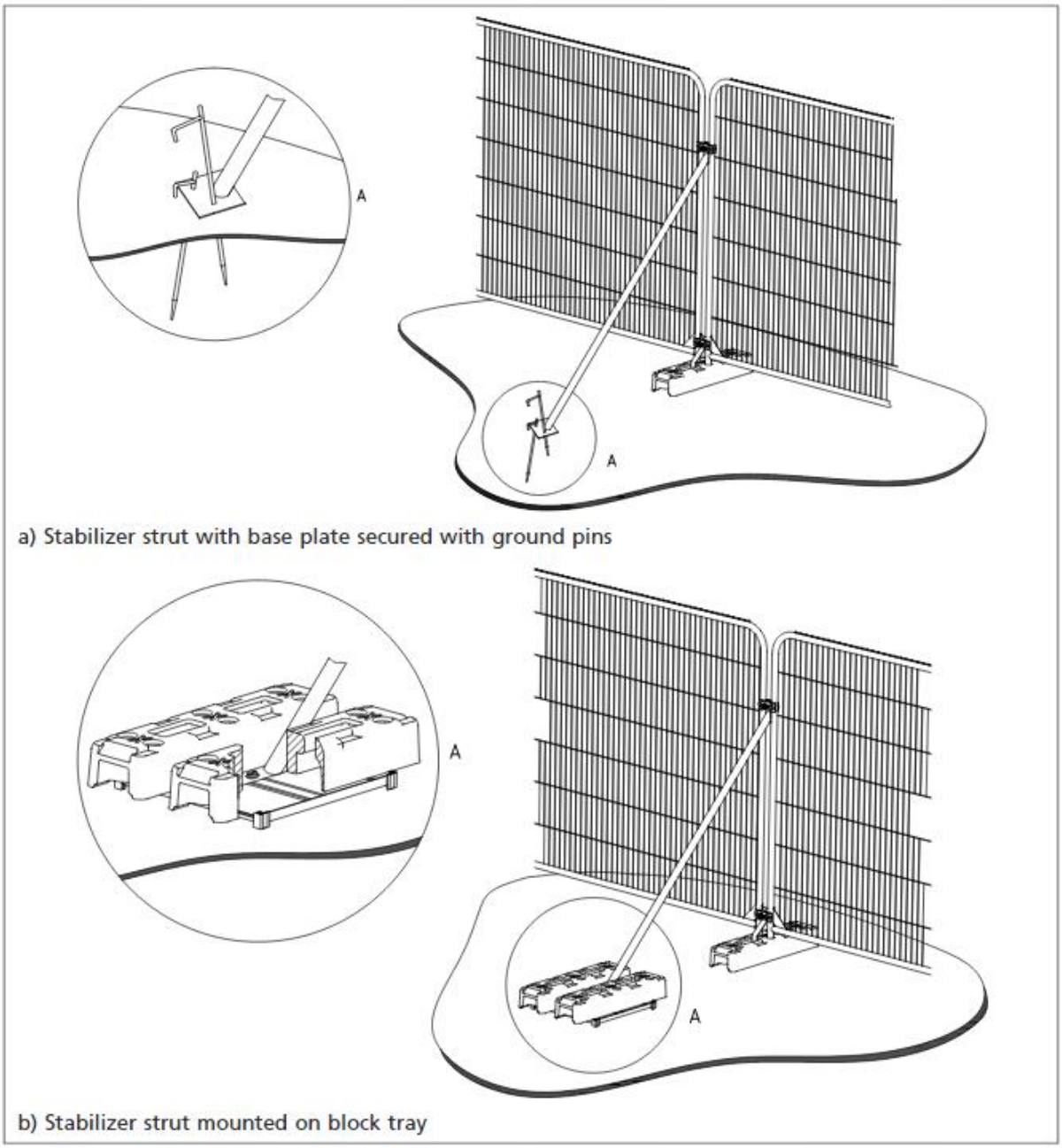

19/03/2021

Figure 3

Ground Protection

Sketch plan of set background protection affixed to the ground using pins suitable for machinery **NOT** exceeding 2 tonnes.

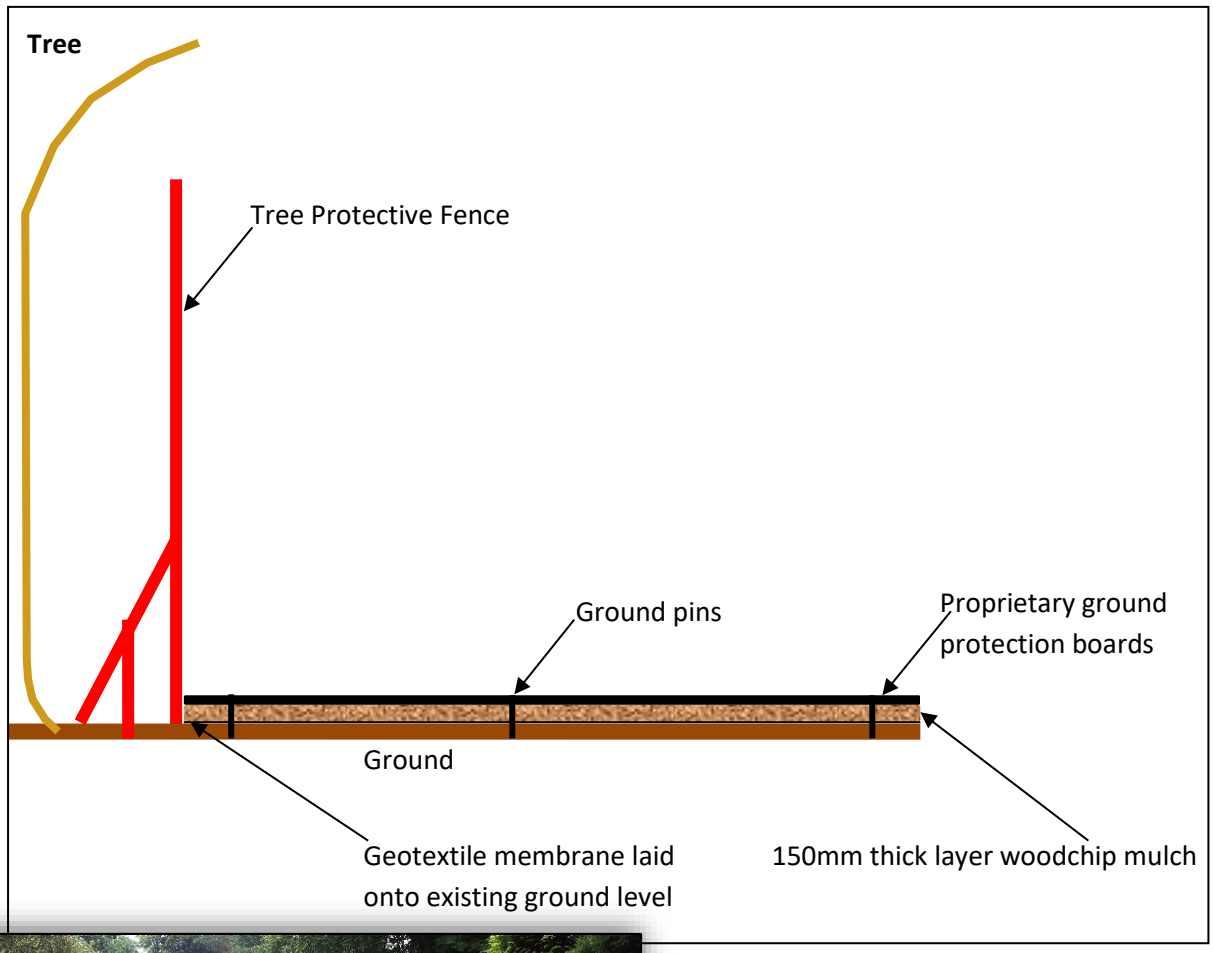

19/03/2021

Figure 4

Example of all-weather warning signs to be affixed to fencing at 10m intervals.

19/03/2021

Figure 5

Arboricultural Consultant Site Visit

Company:	Site:
Consultant:	Date:
Address:	Site Address:
Representative:	Site Representative
Phone:	Phone

Purpose:
Site meetings:
Observations:
Recommendations

19/03/2021

Next site visit:

5. Qualifications

This report was constructed and written by

Oliver Lower ND Arb L3, Dip Arb L4, Dip Arb L6
Director & Principal Arboricultural Consultant

I have 18yrs experience in the Arboricultural industry having worked in both the UK and New Zealand during that time. and have attained the following accreditations an Level 4 Diploma (ABC) & Level 6 Diploma (ABC) in Arboriculture as well as a LANTRA Professional Tree Inspection Qualification. I provide consultancy service to a number of local government authorities and tutor in Arboriculture at Merrist Wood college. A comprehensive list of my qualifications, experience and training can be found on LinkedIn using this link: https://www.linkedin.com/in/oliver-lower-527a7377/

Qualifications:

Professional Tree Inspection (LANTRA)

National Diploma Arboriculture L3

Level 4 Diploma Arboriculture (ABC)

Level 6 Diploma Arboriculture (ABC)

Bibliography

Strouts & Winter, R.G. & T.G., 1994. *Diagnosis of Ill Health in Trees*. 2nd ed. Standish: Arboricultural Assosciation.

Standards publication, BSI, 2012. *Trees in relation to design, demolition and construction - Recommendations*. 1st ed. London: BSI.

Mattheck & Breloer, C & H, 1993. *The body language of trees*. 5th ed. Karlsruhe Research Centre: The Stationary Office.

British Standards Publication, BSi, 2012. *BS 5837:2012 'Trees in relation to design, demolition and construction - Recommendations*. 4th ed. London: BSI.

British Standards Publication, BSi, 2010. *Tree Work - Recommendations*. 3rd ed. London: BSi

Mattheck, C, 2007. *Updated Field Guide for Visual Tree Assessment*. 1st ed. Kerlsruhe Research Centre: Forschungszentrum Karlsruhe GmbH.

Weber, Mattheck, K.C 2003. *Manual of Wood Decays in Trees.* 1st ed. Kerl sruhe Research Centre: Forschungszentrum Karlsruhe GmbH.

Mattheck, Bethge, Weber, C,K,K, 2015. *The Body Language of Trees, Encyclopedia of Visual Tree Assessment* 1st ed. Kerlsruhe Research Centre: Forschungszentrum Karlsruhe GmbH.

British Standards Institute, 2014. *Trees: from nursery to independence in the landscape – Recommendations.* 1st ed. London: BSi

Trees & Design Action Group, 2014. *Trees in Hard Lanscapes, A Guide for Delivery.* 1st ed. London.

National Joint Utilities Group "Guidelines for the planning, installation and maintenance of utility services in proximity to trees, 1995."