Hydro International®

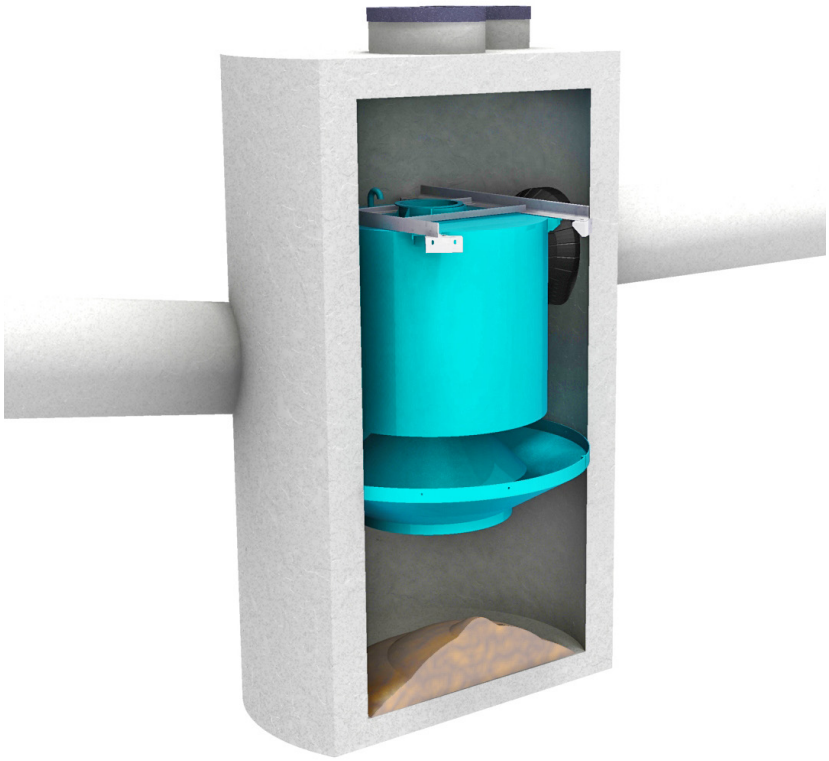

Operation and Maintenance Manual

Downstream Defender®

Vortex Separator for Stormwater Treatment

Turning Water Around ...®

Table of Contents

3 **Downstream Defender® by Hydro International**
- **Benefits of the Downstream Defender®**
- **Applications**
- **Downstream Defender® Components**

4 **Operation**
- **Introduction**
- **Pollutant Capture and Retention**
- **Wet Sump**
- **Blockage Protection**

4 **Maintenance**
- **Overview**
- **Determining You Maintenance Schedule**

5 **Maintenance Procedures**
- **Inspection**
- **Floatables and Sediment Cleanout**

8 **Downstream Defender® Installation Log**

9 **Downstream Defender® Inspection and Maintenance Log**

COPYRIGHT STATEMENT: The contents of this manual, including the drawings and specifications contained herein or annexed hereto, are intended for the use of the recipient to whom the document and all associated information are directed. Hydro International plc owns the copyright of this document (including any drawings or graphics), which is supplied in confidence. It must not be used for any purpose other than that for which it is supplied and must not be reproduced, in whole or in part stored in a retrieval system or transmitted in any form or by any means without prior permission in writing from Hydro International plc. Downstream Defender® is a trademarked hydrodynamic vortex separation device of Hydro International plc. A patent covering the Downstream Defender® has been granted.

DISCLAIMER: Information and data contained in this manual is exclusively for the purpose of assisting in the operation and maintenance of Hydro International plc's Downstream Defender®. No warranty is given nor can liability be accepted for use of this information for any other purpose. Hydro International plc have a policy of continuous product development and reserve the right to amend specifications without notice.

Hydro International (Stormwater), 94 Hutchins Drive, Portland ME 04102
Tel: (207) 756-6200 Fax: (207) 756-6212 Web: www.hydro-int.com

Downstream Defender® by Hydro International

The Downstream Defender® is an advanced Hydrodynamic Vortex Separator designed to provide high removal efficiencies of settleable solids and their associated pollutants, oil, and floatables over a wide range of flow rates.

The Downstream Defender® has unique, flow-modifying internal components developed from extensive full-scale testing, CFD modeling and over thirty years of hydrodynamic separation experience in wastewater, combined sewer and stormwater applications. These internal components distinguish the Downstream Defender® from simple swirl-type devices and conventional oil/grit separators by minimizing turbulence and headlosses, enhancing separation, and preventing washout of previously stored pollutants.

The high removal efficiencies and inherent low headlosses of the Downstream Defender® allow for a small footprint making it a compact and economical solution for the treatment of non-point source pollution.

Benefits of the Downstream Defender®

- Removes sediment, floatables, oil and grease
- No pollutant washouts
- Small footprint
- No loss of treatment capacity between clean-outs
- Low headloss
- Efficient over a wide ranges of flows
- Easy to install
- Low maintenance

Applications

- New developments and retrofits
- Utility yards
- Streets and roadways
- Parking lots
- Pre-treatment for filters, infiltration and storage
- Industrial and commercial facilities
- Wetlands protection

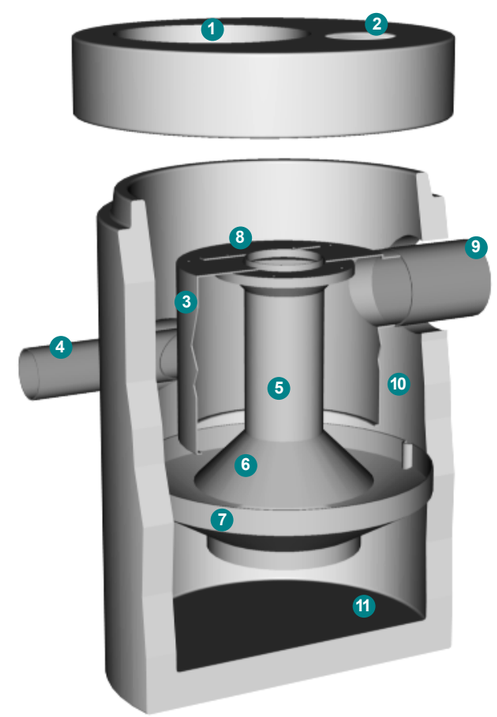

Downstream Defender® Components

1. Central Access Port
2. Floatables Access Port (6-ft., 8-ft. and 10-ft. models only)
3. Dip Plate
4. Tangential Inlet
5. Center Shaft
6. Center Cone
7. Benching Skirt
8. Floatables Lid
9. Outlet Pipe
10. Floatables Storage
11. Isolated Sediment Storage Zone

Hydro Maintenance Services

Hydro International has been engineering stormwater treatment systems for over 30 years. We understand the mechanics of removing pollutants from stormwater and how to keep systems running at an optimal level.

Nobody Knows our Systems Better than we do

Avoid Service Negligence

Sanitation services providers not intimately familiar with stormwater treatment systems are at risk of the following:

- Inadvertently breaking parts or failing to clean/replace system components appropriately.
- Charging you for more frequent maintenance because they lacked the tools to service your system properly in the first place.
- Billing you for replacement parts that might have been covered under your Hydro warranty plan
- Charging for maintenance that may not yet have been required.

Leave the Dirty Work to us

Trash, sediment and polluted water is stored inside treatment systems until they are removed by our team with a vactor truck. Sometimes teams must physically enter the system chambers in order to prepare the system for maintenance and install any replacement parts. Services include but are not limited to:

- Solids removal
- Removal of liquid pollutants
- Replacement media installation (when applicable)

Hydro International (Stormwater), 94 Hutchins Drive, Portland ME 04102
Tel: (207) 756-6200 Fax: (207) 756-6212 Web: www.hydro-int.com

Downstream Defender® Operation and Maintenance Manual

Better Tools, Better Results

Not all vactor trucks are created equal. Appropriate tools and suction power are needed to service stormwater systems appropriately. Companies who don't specialize in stormwater treatment won't have the tools to properly clean systems or install new parts.

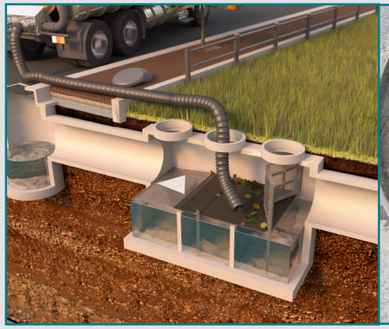

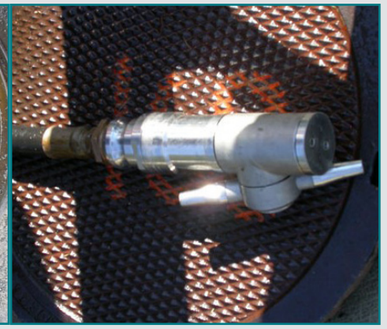

Service Warranty

Make sure you're not paying for service that is covered under your warranty plan. Only Hydro International's service teams can identify tune-ups that should be on us, not you.

Treatment Systems Serviced by Hydro:

- Stormwwater filters
- Stormwater separators
- Baffle boxes
- Biofilters/biorention systems
- Storage structures
- Catch basins
- Stormwater ponds
- Permeable pavement

SAVE TIME & MONEY: CALL HYDRO FOR A QUOTE

1 (888) 382-7808

LEARN MORE AT HYDRO-INT.COM/SERVICE

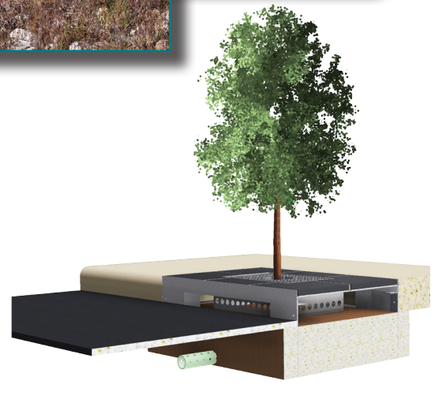

Operation

Introduction

The Downstream Defender® operates on simple fluid hydraulics. It is self-activating, has no moving parts, no external power requirement and is fabricated with durable non-corrosive components. No manual procedures are required to operate the unit and maintenance is limited to monitoring accumulations of stored pollutants and periodic clean-outs. The Downstream Defender® has been designed to allow for easy and safe access for inspection/monitoring and clean-out procedures. Entry into the unit or removal of the internal components is not necessary for maintenance, thus safety concerns related to confined-space-entry are avoided.

Pollutant Capture and Retention

The internal components of the Downstream Defender® have been designed to protect the oil, floatables and sediment storage volumes so that separator performance is not reduced as pollutants accumulate between clean-outs. Additionally, the Downstream Defender® is designed and installed into the storm drain system so that the vessel remains wet between storm events. Oil and floatables are stored on the water surface in the outer annulus separate from the sediment storage volume in the sump of the unit providing the option for separate oil disposal, and accessories such as adsorbant pads. Since the oil/floatables and sediment storage volumes are isolated from the active separation region, the potential for re-suspension and washout of stored pollutants between clean-outs is minimized.

Wet Sump

The sump of the Downstream Defender® retains a standing water level between storm events. The water in the sump prevents stored sediment from solidifying in the base of the unit. The clean-out procedure becomes more difficult and labor intensive if the system allows fine sediment to dry-out and consolidate. Dried sediment must be manually removed by maintenance crews. This is a labor intensive operation in a hazardous environment.

Blockage Protection

The Downstream Defender® has large clear openings and no internal restrictions or weirs, minimizing the risk of blockage and hydraulic losses. In addition to increasing the system headloss, orifices and internal weirs can increase the risk of blockage within the unit.

Maintenance

Overview

The Downstream Defender® protects the environment by removing a wide range of pollutants from stormwater runoff. Periodic removal of these captured pollutants is essential to the continuous, long-term functioning of the Downstream Defender®. The Downstream Defender® will capture and retain sediment and oil until the sediment and oil storage volumes are full to capacity. When sediment and oil storage capacities are reached, the Downstream Defender® will no longer be able to store removed sediment and oil. Maximum pollutant storage capacities are provided in Table 1.

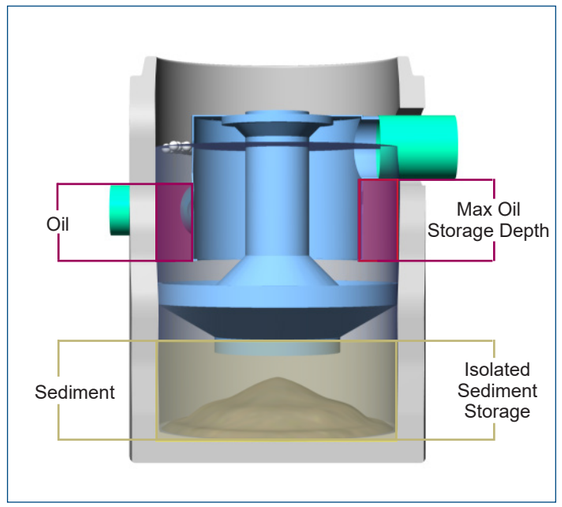

Fig.1 Pollutant storage volumes of the Downswtream Defender®.

Hydro International (Stormwater), 94 Hutchins Drive, Portland ME 04102
Tel: (207) 756-6200 Fax: (207) 756-6212 Web: www.hydro-int.com

The Downstream Defender® allows for easy and safe inspection, monitoring and clean-out procedures. A commercially or municipally owned sump-vac is used to remove captured sediment and floatables. Access ports are located in the top of the manhole. On the 6-ft, 8-ft and 10-ft units, the floatables access port is above the outlet pipe between the concrete manhole wall and the dip plate. The sediment removal access ports for all Downstream Defender® models are located directly over the hollow center shaft.

Maintenance events may include Inspection, Oil & Floatables Removal, and Sediment Removal. Maintenance events do not require entry into the Downstream Defender®, nor do they require the internal components of the Downstream Defender® to be removed. In the case of inspection and floatables removal, a vactor truck is not required. However, a vactor truck is required if the maintenance event is to include oil removal and/or sediment removal.

Determining Your Maintenance Schedule

The frequency of cleanout is determined in the field after installation. During the first year of operation, the unit should be inspected every six months to determine the rate of sediment and floatables accumulation. A simple probe such as a Sludge Judge® can be used to determine the level of accumulated solids stored in the sump. This information can be recorded in the maintenance log (see page 9) to establish a routine maintenance schedule.

The vactor procedure, including both sediment and oil/flotables removal, for a 6-ft Downstream Defender® typically takes less than 30 minutes and removes a combined water/oil volume of about 500 gallons.

Inspection Procedures

Inspection is a simple process that does not involve entry into the Downstream Defender®. Maintenance crews should be familiar with the Downstream Defender® and its components prior to inspection.

Scheduling

- It is important to inspect your Downstream Defender® every six months during the first year of operation to determine your site-specific rate of pollutant accumulation
- Typically, inspection may be conducted during any season of the year
- Sediment removal is not required unless sediment depths exceed 75% of maximum clean-out depths stated in Table 1

Recommended Equipment

- Safety Equipment and Personal Protective Equipment (traffic cones, work gloves, etc.)
- Crow bar or other tool to remove grate or lid
- Pole with skimmer or net
- Sediment probe (such as a Sludge Judge®)
- Trash bag for removed floatables
- Downstream Defender® Maintenance Log

Table 1. Downstream Defender® Pollutant Storage Capacities and Max. Cleanout Depths.

Unit Diameter	Total Oil Storage	Oil Clean-out Depth	Total Sediment Storage	Sediment Clean-out Depth	Max. Liquid Volume Removed
(feet)	(gallons)	(inches)	(gallons)	(inches)	(gallons)
4	70	<16	141	<18	384
6	216	<23	424	<24	1,239
8	540	<33	939	<30	2,884
10	1,050	<42	1,757	<36	5,546
12	1,770	<49	2,970	<42	9,460

NOTES

1. Refer to Dowmstream Defender® Clean-out Detail (Fig. 1) for measurement of depths.

2. Oil accumulation is typically less than sediment, however, removal of oil and sediment during the same service is recommended.

3. Remove floatables first, then remove sediment storage volume.

4. Sediment removal is not required unless sediment depths exceed 75% of maximum clean-out depths stated in Table 1.

Fig.4

Fig.5

Fig.6

Inspection Procedures

1. Set up any necessary safety equipment around the access port or grate of the Downstream Defender® as stipulated by local ordinances. Safety equipment should notify passing pedestrian and road traffic that work is being done.

2. Remove the lids to the manhole (Fig. 4). NOTE: The 4-ft Downstream Defender® will only have one lid.

3. Without entering the vessel, look down into the chamber to inspect the inside. Make note of any irregularities. See Fig.7 and 8 for typical inspection views.

4. Without entering the vessel, use the pole with the skimmer net to remove floatables and loose debris from the outer annulus of the chamber.

5. Using a sediment probe such as a Sludge Judge®, measure the depth of sediment that has collected in the sump of the vessel (Fig.5).

6. On the Maintenance Log (see page 9), record the date, unit location, estimated volume of floatables and gross debris removed, and the depth of sediment measured. Also note any apparent irregularities such as damaged components or blockages.

7. Securely replace the grate or lid.

8. Take down safety equipment.

9. Notify Hydro International of any irregularities noted during inspection.

Floatables and Sediment Cleanout

Floatables cleanout is typically done in conjunction with sediment removal. A commercially or municipally owned sump-vac is used to remove captured sediment and floatables (Fig.6).

Floatables and loose debris can also be netted with a skimmer and pole. The access port located at the top of the manhole provides unobstructed access for a vactor hose and skimmer pole to be lowered to the base of the sump.

Scheduling

- Floatables and sump cleanout are typically conducted once a year during any season.
- If sediment depths are greater than 75% of maximum clean-out depths stated in Table 1, sediment removal is required.
- Floatables and sump cleanout should occur as soon as possible following a spill in the contributing drainage area.

Fig.7 View over center shaft into sediment storage zone.

Fig.8 View of outer annulus of floatables and oil collection zone.

Hydro International (Stormwater), 94 Hutchins Drive, Portland ME 04102
Tel: (207) 756-6200 Fax: (207) 756-6212 Web: www.hydro-int.com

Recommended Equipment

- Safety Equipment (traffic cones, etc)
- Crow bar or other tool to remove grate or lid
- Pole with skimmer or net (if only floatables are being removed)
- Sediment probe (such as a Sludge Judge®)
- Vactor truck (6-inch flexible hose recommended)
- Downstream Defender® Maintenance Log

1. Set up any necessary safety equipment around the access port or grate of the Downstream Defender® as stipulated by local ordinances. Safety equipment should notify passing pedestrian and road traffic that work is being done.

2. Remove the lids to the manhole (NOTE: The 4-ft Downstream Defender® will only have one lid).

3. Without entering the vessel, look down into the chamber to inspect the inside. Make note of any irregularities.

4. Using the Floatables Port for access, remove oil and floatables stored on the surface of the water with the vactor hose or the skimmer net (Fig.9).

5. Using a sediment probe such as a Sludge Judge®, measure the depth of sediment that has collected in the sump of the vessel and record it in the Maintenance Log (Pg.9).

6. Once all floatables have been removed, drop the vactor hose to the base of the sump via the Central Access Port. Vactor out the sediment and gross debris off the sump floor (Fig.6).

7. Retract the vactor hose from the vessel.

8. On the Maintenance Log provided by Hydro International, record the date, unit location, estimated volume of floatables and gross debris removed, and the depth of sediment measured. Also note any apparent irregularities such as damaged components or blockages.

9. Securely replace the grate or lid.

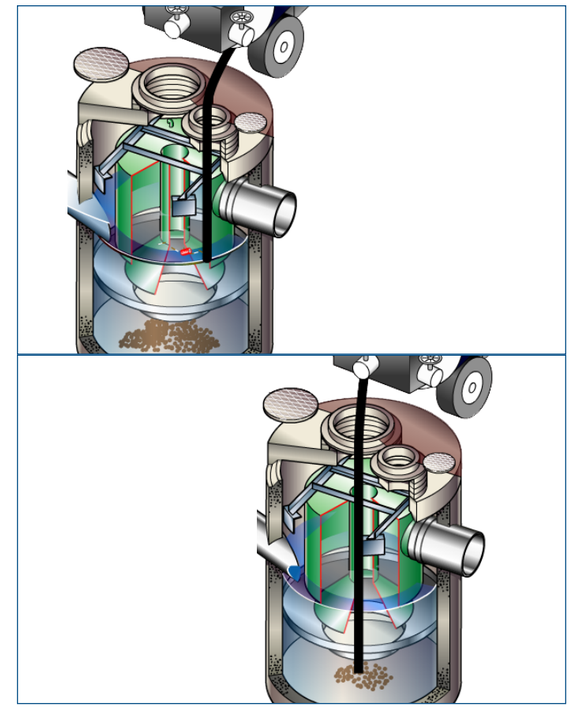

Fig.9 Floatables and sediment are removed with a vactor hose

Maintenance at a Glance

Activity	Frequency
Inspection	- Regularly during first year of installation - Every 6 months after the first year of installation
Oil and Floatables Removal	- Once per year, with sediment removal - Following a spill in the drainage area
Sediment Removal	- Once per year or as needed - Following a spill in the drainage area
NOTE: For most cleanouts it is not necessary to remove the entire volume of liquid in the vessel. Only removing the first few inches of oils/floatables and the sediment storage volume is required.	

Downstream Defender® Installation Log

HYDRO INTERNATIONAL REFERENCE NUMBER:	
SITE NAME:	
SITE LOCATION:	
OWNER:	CONTRACTOR:
CONTACT NAME:	CONTACT NAME:
COMPANY NAME:	COMPANY NAME:
ADDRESS:	ADDRESS:
TELEPHONE:	TELEPHONE:
FAX:	FAX:

INSTALLATION DATE: / /

MODEL (CIRCLE ONE): **4-FT** **6-FT** **8-FT** **10-FT** **CUSTOM**

Hydro International (Stormwater), 94 Hutchins Drive, Portland ME 04102
Tel: (207) 756-6200 Fax: (207) 756-6212 Web: www.hydro-int.com

Downstream Defender® Inspection and Maintenance Log

Date	Initials	Depth of Floatables and Oils	Sediment * Depth Measured	Volume of Sediment Removed	Site Activity and Comments

*Note: Sediment removal is not required unless sediment depths exceed 75% of maximum clean-out depths stated in Table 1.

Hydro International (Stormwater), 94 Hutchins Drive, Portland ME 04102
Tel: (207) 756-6200 Fax: (207) 756-6212 Web: www.hydro-int.com

Notes

Hydro International (Stormwater), 94 Hutchins Drive, Portland ME 04102
Tel: (207) 756-6200 Fax: (207) 756-6212 Web: www.hydro-int.com

Do it Right the First Time

Learn more at hydro-int.com/service

CALL **1 (888) 382-7808** TO SCHEDULE AN INSPECTION

Stormwater Solutions

94 Hutchins Drive
Portland, ME 04102

Tel: (207) 756-6200
Fax: (207) 756-6212
stormwaterinquiry@hydro-int.com

www.hydro-int.com

Turning Water Around...®

©Hydro International DD_O+M_C1705