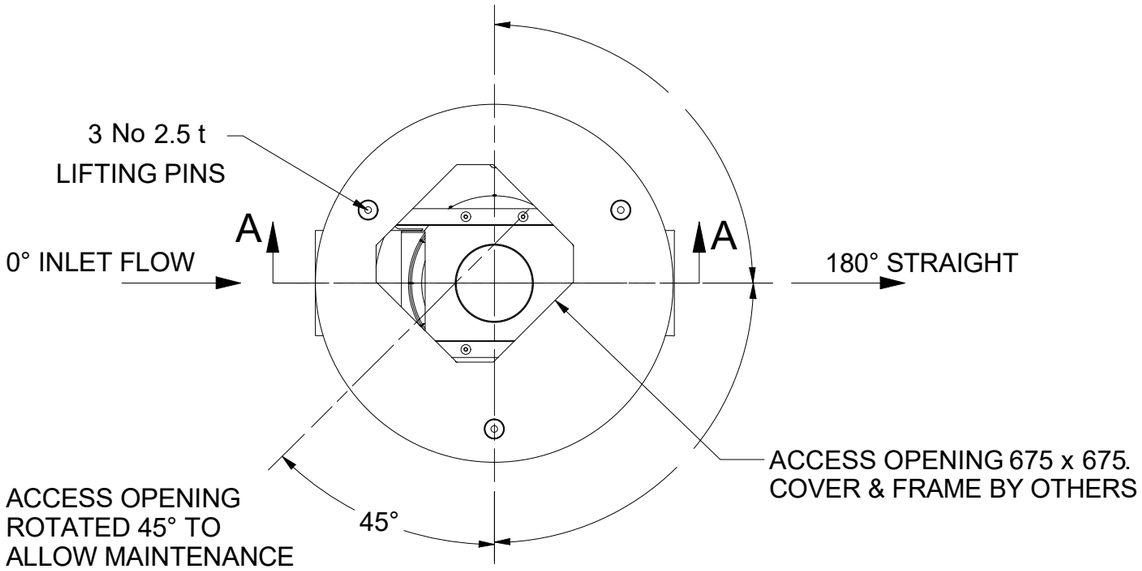

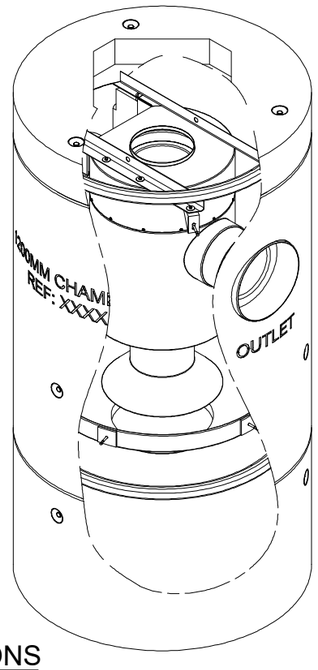

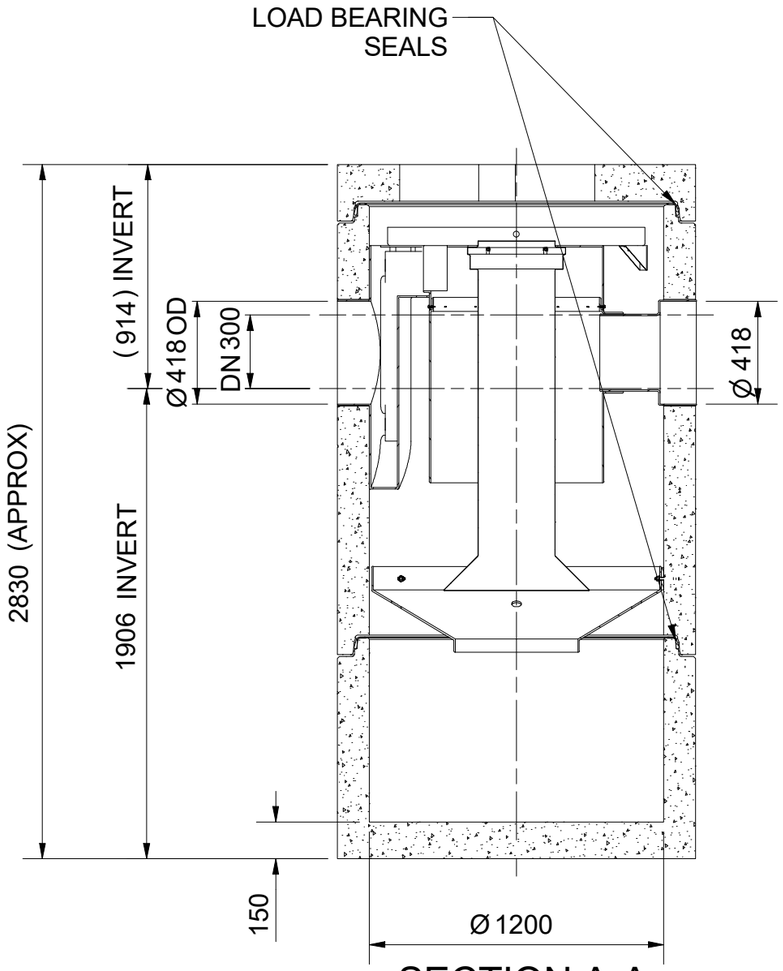

SECTION A-A

PROJECTION

COMMENTS:

1. THIS DRAWING SHALL BE READ IN CONJUNCTION WITH ALL RELEVANT GENERAL ARRANGEMENT & DETAIL DRAWINGS.

2. ALL COMPONENTS SHALL BE MANUFACTURED IN ACCORDANCE WITH THE PRODUCTION SPECIFICATION HRD-FM9/15

REVISION HISTORY			
REV	BY	DESCRIPTION	DATE
A	CRA	FIRST ISSUE	04 FEB 19

DATE: 16/10/2018
SCALE: VARIES
DRAWN BY: DGE
CHECKED BY: CJN
APPROVED BY WCJ

Title
HYDRO INTERNATIONAL
DOWNSTREAM
DEFENDER®

1200 PERFECT MANHOLE
CONCRETE CHAMBER

DESIGN DATA

PRODUCT SPECIFICATIONS

TREATMENT FLOW - COARSE	38 l/s
TREATMENT FLOW - FINE	30 l/s
HYDRAULIC CAPACITY	120 l/s
OIL STORAGE CAPACITY	292.5 l
MIN. SEDIMENT STORAGE CAPACITY	0.39 m³

MAXIMUM HEADLOSS AT TREATMENT
FLOW RATE - COARSE (mm) 150

PROJECT			
-	INVERT	MATERIAL	DIAMETER
COVER			
OUTLET			
INLET			

PARTS LIST	
COMPONENT	MASS
1200 PCC Cover slab	0.5 t
1200 PCC Lower Chamber	1.5 t
1200 PCC Upper Section Assembly	2.2 t
DN300 Inlet / Outlet Pipe (By Others)	N/A
Pre Installed Internal Components	N/A

ANY WARRANTY GIVEN BY HYDRO INTERNATIONAL WILL APPLY ONLY TO THOSE ITEMS SUPPLIED BY IT. ACCORDINGLY HYDRO INTERNATIONAL CANNOT ACCEPT ANY RESPONSIBILITY FOR ANY STRUCTURE, PLANT, OR EQUIPMENT, (OR THE PERFORMANCE THERE OF) DESIGNED, BUILT, MANUFACTURED, OR SUPPLIED BY ANY THIRD PARTY. HYDRO INTERNATIONAL HAVE A POLICY OF CONTINUOUS DEVELOPMENT AND RESERVE THE RIGHT TO AMEND THE SPECIFICATION. HYDRO INTERNATIONAL CANNOT ACCEPT LIABILITY FOR PERFORMANCE OF ITS EQUIPMENT, (OR ANY PART THEREOF), IF THE EQUIPMENT IS SUBJECT TO CONDITIONS OUTSIDE ANY DESIGN SPECIFICATION. HYDRO INTERNATIONAL OWNS THE COPYRIGHT OF THIS DRAWING, WHICH IS SUPPLIED IN CONFIDENCE. IT MUST NOT BE USED FOR ANY PURPOSE OTHER THAN THAT FOR WHICH IT IS SUPPLIED AND MUST NOT BE REPRODUCED, IN WHOLE OR IN PART, WITHOUT PRIOR PERMISSION IN WRITING FROM HYDRO INTERNATIONAL.
©2019 HYDRO INTERNATIONAL

DO NOT SCALE DRAWING

UNLESS OTHERWISE SPECIFIED, DIMENSIONS ARE IN MILLIMETRES
TOLERENCES ARE:

FRACTIONS ± 1/16
DECIMALS ± 1
ANGLES ± 1°

Hydro International®
Shearwater House
Victoria Road
Clevedon, UK
BS21 7RD
Tel: +44 (0)1275 878371
Fax: +44 (0)1275 874979
hydro-int.com

APPROX WEIGHT: 4.28 t
MATERIAL:
REFERENCE: 22995
DRAWING NO.: C 1320-1000-01000
SHEET SIZE: A3
SHEET: 1 OF 1
Rev: A