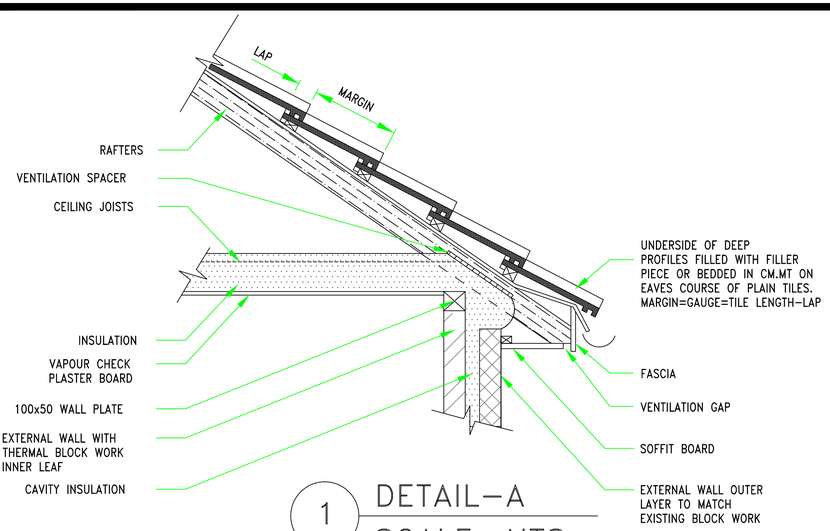

1 DETAIL-A
SCALE: NTS

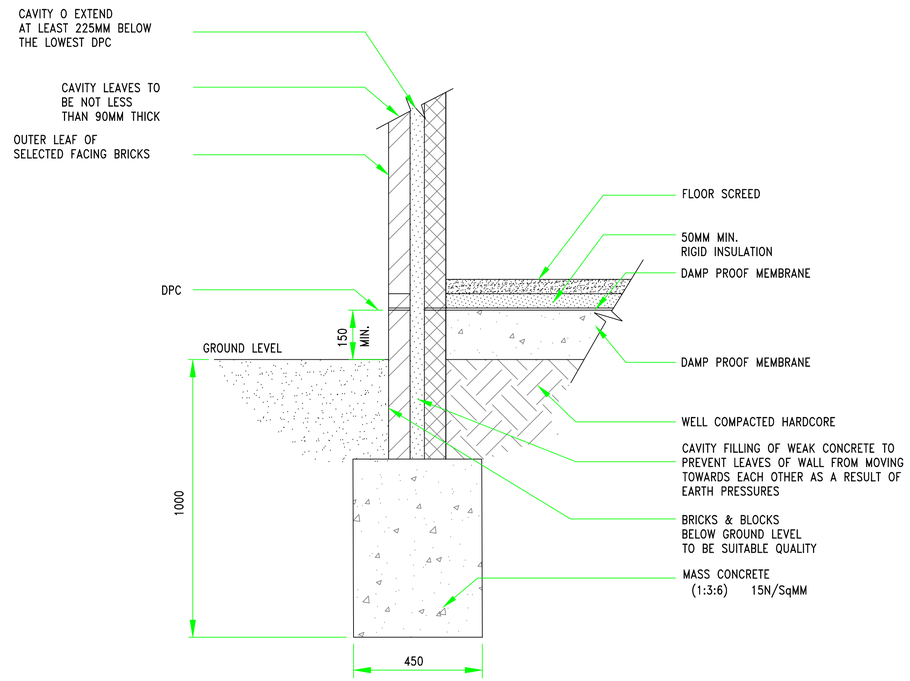

2 DETAIL-B
SCALE: NTS

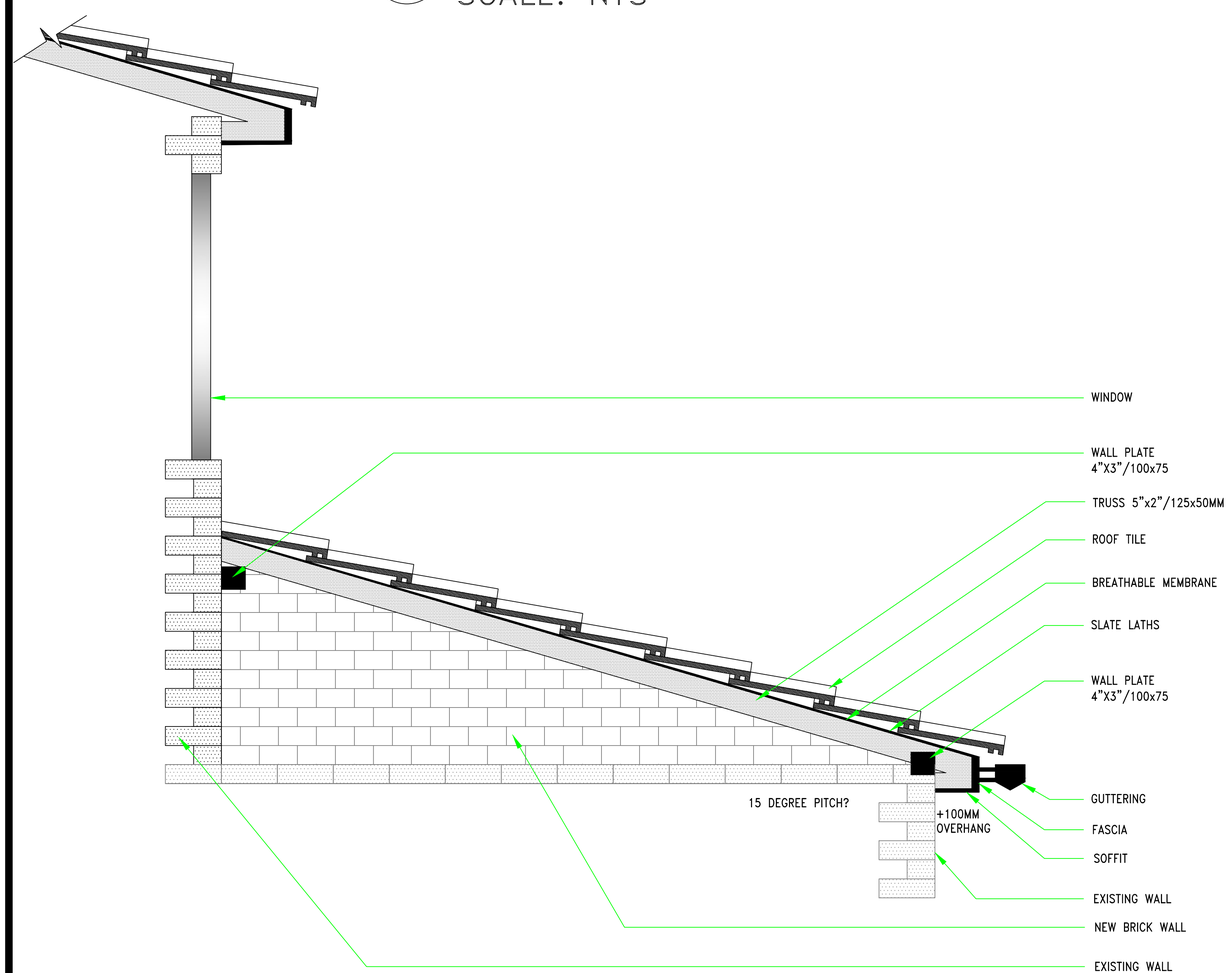

3 DETAIL-C
SCALE: NTS

General Notes

No.	Revision/Issue	Date
1.	DRG NO.06, REV.1	02/10/2019

Firm Name and Address

Project Name and Address

20 ELGAR WALK,
WATERLOOVILLE

Project
SECTION DETAILS

Date
26/06/2019

Scale
1:100

Sheet
06