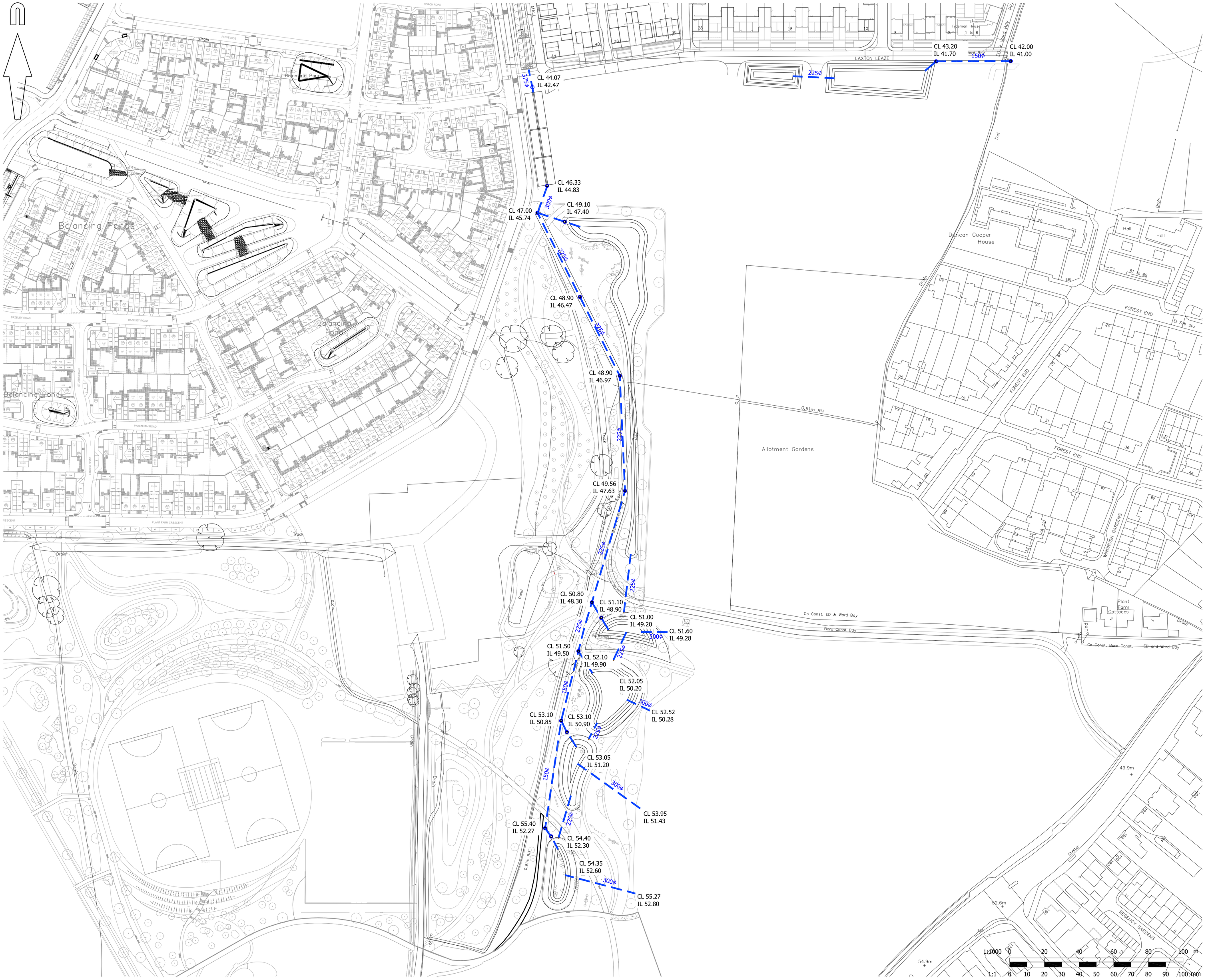

© Mayer Brown Limited Copyright. The drawings, information and data recorded in this document ("the Information") is the property of Mayer Brown. This document and the information are solely for the use of the authorised recipient and this document may not be used, copied or reproduced in whole or part for any purposes other than which it was supplied by Mayer Brown. Mayer Brown makes no representation, undertakes no duty and accepts no responsibilities to any third party who may use or rely upon this document or the Information.

A1 ORIGINAL

© Crown Copyright and database rights 2019 Ordnance Survey 0100031673

Key

- Proposed Manhole
- Proposed Surface Water Pipes

Berewood
HAMPSHIRE

FOR APPROVAL
NOT FOR CONSTRUCTION

rev.	amendment	checked	date

mayer brown

Mayer Brown Limited Lion House
Oriental Road Woking Surrey GU22 8AR
Telephone 01483 750 508 Fax 01483 750 437
wokingoffice@mayerbrown.co.uk www.mayerbrown.co.uk

client
Investing in homes since 1912
grainger plc

project
BEREWOOD, WATERLOOVILLE
PHASE 8

scale	1:1000	drawn by	KDB	checked by	RHA
date	January 2019	cad file	DR_01.dwg		

title
PHASE 3B & PHASE 8
DRAINAGE LAYOUT

drawing number
GTWVILLE_P8/DR/01

rev.

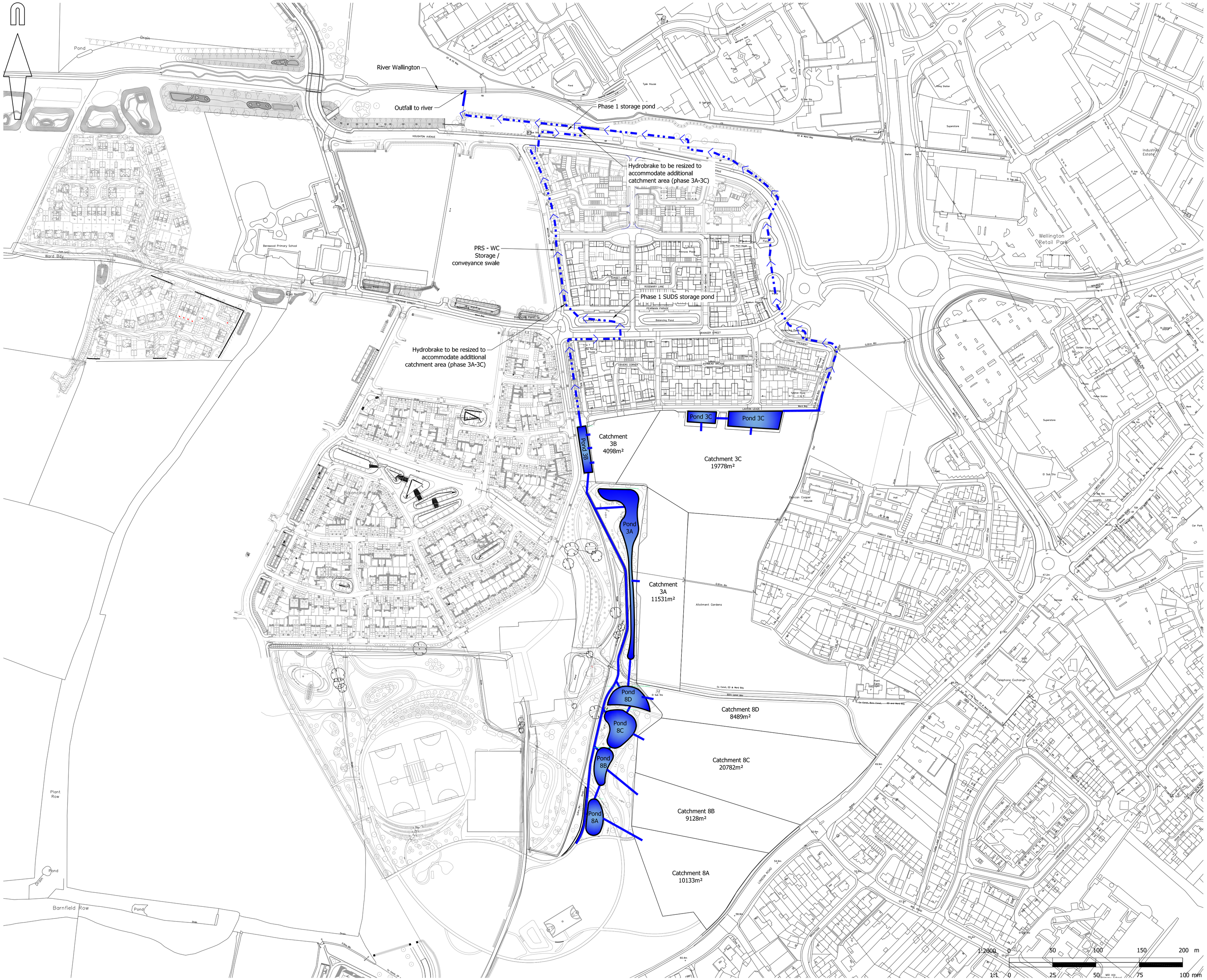

© Mayer Brown Limited Copyright. The drawings, information and data recorded in this document ("the Information") is the property of Mayer Brown. This document and the information are solely for the use of the authorised recipient and this document may not be used, copied or reproduced in whole or part for any purposes other than which it was supplied by Mayer Brown. Mayer Brown makes no representation, undertakes no duty and accepts no responsibilities to any third party who may use or rely upon this document or the Information.

A1 ORIGINAL

© Crown Copyright and database rights 2019 Ordnance Survey 0100031673

Berewood
HAMPSHIRE

FOR APPROVAL
NOT FOR CONSTRUCTION

rev.	amendment	checked	date

mayer brown

Mayer Brown Limited Lion House
Oriental Road Woking Surrey GU22 8AR
Telephone 01483 750 508 Fax 01483 750 437
wokingoffice@mayerbrown.co.uk www.mayerbrown.co.uk

client
Investing in homes since 1912
grainger plc

project
BEREWOOD, WATERLOOVILLE
PHASE 8

scale	1:2000	drawn by	KDB	checked by	RHA
date	January 2019	cad file	SK_02.dwg		

title
PHASE 3B & PHASE 8
DRAINAGE ROUTE

drawing number
GTWVILLE_P8/SK/02

rev.

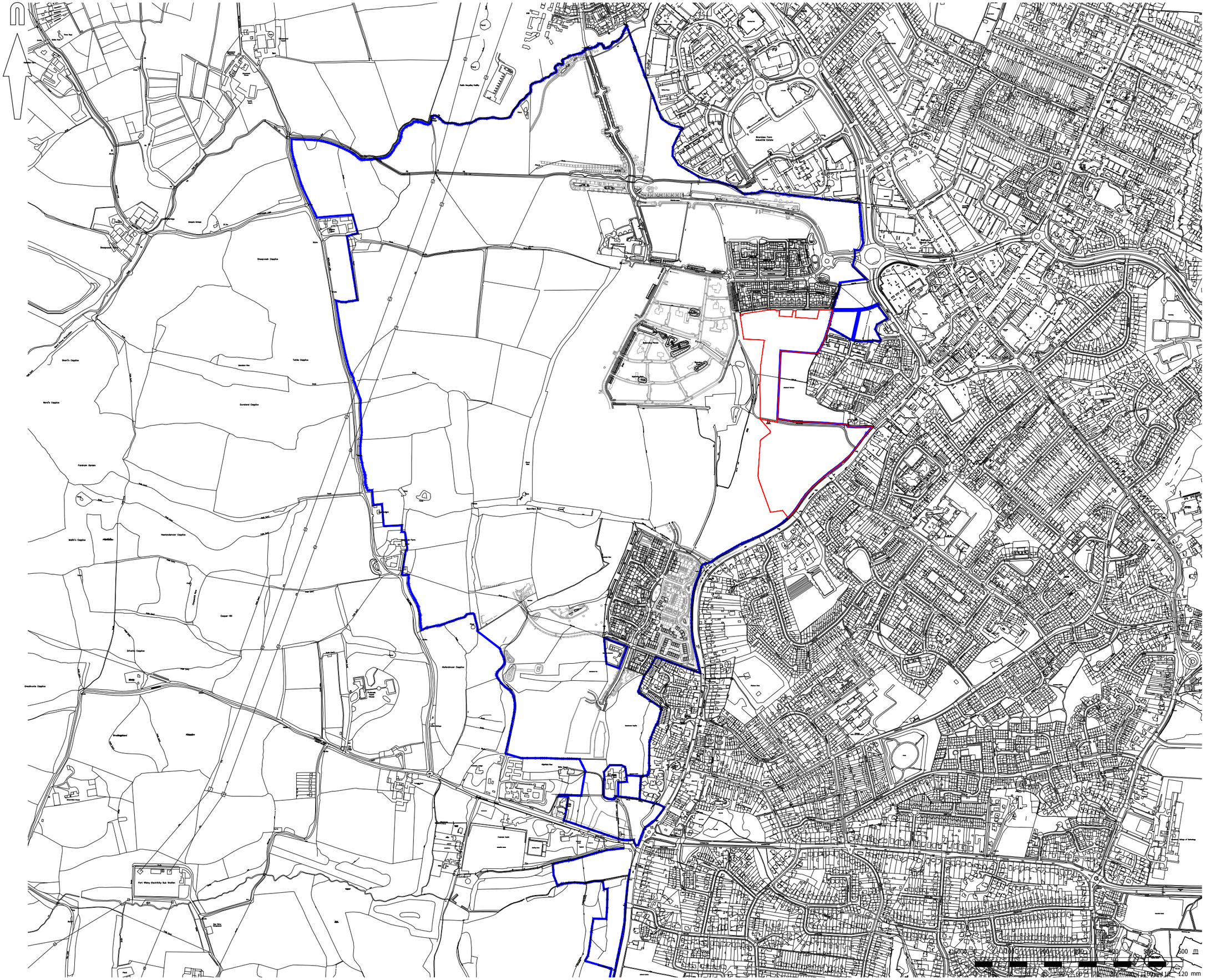

© Mayer Brown Limited Copyright. The drawings, information and data recorded in this document ("the information") is the property of Mayer Brown. This document and the information are solely for the use of the authorised recipient and this document may not be used, copied or reproduced in whole or part for any purposes other than which it was supplied by Mayer Brown. Mayer Brown makes no representation, undertakes no duty and accepts no responsibilities to any third party who may use or rely upon this document or the information.

A1 ORIGINAL

© Crown Copyright and database rights 2018 Ordnance Survey 0100031673

KEY

PHASE 8 BOUNDARY

GRAINGER BOUNDARY

Berewood
HAMPSHIRE

FOR APPROVAL
NOT FOR CONSTRUCTION

rev.	amendment	checked	date

mayer brown

Mayer Brown Limited Lion House
Oriental Road Woking Surrey GU22 8AR
Telephone 01483 750 508 Fax 01483 750 437
wokingoffice@mayerbrown.co.uk www.mayerbrown.co.uk

client
Investing in homes since 1912
grainger plc

project
BEREWOOD, WATERLOOVILLE
PHASE 3B AND 8

scale	1:5000	drawn by	KDB	checked by	RHA
date	January 2019	cad file	SK_03.dwg		

title
PHASE 3B AND 8 LOCATION PLAN

drawing number	rev.
GTWVILLE_P8/SK/03	

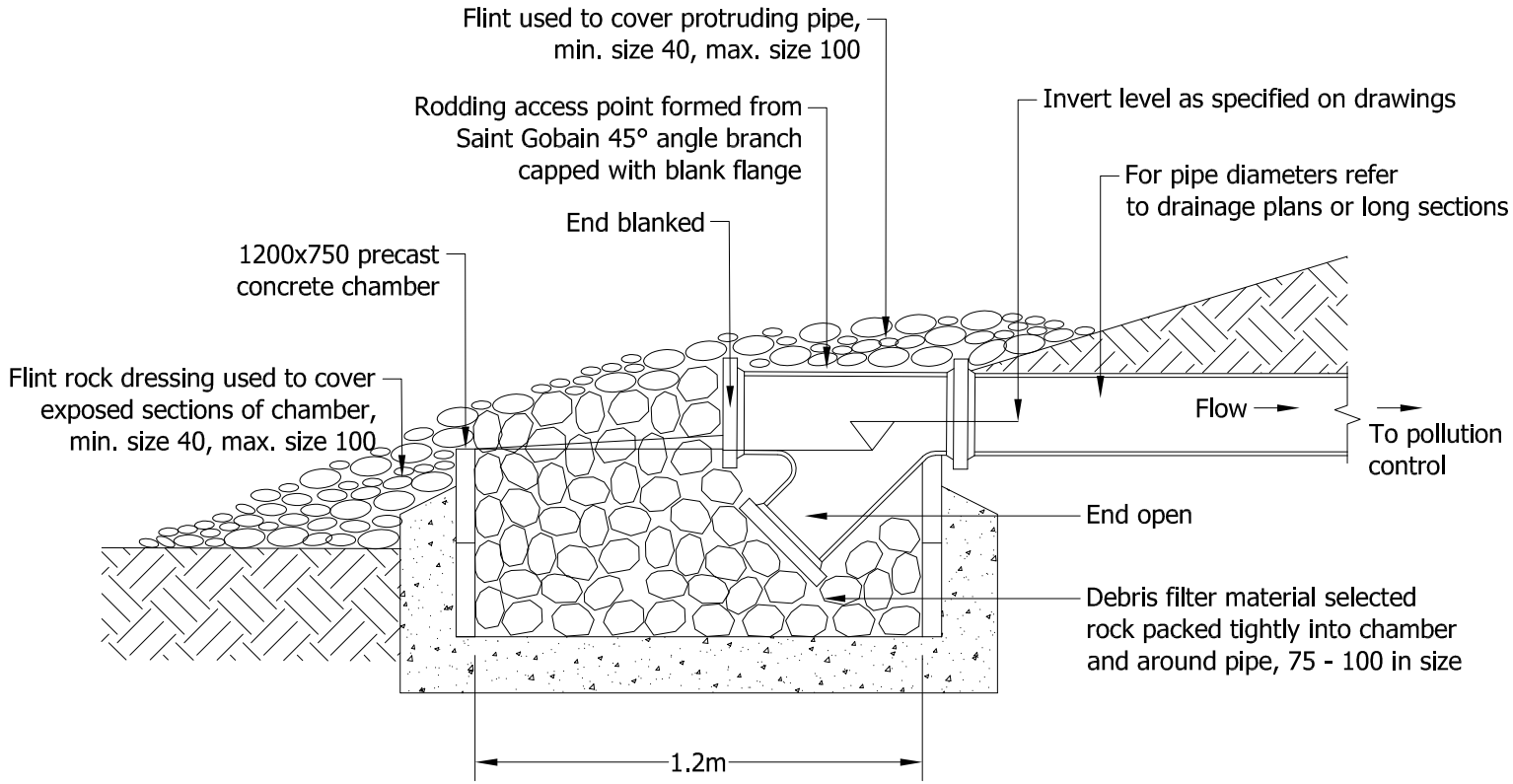

© Mayer Brown Limited Copyright. The drawings, information and data recorded in this document ("the information") is the property of Mayer Brown. This document and the information are solely for the use of the authorised recipient and this document may not be used, copied or reproduced in whole or part for any purposes other than which it was supplied by Mayer Brown. Mayer Brown makes no representation, undertakes no duty and accepts no responsibilities to any third party who may use or rely upon this document or the information.

A4 ORIGINAL

Notes:

1. All dimensions are in millimetres unless stated otherwise.
2. All exposed ductile pipe to be painted black. Colour - RAL 9005 (Jet Black). Finish - Matt 30% gloss mix.
3. All pipework from the outfall to the first chamber beyond the pollution control valve shall be ductile iron.

Berewood HAMPSHIRE

FOR APPROVAL
NOT FOR CONSTRUCTION

rev.	amendment	checked	date

mayer brown
Mayer Brown Limited Lion House
Oriental Road Woking Surrey GU22 8AR
Telephone 01483 750 508 Fax 01483 750 437
wokingoffice@mayerbrown.co.uk www.mayerbrown.co.uk

client: grainger plc (Investing in homes since 1912)

project: BEREWOOD, WATERLOOVILLE TOWN PARK PHASE 2

title: TYPICAL SUDS OUTFALL DETAIL TYPE 1

scale	drawn by	checked by
1:20	LS	RHA

date	cad file
JANUARY 2019	507.dwg

drawing number: GTWVILLE_TP2/CD/507

rev.

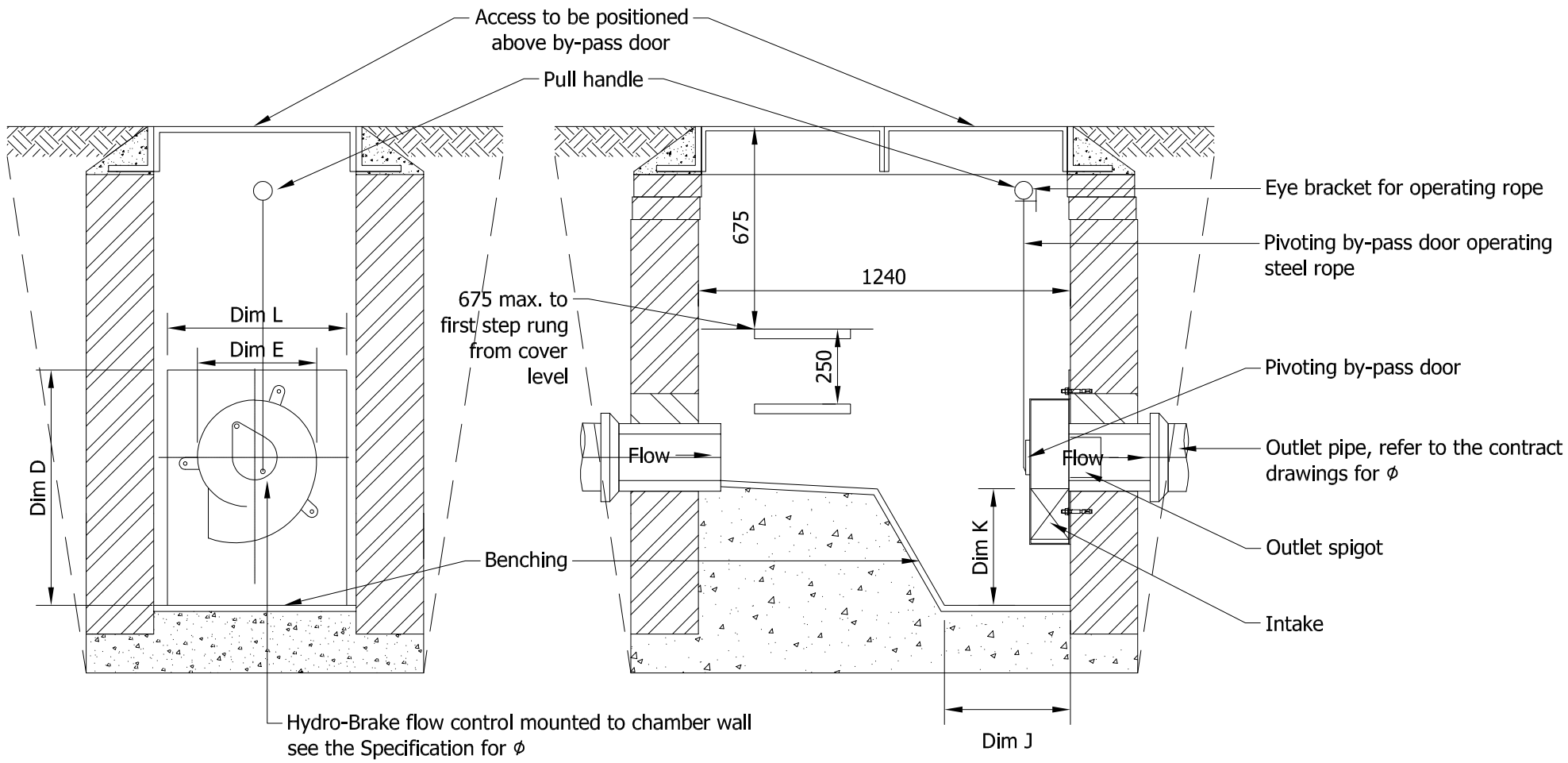

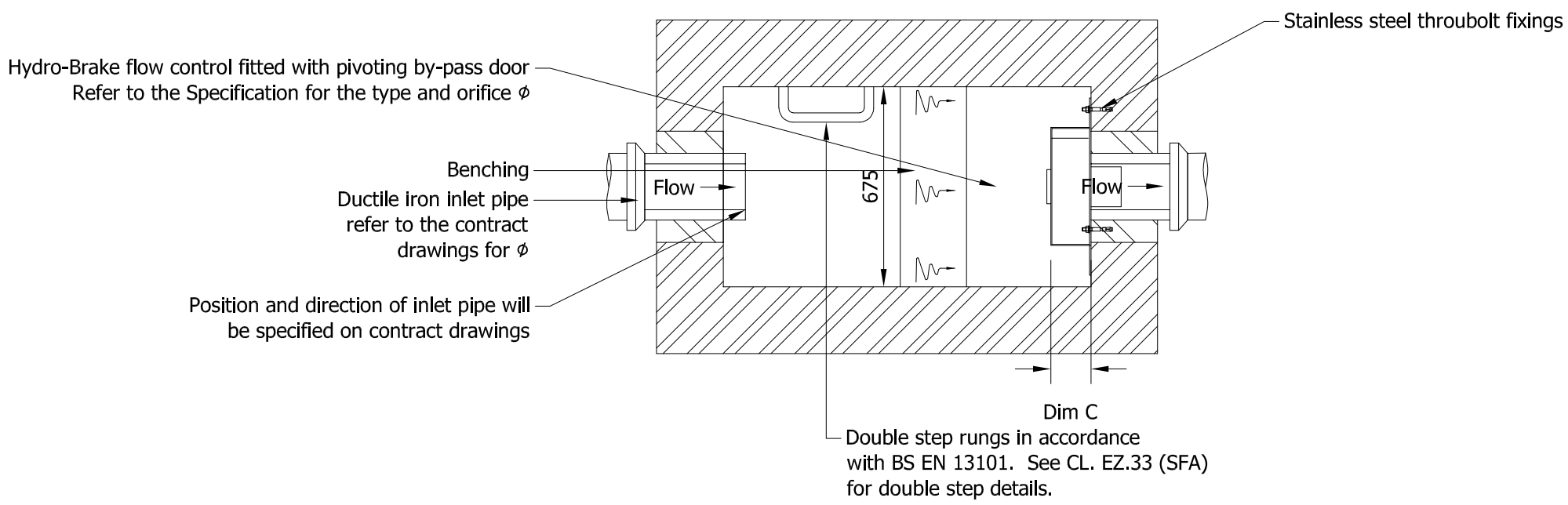

© Mayer Brown Limited Copyright. The drawings, information and data recorded in this document ("the Information") is the property of Mayer Brown. This document and the information are solely for the use of the authorised recipient and this document may not be used, copied or reproduced in whole or part for any purposes other than which it was supplied by Mayer Brown. Mayer Brown makes no representation, undertakes no duty and accepts no responsibilities to any third party who may use or rely upon this document or the information.

A3 ORIGINAL

Notes:

1. Flow controls are critical to the drainage design, alternative proposals for flow controls to be provided to the Designer for verification. The Contractor will pay re-design fees directly to the Designer in this instance.

2. All dimensions are in mm unless stated otherwise.

Berewood HAMPSHIRE

FOR APPROVAL
NOT FOR CONSTRUCTION

rev.	amendment	checked	date

mayer brown

Mayer Brown Limited Lion House
Oriental Road Woking Surrey GU22 8AR
Telephone 01483 750 508 Fax 01483 750 437
wokingoffice@mayerbrown.co.uk www.mayerbrown.co.uk

client
Investing in homes since 1912
grainger plc

project
BEREWOOD, WATERLOOVILLE
TOWN PARK PHASE 2

scale	1:20	drawn by	HJ	checked by	RHA
date	JANUARY 2019	cad file	508.dwg		

title
TYPICAL HYDROBRAKE CHAMBER
TYPE 3

drawing number
GTWVILLE_TP2/CD/508

rev.

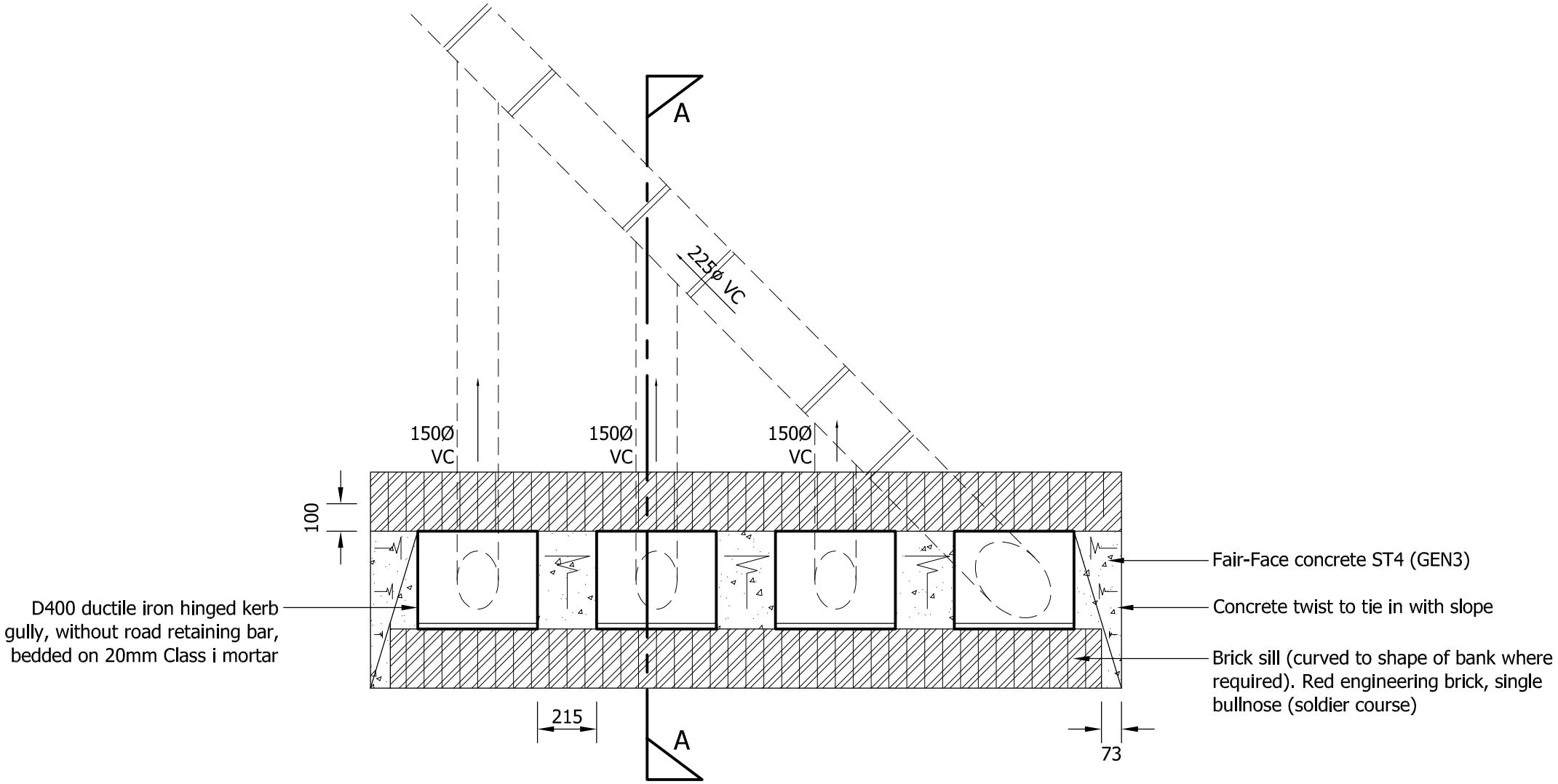

Gully Weir - Overflow to downstream pipe work

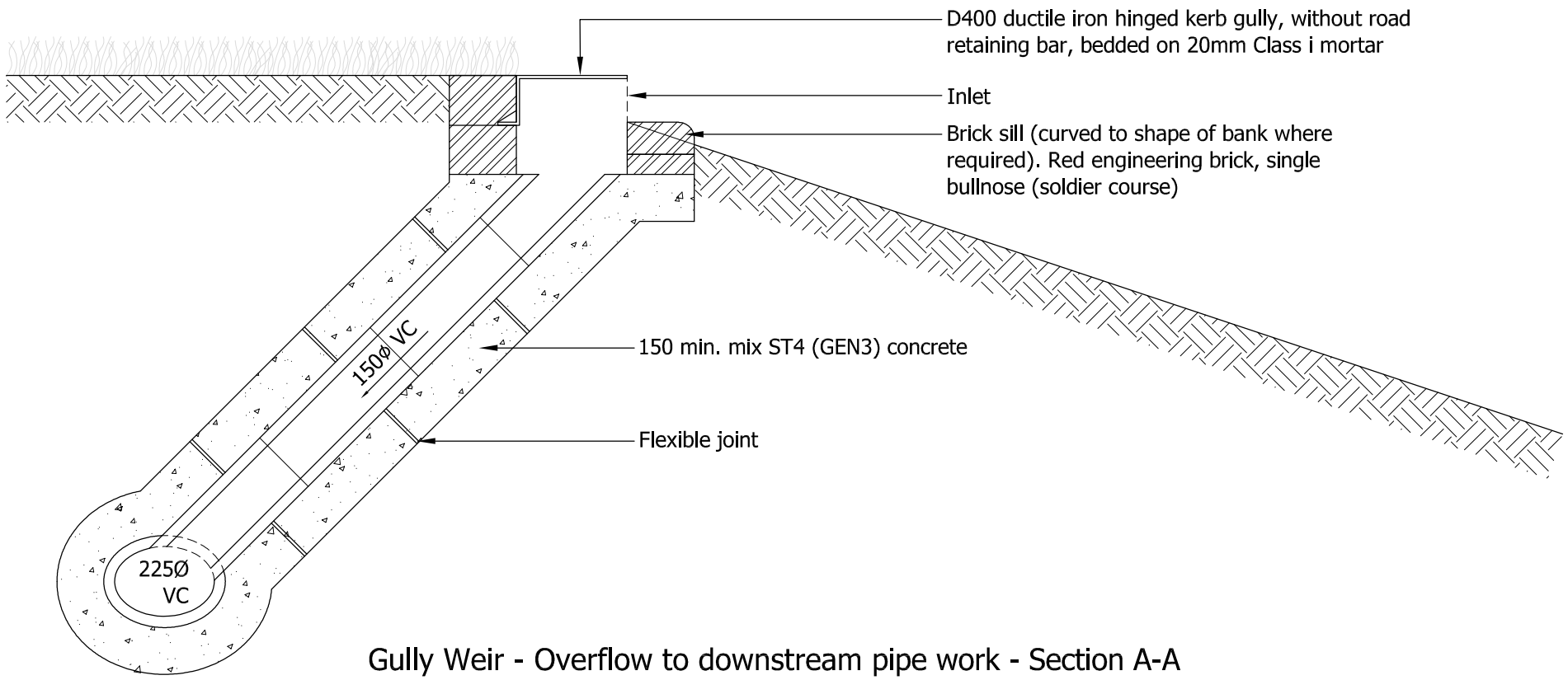

Gully Weir - Overflow to downstream pipe work - Section A-A

© Mayer Brown Limited Copyright. The drawings, information and data recorded in this document ("the information") is the property of Mayer Brown. This document and the information are solely for the use of the authorised recipient and this document may not be used, copied or reproduced in whole or part for any purposes other than which it was supplied by Mayer Brown. Mayer Brown makes no representation, undertakes no duty and accepts no responsibilities to any third party who may use or rely upon this document or the information.

A3 ORIGINAL

Notes:

1. All dimensions are in mm unless stated otherwise.
2. Surrounding landscape levels shall be above cover of gully to prevent overflows bypassing.

Berewood HAMPSHIRE

FOR APPROVAL
NOT FOR CONSTRUCTION

rev.	amendment	checked	date

mayer brown

Mayer Brown Limited Lion House
Oriental Road Woking Surrey GU22 8AR
Telephone 01483 750 508 Fax 01483 750 437
wokingoffice@mayerbrown.co.uk www.mayerbrown.co.uk

client
Investing in homes since 1912
grainger plc

project
BEREWOOD, WATERLOOVILLE
TOWN PARK PHASE 2

scale	1:20	drawn by	LS	checked by	RHA
date	JANUARY 2019	cad file	509.dwg		

title
TYPICAL GULLY WEIR DETAILS

drawing number
GTWVILLE_TP2/CD/509

rev.