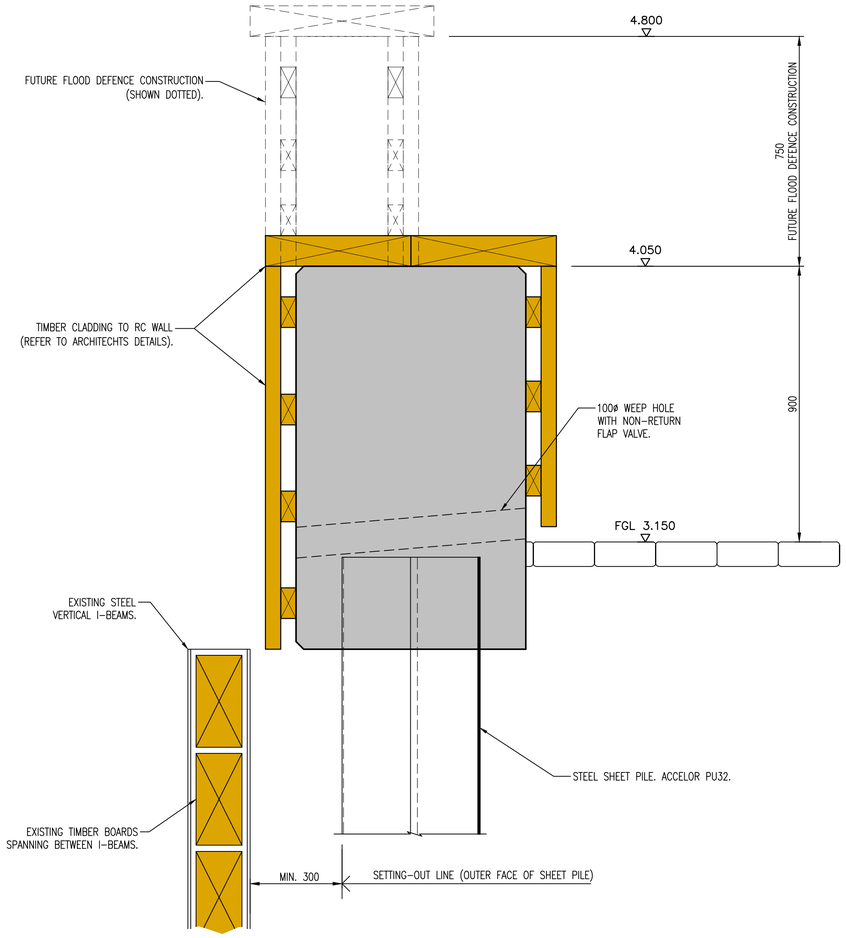

DETAIL C – TYPICAL DEFENCE WALL DETAIL.

SCALE 1:10

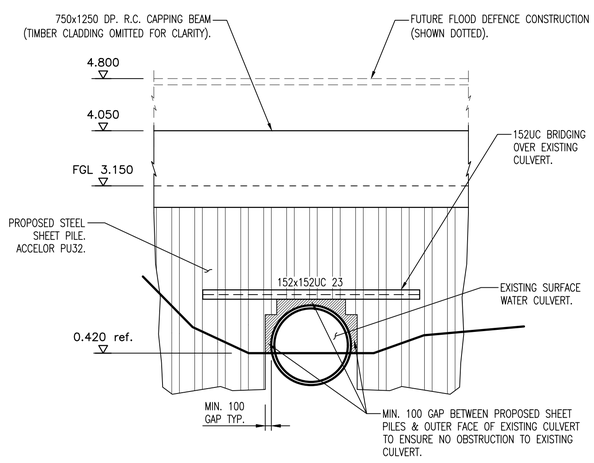

SECTION Y–Y. ELEVATION ON CULVERT.

SCALE 1:50

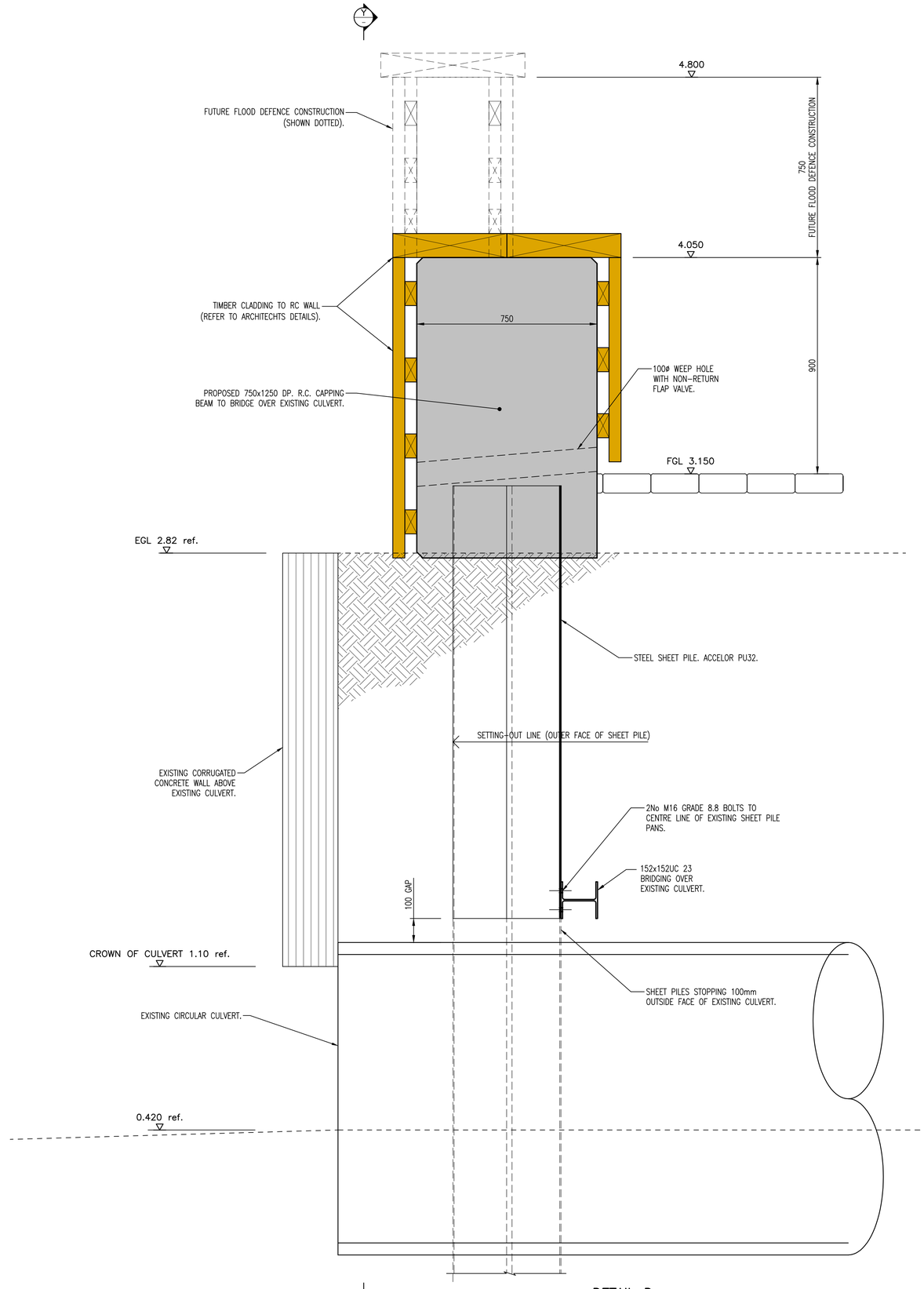

DETAIL D SECTION THROUGH EXISTING CULVERT.

SCALE 1:10

NOTES:

1. THIS DRAWING IS COPYRIGHT AND SHOULD NOT BE REPRODUCED WITHOUT APPROVAL.

2. THIS DRAWING TO BE READ IN CONJUNCTION WITH THE ARCHITECTS DRAWINGS. ANY DISCREPANCIES ARE TO BE BROUGHT TO THE ATTENTION OF BOTH PARTIES IMMEDIATELY.

3. ANY DIMENSIONS/LEVELS INDICATED 'ref.' REFER TO ASSUMED/EXISTING DIMENSIONS WHICH ARE TO BE SITE CHECKED PRIOR TO THE COMMENCEMENT OF ANY WORK.

4. CANTILEVER SHEET PILED WALL TO BE ACCELLOR PU32 SET 100mm IN FRONT OF EXISTING SEA WALL (WHERE APPLICABLE).

PRELIMINARY

Version	Amendment	Revised by and date	Checked by and date	Approved by and date
P6	PRELIMINARY	HDL/04.19	HDL/04.19	HDL/04.19
P5	PRELIMINARY	HDL/04.19	HDL/04.19	HDL/04.19
P4	PRELIMINARY	HDL/04.19	HDL/04.19	HDL/04.19
P3	PRELIMINARY	HDL/03.19	HDL/03.19	HDL/03.19
P2	PRELIMINARY	HDL/02.19	HDL/02.19	HDL/02.19
P1	PRELIMINARY	HDL/02.19	HDL/02.19	HDL/02.19

ORIGINAL DRAWING SIZE – A1

CAD REF.

X-REFS:

HAMILL DAVIES LIMITED
Consulting Civil and Structural Engineers

Client: JEREMY SAMUELS
Project: DOLPHIN QUAY, EMSWORTH
Drawing Title: FLOOD DEFENCE WALL DETAILS – SHEET 2
Purpose: PRELIMINARY
Drawn: HDL
Designed:
Scale: 1:10 @ A1
Issuing Office: SWANMORE
Telephone: 01489 893 596
Drawing Number: 18-3130-126
Version: P6