Technical drawings

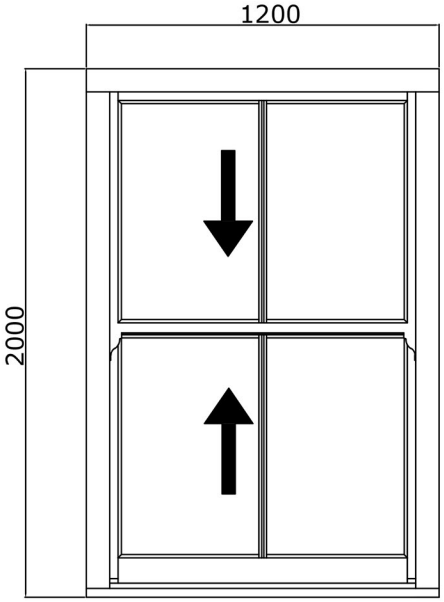

'U' value	Energy rating	Acoustic performance
1.49 W/m²K	A	-34 dB

All values are based on standard specifications, and can be altered through use of options.

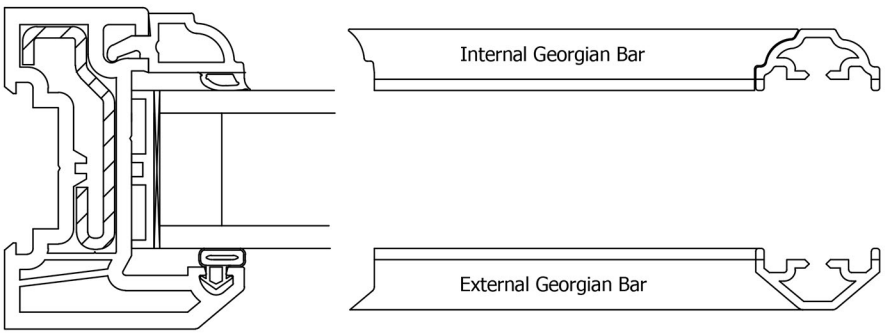

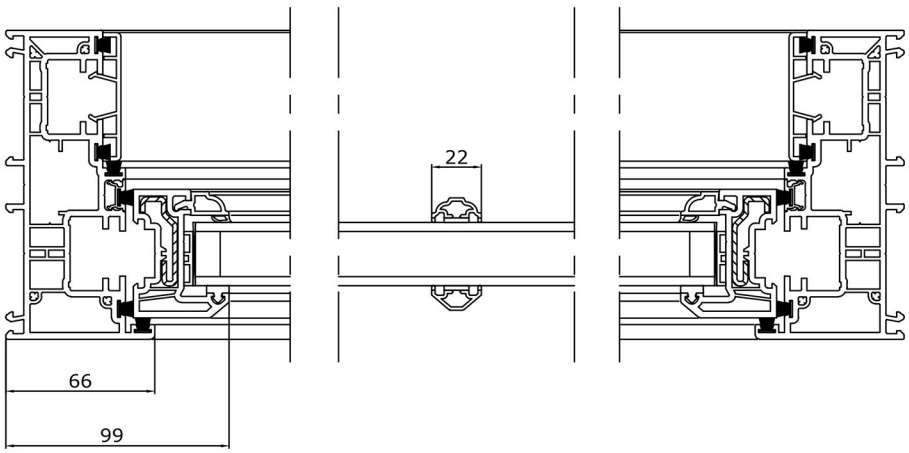

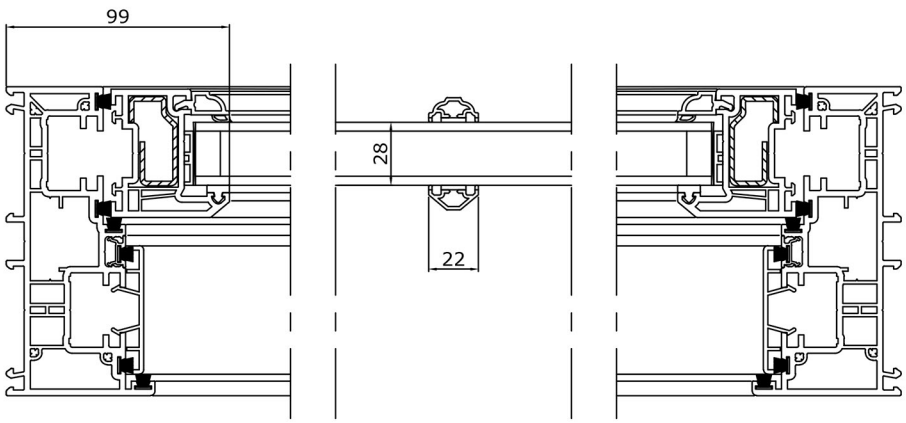

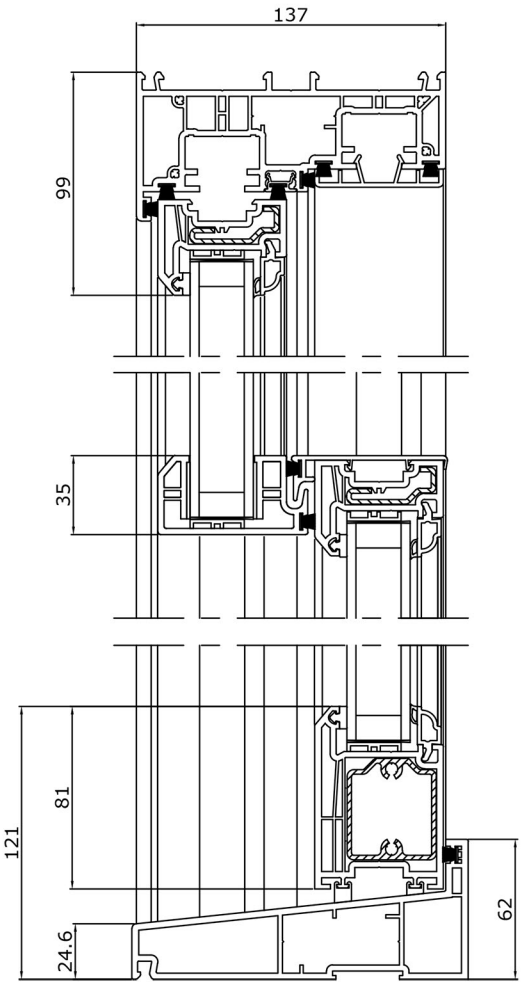

Roseview windows

35 Stilebrook Road
Olney, Bucks. MK46 5EA
phone: 01234 712657
web: www.roseview.co.uk