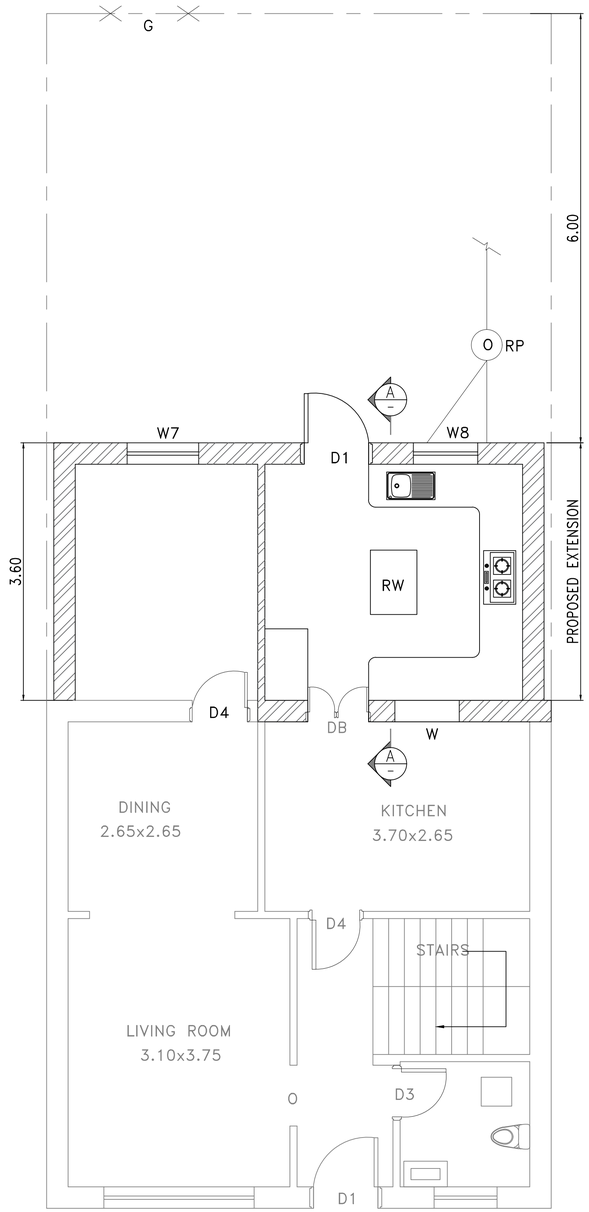

2 PROPOSED GROUND FLOOR PLAN
SCALE 1:100

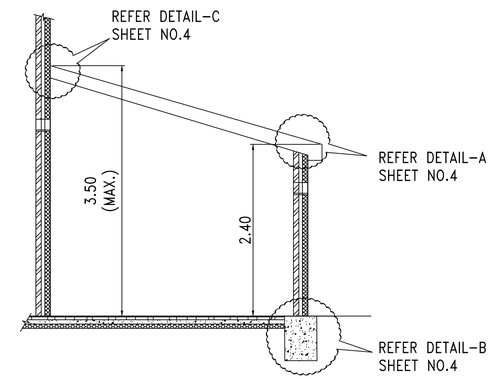

2 SECTION-AA_PROPOSED
SCALE 1:100

NOTES:

DB — DOUBLE DOOR

O : OPENING
(PREVIOUS OPENING TO BE RECONSTRUCTED)

RW : ROOF WINDOW
0.9mx0.65m (APPROX.)

PROPOSED WALL

EXISTING WALL

0 (SCALE 1:100) 5

General Notes

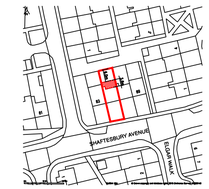

KEY PLAN

N

No.	Revision/Issue	Date
2	DRG NO:02; REV.01	28/03/2019
1	DRG NO:02; REV.00	23/03/2019

Firm Name and Address

Project Name and Address

SINGLE STOREY REAR EXTENSION.
SITE NO:85,
SHAFTESBURY AVENUE,
PO7 5UU.

Project
PROPOSED PLAN & SECTION AA

Date
23/03/2019

Scale
1:100

Sheet
02