BS5837:2012

Trees in relation to design, demolition and construction – Recommendations

Arboricultural Method Statement

Andy Grice

69 New Brighton Road,

Emsworth,

P10 7QR.

11 April 2019

Author: David Garrick FdSc. (Arb.), Tech.Arbor.A.

Table of Contents

If this report has been released electronically the appendices referred to herein can be found in the annexed zip folder/s as .pdf files. If this report has been released in hard copy the appendices will be bound into the back of this report. Plans are annexed separately as A0, A1, A2 or A3 as appropriate.

Introduction 3
Executive Summary 3
General Information 5
Tree Survey 6
Arboricultural Impact Assessment 7
Arboricultural Method Statement 9
- Tree Works 10
- Protected Species 12
- Site Management 14
- Prohibition 15
- Sequencing of works 16
- Protective Measures 17
- Demolition 22
- Construction 23
- Services 26
- Landscaping 28
- Monitoring and Supervision 29

Appendix 1: Tree Survey Schedule 31
Appendix 2: Tree Protection Notice 35
Appendix 3: Contact Details 37
Document Production Record 38

Introduction

Arbtech Consulting Limited (Arbtech) received written instruction on 14th March 2019 from Andy Grice to attend 69 New Brighton Road, Emsworth, Hampshire, PO10 7QR (Grid ref SU749067) (site) to undertake an arboricultural survey a to BS5837:2012 guidance to assess trees, hedges and major shrub groups growing on and within influencing distance of the site and to produce a Schedule of trees, Tree Constraints Plan, Arboricultural Impact Assessment , Arboricultural Method Statement and Tree Protection Plan.

Executive Summary

This report describes the extent and effect of the proposed development at the site on individual trees and groups of trees within and adjacent to the site.

Trees within the site were surveyed; using a methodology guided by British Standard 5837:2012 'Trees in relation to design, demolition and construction – Recommendations' ("BS5837").

Subsequently, this report has been produced, balancing the layout of the proposed development against the competing needs of trees. This report comprises all of the requisite elements of an arboricultural implications assessment, method statement and supporting plans.

Checklist for Submission to Local Planning Authority

Tree survey	☒
Tree constraints plan	☒
Arboricultural impact assessment	☒
Arboricultural method statement	☒
Tree protection plan	☒

This report and its appendices follow precisely the strategy for arboricultural appraisal intended to provide local planning authorities with evidence that trees have been properly considered throughout the development process.

It is the conclusion of this report that the overall quality and longevity of the amenity contribution provided for by the trees and groups of trees within and adjacent to the site will not be adversely affected as a result of the local planning authority consenting to the proposed development. It is considered that any issues raised in this report, or beyond the scope of it can be dealt with by planning conditions.

General Information

Client: Andy Grice

Site: 69 New Brighton Road, Emsworth, Hampshire, PO10 7QR.

Brief proposal description: Extension to the side & rear of the existing property an a new wider garage.

Planning application reference: APP/19/00180

Table 1: Documents referred to.

Document	Reference No.
Topographical survey drawing	S1107
Proposed layout drawing	601-102
Landscape master plan drawing	N/A
LPA pre-app comments	N/A
British Standard 5837:2012	“BS5837”
Arboricultural Impact Assessment	Arbtech AIA 01
Tree Protection Plan	Arbtech TPP 01

Tree Survey

Survey: An arboricultural survey to BS5837 of all trees within impacting distance of the site was undertaken by David Garrick of Arbtech Consulting on 29th March 2019.

A total of 12No individual trees, 2No groups of trees and 2No hedges were surveyed. Details for each of the trees surveyed are provided in the Schedule of Trees (see Appendix 1)

Table 2: Documents upon which this tree survey has been based

Document	Originator	Reference Number	Title
Topo	Medlams Surveys	S1107	Topo Survey

Limitations: The survey was made at ground level using visual observation only. Detailed examinations, such as climbing inspections and decay detection equipment were not employed, though may form part of the survey's management recommendations. Measurements were taken using specialist tapes, laser and GPS devices. Where this was not possible, measurements are estimated.

Scope: Pre-development tree surveys make arboricultural management recommendations based exclusively upon the individual tree or group of trees condition relative to their present context (*i.e. not in relation to the proposed development*).

Legal Status: No statutory protection check has been performed. BS5837 does not draw any distinction between trees subject to statutory protection, such as a Tree Preservation Order ("TPO"), and those trees without. This is principally because a detailed planning consent overrides any TPO protection. Consequently, we do not seek to offer any comparison between or infer any difference in the quality or importance of TPO trees and other trees.

* For more information on the surveyed trees please see Arbtech Consulting Ltd, Tree Survey Schedule (Appendix 1), Tree Survey Report and Tree Constraints Plan.

Arboricultural Impact Assessment

Table 3: Documents upon which this assessment has been based.

Document	Originator	Reference Number	Title
Topo	Medlams Surveys	S1107	Topo Survey
Site Plan	Pullen Architecture	601-102	Site Plan

There are a number of issues that may need to be addressed in an arboricultural impact assessment between the trees and the proposed development, these are as follows:

- The effect and extent of the proposed development within the root protection areas (RPAs) of retained trees;
- The potential conflicts of the proposed development with canopies of retained trees; and
- The likelihood of any future remedial works to retained trees beyond which would have been scheduled as a part of usual management.

Table 4: Impacts upon the RPAs of retained trees.

Tree	**Species**	**Incursion**	**RPA (m^2)**	**Incursion (m^2)**	**Incursion (%)**
5	Ash	Garage	282.4	9.99	3.5%
6	Oak	Garage	275.3	21.78	7.9%

These impacts can be seen on the Arboricultural Impact Assessment drawing number Arbtech AIA 01.

Trees to be removed

The total number of trees to be removed for this scheme in 2No. individual and 1No hedges as a part of this development.

A breakdown of all tree removals and pruning works can be seen in Table 8: Summary of Tree Works

Table 5: Number of individual trees to be removed.

U	A	B	C
0	0	0	1

Table 6: Number of groups (hedges) to be removed.

U	A	B	C
0	0	0	0 (1)

Canopy cover is ecologically important and the loss of canopy cover by this tree will be mitigated with planting within the development.

Conclusion

I see no arboricultural or landscape reasons why the new development (Side & rear extension of property and new garage) should not proceed subject to the appropriate conditions

Arboricultural Method Statement

The purpose of this method statement is to demonstrate how any aspect of the development that has potential to result in loss or damage to a tree may be implemented and provide an adequate level of protection for those trees that are to be retained during the proposed works.

Details of key site personnel, including site / project manager will be submitted to the Council's Tree Officer prior to the commencement of site works.

This method statement is to be approved and agreed to in writing by all key personnel prior to the commencement of site works.

No site personnel are to be present and no demolition, site clearance, building work or delivery of materials is to occur until the protective measures are in accordance with this method statement and the Tree Protection Plan drawing number Arbtech TPP 01.

Protective measures should be in accordance with this method statement and the Tree Protection Plan; drawing number Arbtech TPP 01 will remain unaltered and in situ, unless otherwise specified, for the entire duration of the construction.

Table 7: Documents upon which this assessment has been based.

Document	Originator	Reference Number	Title
Topo	Medlams Surveys	S1107	Topo Survey
Site Plan	Pullen Architecture	601-102	Site Plan

Tree Works

For reasons of public safety, all tree works referred to herein must be carried out prior to any site personnel commencing works or any building materials being delivered.

Table 8: Summary of Tree Works

No.	Species	Works	Category
10	Prunus	Fell & remove stump	C1
11	Fig	Fell & remove stump	C1
H1	Bay	Fell & remove stumps	C2

Notes

All tree work is to be undertaken in accordance with British Standard BS 3998:2010, Recommendations for tree work. All arising's are to be removed and the site is to be left as found. Care is to be taken of the ground around retained trees to make sure that it does not become compacted as a result of tree surgery operations. No equipment or vehicles such as timber Lorries, tractors, excavators or cranes shall be parked or driven beneath the crowns of any retained trees, to prevent subsequent compaction and root death.

Tree removal

A tree should be felled in one piece only when there is no significant risk of damage to people, property or protected species (see Annex A).

Where restrictions (e.g. lack of space, buildings, other features, land ownership or use, or other trees which are to be retained) cannot be overcome, trees should be dismantled in sections.

This also applies where a tall stump is being retained but where branches are to be removed/pruned.

Extensively decayed trees can be unpredictable when they are being felled, and special precautions should therefore be taken, such as the use of a winch to guide the direction of fall.

Stump removal – stump grinding

Stump grinding should be to a minimum of 300mm deep or to extend through the base of the stump leaving the major roots disconnected if the intention is to reduce the potential for the spread of Honey fungus.

The grinding residue should be treated as arising's and removed from site.

NOTE Mechanical destruction of a stump by stump grinding is less disruptive to the site than digging out.

The hole left by stump removal, should be filled with soil or other material. The filling should be appropriate for future site usage, and for any surface treatment that is to be installed.

Where future plant growth is desired, the backfill material should be firmed in 150 mm layers by treading, avoiding excessive compaction and destruction of the soil structure.

Stump removal - digging

Stump removal by digging out should include disposal/utilisation of woody material (see Clause **13**).

NOTE Whether done by hand or machine, digging out can cause severe disturbance of the site.

Where possible, when winching out a stump, a ground or other type of anchor should be used rather than a tree to be retained. If there is no alternative to using such a tree as an anchor, appropriate protective measures should be adopted.

After stump removal

The hole left by stump removal, whether by digging out or grinding, should be filled with soil or other material. The filling should be appropriate for future site usage and for any surface treatment that is to be installed.

Where future plant growth is desired, the back fill material should be firmed in 150mm layers by treading, avoiding excessive compaction and destruction of the soil structure.

Cut Ivy

Cutting of ivy is to be undertaken using hand tools such as hand saws or secateurs to prevent damage to the bark of the tree; the use of chain saws is prohibited. A 300mm high section of ivy is to be cut and removed from within 1m of ground level.

Protected Species

Conservation Status of British Bats

The general consensus in Britain and Europe is that virtually all bat species are declining and vulnerable. Our understanding of population status is poor as there is very little historical data for most bat species. Certain species, such as the horseshoe bats, are better understood and have well documented contractions in range and population size.

Given this general picture of decline in UK Government within the UK Biodiversity Action Plan has designated five species of bats as priority species (greater and lesser horseshoe bats, barbastelle, Bechstein's and pipistrelle). These plans provide an action pathway whereby the maintenance and restoration of the former populations levels are investigated.

Legal Status of British Bats

Given the above position all British bats as well as their breeding sites and resting places enjoy national and international protection.

All bat species in the UK are fully protected under the Wildlife and Countryside Act 1981 (as amended) through inclusion in Schedule 5. All bats are also listed on Annex IV (and some on Annex II) of the EC Habitats Directive giving further, European protection. Taken together the act and Conservation of Habitats and Species Regulations 2012 (as amended)* make it an offence to; intentionally or deliberately kill, injure or capture (take) bats;

- Deliberately disturb bats (whether in a roost or not);
- Damage, destroy or obstruct access to bat roosts;
- Possess or transport a bat or any part of a bat, unless acquired legally;
- Sell, barter or exchange bats, or parts of bats

The legislation although not strictly affording protection to foraging grounds does protect roost sites. Bat roosts are protected at all times of the year whether or not bats are present. Any disturbance of a roost due to development must be licenced.

**the regulations that delivered by the UK's commitments to the Habitats Directive.*

Breeding birds

All nesting birds are protected under the Wildlife and Countryside Act (as amended) 1981, which makes it an offence to intentionally kill, injure or take any wild bird or take, damage or destroy its nest whilst in use or being built, or take or destroy its eggs. Furthermore a number of birds enjoy further protection under that Act and are listed on Schedule 1 of the Act. These further protected birds are also protected from disturbance and it may be necessary to operate “no-go” buffer zones around such nests – typically out to 100m.

Planning policy guidance on the treatment of species identified as priorities under the biodiversity action programme suggests that local authorities should take measures to protect the habitats of these species from further decline through policies in local development documents and should ensure that they are protected from the adverse effects of development, where appropriate, by using planning conditions or obligations. The conservation of these species should be promoted through the incorporation of beneficial biodiversity designs within developments.

Site Management

The site manager will be responsible for briefing and inducting all personnel who will be working on any stage of this development and especially those who will be working within or adjacent to the canopies or RPAs of retained trees; and will make them aware of, and provide a copy of this method statement and tree protection plan drawing number Arbtech TPP 01; this is to include but not exclusively of the movement and or operation of plant, excavations, unloading deliveries, mixing and or pouring of cement and concrete.

The site manager will be responsible for the day to day running and protection of all retained trees and for liaising with the project arborist about any tree related matters and prior to any works that may or will affect the RPAs or canopies of retained trees; this is to include but not exclusively the movement and or operation of plant, excavations, unloading deliveries, mixing, pouring and storage of all caustic materials that may cause harm to retained trees.

Any incidents of damage to retained trees or of tree protection measures will be documented by the site manager who will then report these incidents to the project arboriculturist immediately and make sure that works within this area cease until the project arborist has had an opportunity to inspect the damage and where appropriate, agree a mitigation plan with the local planning authority tree officer.

The site manager may designate another person to take charge of briefing and inducting process of new site personnel or visitors in his absence.

If the site manager is replaced or is absent from site for more than three consecutive working days the project arborist will be informed and a pre start meeting will be held with the new or acting site manager.

It is the responsibility of the site manager to ensure that the planning conditions attached to the planning consent are adhered to at all times and that a monitoring regime and supervision of any works within or adjacent to the RPAs are adopted.

If at any time pruning works are required other than those previously approved, permission must be sought from the LPA tree officer and once permission is granted they are to be carried out by a suitably qualified person in accordance with BS3998:2010 Tree work – Recommendations.

Prohibition

- Mechanical digging or scraping is not permitted within a defined root protection area or within areas cordoned off by protective barrier fencing.
- No access will be permitted within the protected areas;
- No materials, equipment or debris will be stored within any of the fenced areas, or against the fencing;
- Fires are not permitted within 10m of any vegetation.
- Leaning objects against or attaching of objects to a tree is not permitted.
- Machinery, plant and vehicles are not permitted to be washed down within 10m of vegetation.
- Chemicals and materials are not to be transported, stored, used or mixed within a root protection area or within areas cordoned off by protective barrier fencing.
- Cement silos, mixing site to be situated within a bunded area to prevent pillage/leaking of chemicals harmful to trees. These areas are to be sited well clear of protected trees.
- Refuelling of plant or machinery is prohibited within 10m of the construction exclusion zones.
- It is essential that allowance should be made for the slope of the ground so that damaging materials such as concrete washings, mortar or diesel oil cannot run towards trees.
- Where machinery is to be used within 5m of retained tree canopies a banks man will be required at all times whilst setting up, moving or operating within this distance of retained trees canopies.
- Storage of all caustic material and chemicals are to be situated well clear of protected areas and preferably on lower ground if slopes are present, or to be situated within a bonded area to prevent any spills or leaks entering the ground.

Sequencing of works

A logical sequence of events is to be observed and shall be phased as follows.

Table 9: Sequence of Events

Stage	Event
Stage 1	Pre-commencement site meeting
Stage 2	Carry out tree works as specified within the summary of tree works
Stage 3	Installation of protective measures in accordance with the approved tree protection plan
Stage 4	Installation of haul road and site set up
Stage 5	Undertake site investigations
Stage 6	Undertake and complete construction works
Stage 7	Undertake external landscaping works outside of the construction exclusion zones
Stage 8	Removal of all machinery and materials form site
Stage 9	Dismantle and removal of protective measures
Stage 10	Undertake external landscaping works within the construction exclusion zones
Stage 11	Sign off from project arboriculturist

Protective Measures

Protective measures are to be installed immediately following the completion of the tree works, and are to be sited and aligned in accordance with the tree protection plan (Arbtech TPP 01) prior to the commencement of any works or the introduction of any machinery or material to site.

Upon installation of the protective measures around the retained trees the project arboriculturist will visit the site to inspect and document the position and specifications of the protective measures.

In the event that the protective measures and their positions do not comply with this arboricultural method statement document number Arbtech AMS 01 (11/04/2019) and tree protection plan drawing number Arbtech TPP 01, the project arboriculturist shall inform the client and fencing contractor so adjustments can be made.

When the protective measures comply with document number Arbtech AMS 01 (11/04/2019) and tree protection plan drawing number Arbtech TPP 01, the project arboriculturist will sign off the protective measures in writing to the client and will send a copy to the fencing contractor, site agent and local authority tree officer.

If the protective measures become damaged or there is any accident or emergencies involving trees, these areas are to be cordoned off immediately with high visibility plastic mesh fencing. The site agent is to photograph and document the damage and inform the project arboriculturist immediately after the incident and all work within in this area is to cease until the project arboriculturist has made a visit to the site. Any and all damaged sections of protective measures shall be replaced within 48 hours of the initial incident.

The protected area is sacrosanct and will not be invaded by the storage of materials, mixing of concrete or other products, accessed by machinery, equipment or pedestrians or in any other way disturbed by construction activity.

The protective measures will remain in place until the completion of stage 8 (see Sequencing of Works), thereafter they will be carefully dismantled only with the agreement of the project arboriculturist and or the local authority tree officer.

The existing site boundary measures are to be retained for the duration of the development. If for any reason the existing boundary measures are not to be used protective barrier fencing is to be installed along the line of the boundaries and is only to be removed upon the written permission of the project arboriculturist or LPA tree officer upon the completion of the development or immediately prior to the installation of the permanent boundary measures.

No equipment, vehicles or plant shall operate beyond the tree protection fencing. Booms, hoists and rigs should be kept as far away from the canopies of retained trees at all times. Where it is necessary to operate within 5m of a tree canopy, it will be done with the utmost caution and under the control of a banks man. Damage to trees will be considered a breach of this tree protection plan, which in turn could be a breach of planning permission.

Protective Barrier Fencing

Protective barrier fencing should be appropriate for the intensity and proximity of the development to protect trees where development activity is in close proximity.

Default specification: To comprise either 2.4m wooden site hoarding; or a 2.3m high scaffold framework, well braced to resist impacts, with uprights to be spaced at a maximum of 3.0m intervals and driven into the ground by a minimum of 600mm. On to this, standard anti-climb welded mesh panels are to be securely fixed to each other with at least two scaffold clamps and to the scaffold frame work with wire.

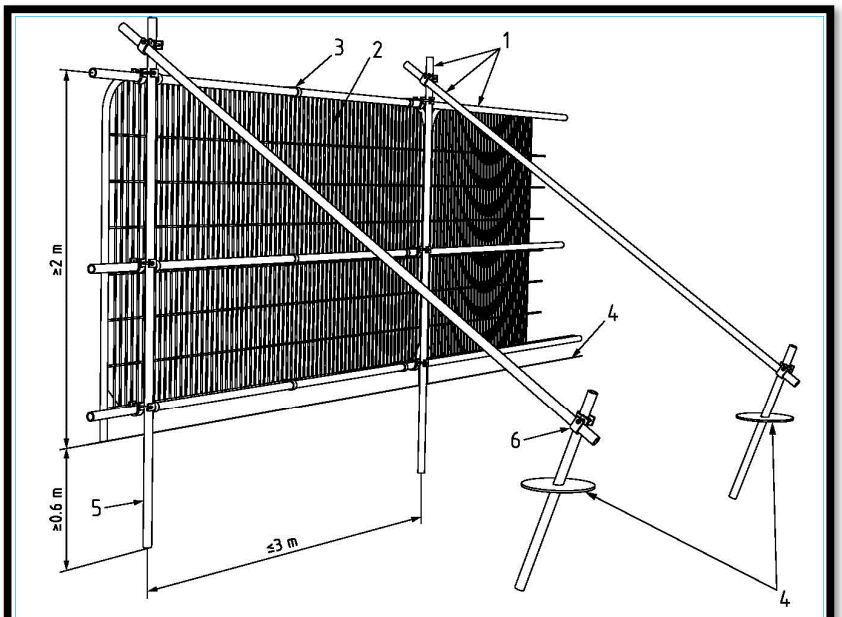

Key
1 Standard scaffold poles
2 Heavy gauge 2 m tall galvanized tube and welded mesh infill panels
3 Panels secured to uprights and cross-members with wire ties
4 Ground level
5 Uprights driven into the ground until secure (minimum depth 0.6 m)
6 Standard scaffold clamps

Secondary specification: To comprise of 2m tall welded mesh panels on rubber or concrete feet. Panels are to be joined together using a minimum of two anti-tamper couplers, installed so that they can only be removed from inside the fence. The panels

should be supported on the inner side by stabiliser struts, which should be attached to a base plate and secured with ground pins.

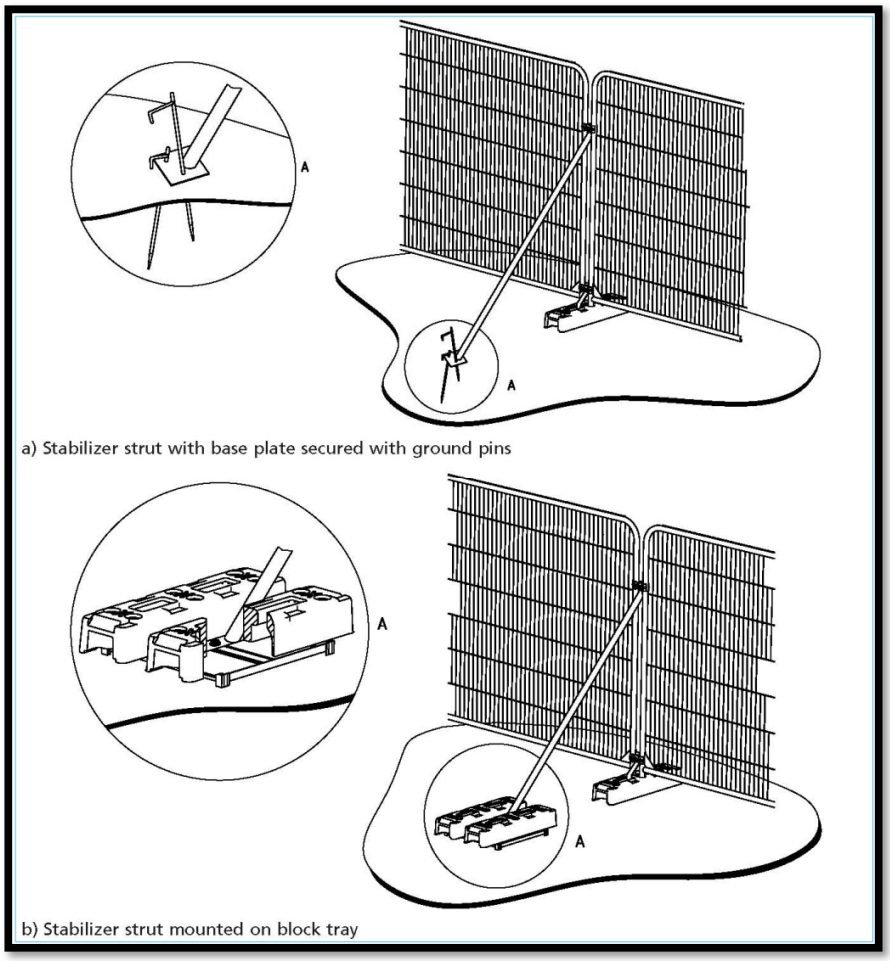

Signage denoting the words "*tree protection area*" at 5.0m intervals should be fixed to the protective barrier fencing (See Appendix 2).

Protective fencing and Trunk protection is to be removed ONLY with the written permission of the arboricultural consultant and approval of the local planning authority (LPA).

Trunk Protection

Protective trunk wrapping:

Protective trunk wrapping is to comprise of a minimum of three wrappings of clean dry hessian around the trunk from ground level up to 2.4m high and held in place with sisal. Onto the hessian there is to be a minimum of three wraps of chestnut paling around the trunk; the chestnut paling is to be held in place by 2.50mm galvanized mild steel wire at the top, middle and bottom of each wrap of chestnut paling. The wire is to be secured to the chestnut paling by fencing staples; Or

Protective barrier hoarding:

Protective barrier hoarding should be appropriate for the intensity and proximity of the development to protect trees where development activity is in close proximity. To comprise of 2.4m high wooden site hoarding constructed upon a timber frame work situated around the outside of the planting pit. Where the timber frame is constructed around the tree trunk a minimum of four layers of clean dry hessian is to be wrapped around the trunk to protect the bark.

Trunk protection is to be removed ONLY with the written permission of the arboricultural consultant and approval of the local planning authority (LPA).

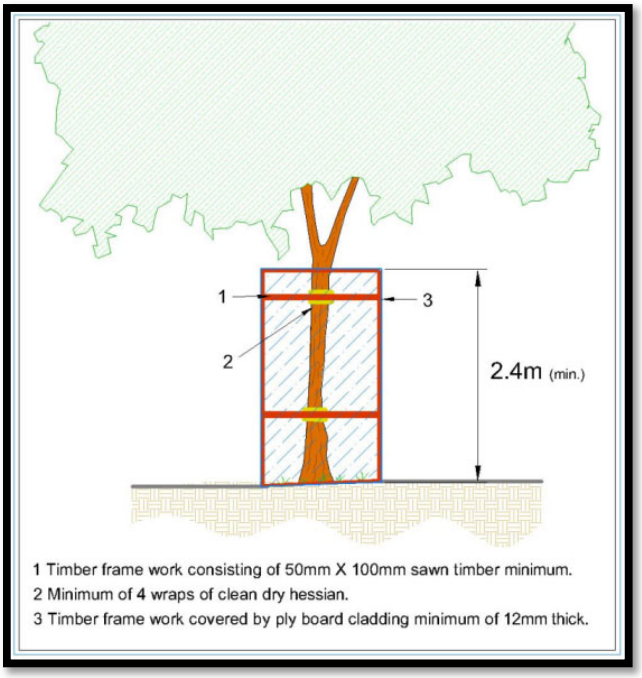

Protective barrier hoarding

Ground boarding

New temporary ground protection should be capable of supporting any traffic entering or using the site without being distorted or causing compaction of underlying soil.

Where determined by the project engineer that the hard surfacing is not adequate protection from any expected loading, ground boarding is to be installed to the engineers specification on top of the hard surfacing within the root protection areas of retained trees.

Where machinery will be stored or used from the ground boarding within the RPAs of the retained trees an impervious barrier and or bunding to prevent oils, fuel or chemicals is to be installed to prevent leaching into the soil within or adjacent to the RPAs.

Note The ground protection might comprise of one of the following:

a) for pedestrian movements only, a single thickness of scaffold boards placed either on top of a driven scaffold frame, as to form a suspended walkway, or on top of a compression-resistant layer (e.g. 100mm depth of woodchip), laid onto a geotextile membrane;
b) for pedestrian-operated plant up to a gross weight of 2t, proprietary inter-linked ground protection boards placed on top of a compression-resistant layer (e.g. 150mm depth of woodchip), laid onto a geotextile membrane;
c) for wheeled or tracked construction traffic exceeding 2t gross weight, an alternative system (e.g. proprietary system or pre-cast reinforced concrete slabs) to an engineering specification designed in conjunction with arboricultural advice, to accommodate the likely loading to which it will be subjected.

For any situations other than those described in a) or b) (as above), the ground boarding is to be designed by a suitably qualified person to an engineering specification in conjunction with arboricultural advice, to be suitable of supporting the expected loading to be placed upon it.

In all cases, the objective of the ground boarding is to avoid compaction of the soil beneath, so that tree root functions remain unimpaired.

Demolition

Prior to the demolition of the existing site features, all tree works are to have been completed, tree protection measures are to be in place as per Arbtech Consulting Ltd. tree protection plan document number Arbtech TPP 01 and have been signed off and a copy of the demolition method statement has been submitted and approved by the project arboriculturist and LPA tree officer, to ensure that there is no conflict with this method statement.

All demolition work within or immediately adjacent to RPAs or canopies of retained trees is to be undertaken under the direct on-site supervision of an arboriculturist.

Construction

Prior to the construction of the proposed side & rear extension and new garage, a copy of the construction method statement should have been submitted and approved by the project arboriculturist and LPA tree officer, to ensure that there is no conflict with this method statement.

All excavations and construction work within or immediately adjacent to RPAs or canopies of retained trees is to be undertaken under the direct on-site supervision of an arboriculturist.

Foundations design

New foundations for buildings, structures and hard surfacing situated within the RPAs of retained trees are to be designed in conjunction with arboricultural advice to accommodate the likely loading of the structure. The foundations will be been designed to limit the amount of excavation required within RPAs to retain roots that are important to the trees stability as identified during the site investigations.

The use of strip foundations within RPAs of retained trees can cause extensive root loss and as such are to be avoided.

Design of foundations for the new garage within the RPAs of trees numbers 5 & 6 are to be designed to minimise the adverse impact upon trees and should pay particular attention to the existing ground levels and proposed finished floor level. Foundation design should be undertaken using site specific information in conjunction with the project arboriculturist and engineer.

Root damage can be minimised using:

- Piles, with a site investigation it is possible to determine their optimal location whilst avoiding damage to roots important for the stability of the tree. Investigative excavations are to be undertaken with the use of hand tools or compressed air displacement to a minimum depth of 600mm;
- Beams laid at or above ground level and or cantilevered as necessary to avoid tree roots identified by the site investigation
- Multi-dimensional confinement systems.

These are just an example of a few types of foundations that can be used to minimise root damage. In order to arrive at a suitable solution, site specific and specialist advice regarding foundation design should be sought from the project arboriculturist and engineer.

Where piling is to be installed near to trees, the smallest practical pile diameter should be used, as this reduces the possibility of striking major tree roots and reduces the size of the rig requires to sink the piles. If a piling mat is required, this should conform to the specification for ground boarding.

All and any excavations that may be required for foundations within the RPAs of retained trees will initially be undertaken manually under arboricultural supervision (see Manual excavation).

Garage

Arbtech Consulting Limited have not been informed of the type of foundation that will be used, the foundations should be designed in conjunction with arboricultural advice following trial excavations to find suitable locations for the piles using the smallest suitable pile size minimum number required.

Table 11: Impacts upon RPAs of retained trees – Garage

Tree	Species	Incursion	RPA (m²)	Incursion (m²)	Incursion (%)
5	Ash	Garage	282.4	9.99	3.5%
6	Oak	Garage	275.3	21.78	7.9%

Any piling rig should be situated outside of any RPAs of the retained trees or on top of ground boarding designed by the project engineer capable of dealing with the likely loading; all piles to be installed within the RPAs of trees numbers 5 & 6 are to be installed under arboricultural supervision directly through the ground boarding which may only be removed upon completion of the installation of the pile foundation.

Patio

The new patio is situated entirely outside of the RPAs of retained trees and as such can be installed using traditional building techniques if required

Manual excavation

Excavation within RPAs will be undertaken by hand under direct on-site arboricultural supervision of the required depth of the foundation; Or to a minimum of 600mm deep of any excavation, whether for proposed foundations, hard surfacing or underground services. The total depth of the manual excavation will be determined by the arboriculturist whilst on site.

The soil is to be loosened with the aid of a fork or pick axe and then cleared with the aid of an Air-spade, Air-vac and or shovel. Any roots found will be cleanly severed by the arboricultural consultant with either a hand saw or secateurs.

Any roots found with a diameter of less than 25mm shall be cleanly severed by the arboricultural consultant. Any roots of 25mm and above shall be excavated around without damaging them; the arboricultural consultant shall decide if it's feasible or necessary to retain the root, if not it shall be severed.

The edge of the excavation closest to the trees will be covered with damp hessian to prevent soil collapse or contamination by concrete.

Soil beneath the depth may be sheet piled, regular piled or excavated deeper. Machinery may be used for this providing that it is situated outside of the RPA or has appropriate ground protection in place to move around on and work upon.

Services

Detailed drawings of proposed underground services are not available at this time; hence it is not possible to identify any specific potential impacts associated with the scheme at this stage.

Existing services within the site should be retained where ever possible. Where existing services within RPAs require upgrading, the upmost care must be taken to minimise disturbance, and where feasible trenchless techniques are to be employed, and only where necessary should open excavations be considered.

Where new services are to be introduced into the site they should be located outside of RPAs, where they will not interfere with tree roots. If any excavations are required within the RPAs all trenches are to be excavated by hand and radially to the tree trunks under direct on-site arboricultural supervision and are to be carried out under NJUG guidelines.

Final positions of any proposed services should be verified and approved by the arboricultural consultant and local authority tree officer before implementation.

New Underground services

Trenching for installation of underground services and drainage routes could sever any roots that may be present and as such adversely affects the health of the tree. For this reason particular care should be taken in routing and methods of installation of all underground services. All underground services and drainage routes should be located so that no excavations are required within RPAs.

Where it has been impossible to keep underground services from passing through RPAs or within close proximity to trees, these sections are to be installed in one of three ways in accordance with the guidance set out in National Joint Utilities Group guidelines (NJUG 4), under on site arboricultural supervision.

Trenchless Techniques

There are three main types of trenchless techniques, these include, guided and unguided boring and pipe replacement by lining or bursting. These allow for the installation, maintenance or renewal of underground services, without the disturbance of soil in which roots are likely to be growing. Starting and receiving pits for the boring machinery are to be located outside of the RPAs of any retained trees, with the bore depth being maintained at a minimum depth of 600mm below the existing ground level.

Techniques involving external lubrication of the equipment shall use no material other than water as other lubricants could contaminate the soil (e.g. oil, bentonite, etc.).

Manual Excavation

Excavation within RPAs will be undertaken by hand under direct on-site arboricultural supervision of the required depth of the foundation; Or to a minimum of 600mm deep of any excavation, whether for proposed foundations, hard surfacing or underground services. The total depth of the manual excavation will be determined by the arboriculturist whilst on site.

The soil is to be loosened with the aid of a fork or pick axe and then cleared with the aid of an Air-spade, Air-vac and or shovel. Any roots found will be cleanly severed by the arboricultural consultant with either a hand saw or secateurs.

Any roots found with a diameter of less than 25mm shall be cleanly severed by the arboricultural consultant. Any roots of 25mm and above shall be excavated around without damaging them; the arboricultural consultant shall decide if it's feasible or necessary to retain the root, if not it shall be severed.

The edge of the excavation closest to the trees will be covered with damp hessian to prevent soil collapse or contamination by concrete.

Soil beneath the depth may be sheet piled, regular piled or excavated deeper. Machinery may be used for this providing that it is situated outside of the RPA or has appropriate ground protection in place to move around on and work upon.

Broken Trench – Hand Dug

This technique combines both trenchless techniques and manual excavation where excavation is unavoidable. Excavations should be limited to where there is clear access around and below the roots. All trenches shall be excavated by hand with the same precautions taken as for manual excavation. Open section of trench should only be large enough to allow access for linking to the next section.

Landscaping

Any tree planting should take into consideration the available space for tree growth and development in order to ensure the trees are physically suited to the site at maturity. A specification for and notation relating to the precise alignment of replacement trees will be contained in the landscape proposals.

Landscaping around retained trees may only be carried out once all tree protection measures have been removed (planting, turfing, fencing etc.).

All excavations within the Root Protection Areas shall be undertaken by hand and without reducing current ground levels unless it is agreed in writing with the LPA. At no time is the use of a rotavator permitted within the RPAs of retained tree.

Any tree roots discovered will be left in-situ and shall not be cut or otherwise damaged. Where possible, the soil structure within the Root Protection area shall be preserved.

No works will be carried out within the RPAs of any trees if the soil moisture is of such a level that soil compaction may be likely. Should the soil become compacted or has poor structure which would hinder the development of the existing trees and plants or any new plantings the arboriculturist should be consulted about soil decompaction techniques.

Monitoring and Supervision

Where trees have been identified within this method statement and tree protection plan drawing number Arbtech TPP 01 for retention, there should be an auditable system of arboricultural monitoring. This is to extend to arboricultural supervision whenever demolition or construction activity is to take place within or adjacent to any canopy or RPA.

The development's tree protection measures are to be monitored and all demolition and construction works to be undertaken within or adjacent to the RPAs of retained trees are to be supervised by project arboriculturist, who should be retained to record and report observations to the council at appropriate intervals.

Pre-commencement site meeting

Prior to the commencement of any works or machinery and materials arriving on site a pre-commencement site meeting involving the project arborist, land owner or agent, site manager, contractors and engineer (as appropriate) and the relevant LPA officers will be held to ensure that all aspects of the arboricultural method statement and tree protection are understood and for all parties to swap contact details (see Appendix 3).

Monitoring and supervision schedule

The initial monitoring visit will be to check that the tree protective measures are in the correct location and as specified within the approved method statement; if so to sign off their installation.

There after monitoring visits are to take place at regular intervals, to ensure that tree protection measures are in place and are functioning as designed or whenever necessary to undertake works to be carried out under arboricultural supervision. The frequency of the monitoring visits is to be determined with the LPA tree officer at the pre-commencement site meeting.

A record of all arboricultural monitoring and supervision visits will be kept and any faults will be logged, this will then be copied to the site agent, developer and local planning authority in a digital format.

If during the course of the development it is necessary for areas to be re-designed so that they would require changes to the approved arboricultural method statement or tree protection plan and so affecting retained trees the project arborist and LPA tree officer will be invited to attend a site meeting with all relevant parties. Prior to any changes being implemented these must have been approved in writing by the LPA tree officer.

Supervision

The arboricultural consultant will be required to attend site to directly supervise all demolition and construction works that are to be undertaken within or adjacent to the RPAs of all retained trees and will be advised a minimum of 72 hours prior to the commencement of any works that require his attendance, these will include:

1. Pre-commencement site meeting;
2. Location of protective measures;
3. Manual excavation of site investigations;
4. Manual excavation of foundations within RPAs of tree nos.5 & 6.
5. Any excavations within and immediately adjacent to RPAs, including foundations, hard surfacing or underground services;
6. Removal of protective measures.
7. Project sign off as compliant with Arboricultural Method Statement

Completion meeting

Once all construction works have been completed all materials and machinery has been removed from site the project arborist shall be informed and will invite the LPA tree officer to meet on site to discuss the process and discuss any final remedial works that may be required and to sign the development off so that the protective measures may be removed.

Appendix 1: Tree Survey Schedule

BS5837:2012 Tree Survey

Arbtech Consulting
Unit 3 Well House Barns
Chester Road
Chester
CH4 0DH
Phone: 01244 661170
https://arbtech.co.uk

Client: A Grice
Project: 69 New Brighton Road, Emsworth, Hampshire, PO10 7QR
Survey Date: 29/03/2019
Surveyor: David Garrick

ARBTECH

Tree and Tag No / Species	Hght (m)	Stems No	Stems Ø (mm)	Crown Spread (m)	Crown Clear (m)	Age	RP A (m²) R (m)	Phys Condition	Structural Condition	Preliminary Recommendations / Survey Comment	Cat ERC
G1											
Various	8	1	250	N 3	2	M	A: 28.3	Fair	C: Fair	Group of 4 trees along property boundary, species include ash, yew, bay.	B.2
				E 3	2		R: 3		S: Good		20 to 40 yrs
				S 3	2				B: Good		
				W 3	2						
G2											
Various	8	1	250	N 4	1	SM	A: 28.3	Good	C: Fair	10 trees, predominantly bay with rhododendron & maple.	B.1.2
				E 4	1		R: 3		S: Good		20 to 40 yrs
				S 4	1				B: Good		
				W 4	1						
H1											
Various	3	1	200	N 1	0	SM	A: 18.1	Good	C: Fair	Hedgerow, species include yew, holly & bay	C.2
				E 1	0		R: 2.4		S: Good		10 to 20 yrs
				S 1	0				B: Good		
				W 1	0						
H2											
Bay	2	1	50	N 0.5	0	Y	A: 1.1	Good	C: Fair	Bay hedgerow	C.2
Laurus nobilis				E 0.5	0		R: 0.59		S: Fair		10 to 20 yrs
				S 0.5	0				B: Fair		
				W 0.5	0						

Age Classifications: N Newly planted; EM Early Mature; Y Young; M Mature; SM Semi-mature; OM Over Mature

Condition: C Crown; S Stem; B Basal area

Stems: Ø Diameter; (Eq) Equivalent stem diameter using BS5837:2012 definition

ERC: Estimated Remaining Contributio

Tree and Tag No Species	Hght (m)	Stems No	Stems Ø (mm)	Crown Spread (m)	Crown Clear (m)	Age	RP A (m²) R (m)	Phys Condition	Structural Condition	Preliminary Recommendations Survey Comment	Cat ERC
1											
Bay *Laurus nobilis*	7	1	140	N 2 E 3 S 3 W 2	4 1 1 4	SM	A: 8.9 R: 1.68	Good	C: Fair S: Good B: Good	Crown suppressed by neighbouring tree	C.1 20 to 40 yrs
2											
Tree Rhododendron *Rhododendron arboreum*	6	4	245 (Eq)	N 1 E 5.5 S 5.5 W 1	1 1 1 1	SM	A: 27.1 R: 2.93	Good	C: Fair S: Fair B: Fair	Stems grow parallel to ground for 1.5m. Multi stemmed.	C.1 10 to 20 yrs
3											
Mountain Ash *Sorbus aucuparia*	5	1	90	N 2 E 2 S 2 W 2	2 1 1 1	Y	A: 3.7 R: 1.08	Good	C: Fair S: Good B: Good	2 co-dominant stems from 2m.	C.1 10 to 20 yrs
4											
Cupressus *Sp.*	8	6	441 (Eq)	N 4 E 4 S 5 W 4	5 5 3 4	M	A: 88 R: 5.29	Fair	C: Fair S: Fair B: Good	Tree is on property boundary. The 3 smaller stems (<150mm) are dead.	B.1 20 to 40 yrs
5											
Common Ash *Fraxinus excelsior*	9	1	790	N 3.5 E 4 S 4 W 3.5	5 5 5 5	M	A: 282.4 R: 9.48	Good	C: Fair S: Good B: Good	2 co-dominant stems from 3m. Recently pollarded	B.1 20 to 40 yrs
6											
Common Oak *Quercus robur*	12	1	780	N 5 E 5 S 5 W 5	5 5 5 5	M	A: 275.3 R: 9.36	Good	C: Fair S: Good B: Good	Recently reduced. Cavities at sites of old reduction points.	B.1 20 to 40 yrs

Age Classifications: N Newly planted; EM Early Mature; Y Young; M Mature; SM Semi-mature; OM Over Mature

Condition: C Crown; S Stem; B Basal area

Stems: Ø Diameter; (Eq) Equivalent stem diameter using BS5837:2012 definition

ERC: Estimated Remaining Contributio

69 New Brighton Road, Emsworth, Hampshire, PO10 7QR - Arbtech TS 01

Tree and Tag No Species	Hght (m)	Stems No	Stems Ø (mm)	Crown Spread (m)	Crown Clear (m)	Age	RP A (m2) R (m)	Phys Condition	Structural Condition	Preliminary Recommendations Survey Comment	Cat ERC
7											
Apple *Malus Spp.*	4	1	60	N 2 E 1.5 S 1.5 W 2	1 1 1 1	Y	A: 1.6 R: 0.71	Good	C: Fair S: Good B: Good	Single straight stem	C.1 10 to 20 yrs
8											
Bay *Laurus nobilis*	4	2	85 (Eq)	N 1 E 1 S 1 W 1	2 2 2 2	Y	A: 3.3 R: 1.02	Good	C: Fair S: Fair B: Good	2 co-dominant stems from base.	C.1 10 to 20 yrs
9											
Magnolia *Sp.*	4	3	145 (Eq)	N 3 E 5 S 4 W 3	0 0 0 0	SM	A: 9.5 R: 1.73	Good	C: Fair S: Fair B: Fair	Multi stemmed from base.	C.1 10 to 20 yrs
10											
Pissards Plum *Prunus atropurpurea*	5	7	212 (Eq)	N 3 E 4 S 3 W 3	0 1 1 1	SM	A: 20.3 R: 2.54	Good	C: Fair S: Fair B: Good	Multi stemmed from 1m.	C.1 10 to 20 yrs
11											
Fig *Ficus carica*	4	4	252 (Eq)	N 2 E 4 S 4 W 4	2 1 1 0	SM	A: 28.7 R: 3.02	Good	C: Fair S: Fair B: Good	Situated against outbuilding. Multi stemmed from base.	C.1 10 to 20 yrs
12											
Common Walnut *Juglans regia*	7	2	222 (Eq)	N 4 E 4 S 3 W 3	1 1 0 0	SM	A: 22.3 R: 2.66	Good	C: Fair S: Fair B: Good	2 co-dominant stems from 0.5m.	B.1 20 to 40 yrs

Age Classifications: N Newly planted; EM Early Mature; Y Young; M Mature; SM Semi-mature; OM Over Mature

Condition: C Crown; S Stem; B Basal area

Stems: Ø Diameter; (Eq) Equivalent stem diameter using BS5837:2012 definition

ERC: Estimated Remaining Contributio

69 New Brighton Road, Emsworth, Hampshire, PO10 7QR - Arbtech TS 01

Appendix 2: Tree Protection Notice

(To be printed at A3 or larger)

Tree Protection Area

KEEP OUT

Do **not** move this fence

(TOWN & COUNTRY PLANNING ACT 1990)
TREES ENCLOSED BY THIS FENCE ARE PROTECTED BY PLANNING CONDITIONS AND/OR ARE THE SUBJECT OF A TREE PRESERVATION ORDER.
CONTRAVENTION OF A TREE PRESERVATION ORDER MAY LEAD TO CRIMINAL PROSECUTION

ANY INCURSION INTO THE PROTECTED AREA MUST BE WITH THE WRITTEN PERMISSION OF THE LOCAL PLANNING AUTHORITY

ARBTECH

Arbtech Consulting Limited.
Unit 3, Well House Barn, Chester Road, Chester, CH4 0DH
www.arbtech.co.uk - 01244 661170

Appendix 3: Contact Details

Name	Position	Company	Contact
Andy Grice	Client		
	Tree Officer		
	Arboricultural Consultant	Arbtech Consulting Ltd.	01244 661170 https://arbtech.co.uk
	Site Manager		
	Main contractor		

Document Production Record

Document number	Editor	Signature	Position	Issue number	Date
Arbtech AMS 01	David Garrick		Arboricultural Consultant	1	11/04/19

Limitations

Arbtech Consulting Ltd has prepared this Report for the sole use of the above named Client/Agent in accordance with our terms of business, under which our services were performed. No other warranty, expressed or implied, is made as to the professional advice included in this Report or any other services provided by us. This Report may not be relied upon by any other party without the prior and express written agreement of Arbtech Consulting Ltd. The assessments made assume that the sites and facilities will continue to be used for their current purpose without significant change. The conclusions and recommendations contained in this Report are based upon information provided by others and upon the assumption that all relevant information has been provided by those parties from whom it has been requested. Information obtained from third parties has not been independently verified by Arbtech Consulting Ltd.

Copyright

© This Report is the copyright of Arbtech Consulting Ltd. Any unauthorised reproduction or usage by any person other than the addressee is strictly prohibited.