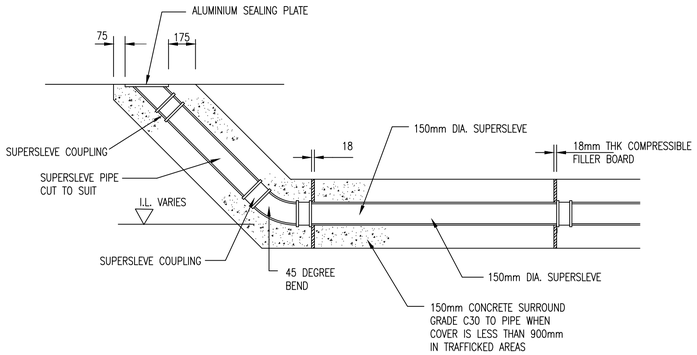


## LIGHT DUTY RODDING EYE DETAIL

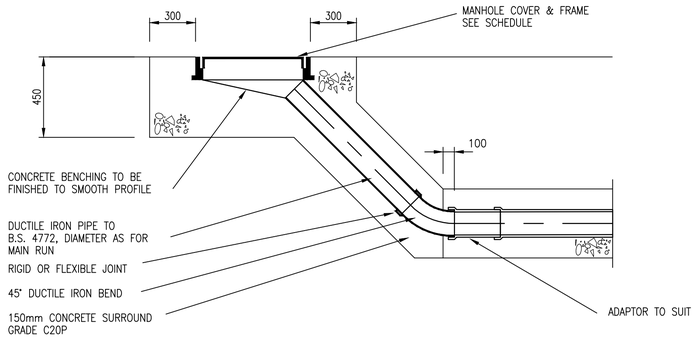


## HEAVY DUTY RODDING EYE DETAIL

SCALE 1:20

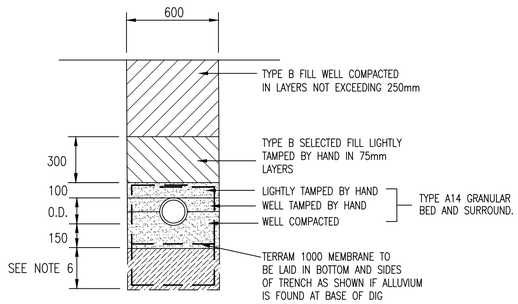


## PIPE BEDDING DETAIL – TYPE 1

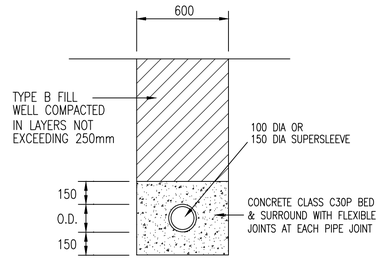


## PIPE BEDDING DETAIL – TYPE 2

PIPE BEDDING DETAIL FOR COVER TO PIPES LESS THAN 900mm IN TRAFFICKED AREAS

| PIPE SIZE | TRENCH WIDTH |
|---|---|
| 150 DIA. = | 600mm |
| 225 DIA. = | 700mm |
| 300 DIA. = | 750mm |
| 375 DIA. = | 1050mm |
| 450 DIA. = | 1150mm |

## PIPE TRENCH TABLE

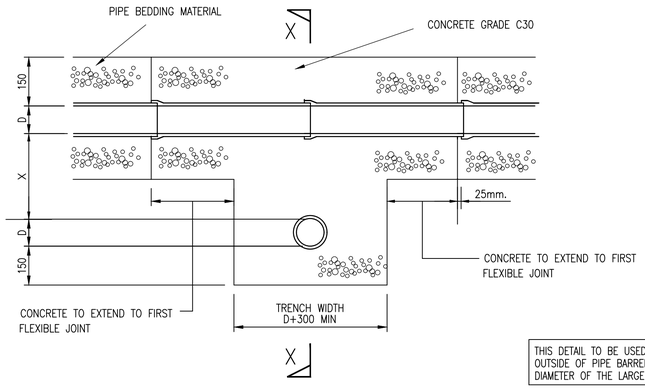


## PIPE CROSSING DETAIL

THIS DETAIL TO BE USED WHEN DIMENSION "X" BETWEEN OUTSIDE OF PIPE BARRELS IS LES THAN 300mm OR THE DIAMETER OF THE LARGER PIPE

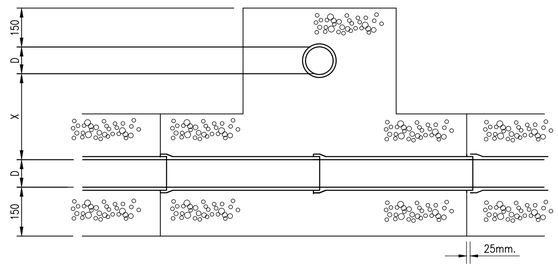


## SECTION X–X

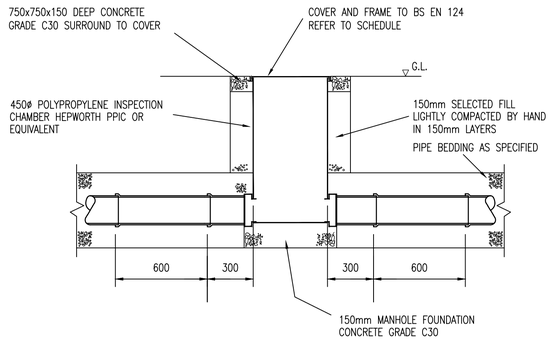


## 450ø INSPECTION CHAMBER

FOR USE IN NON–TRAFFICKED AREAS

NOTES:

1. THIS DRAWING IS COPYRIGHT AND SHOULD NOT BE REPRODUCED WITHOUT APPROVAL.

2. THIS DRAWING TO BE READ IN CONJUNCTION WITH THE ARCHITECTS DRAWINGS. ANY DISCREPANCIES ARE TO BE BROUGHT TO THE ATTENTION OF BOTH PARTIES IMMEDIATELY.

3. ANY DIMENSIONS/LEVELS INDICATED 'ref.' REFER TO ASSUMED/EXISTING DIMENSIONS WHICH ARE TO BE SITE CHECKED PRIOR TO THE COMMENCEMENT OF ANY WORK.

PRELIMINARY

| Version | Amendment | Revised by and date | Checked by and date | Approved by and date |
|---|---|---|---|---|
| P1 | PRELIMINARY | HDL/07.18 | HDL/07.18 | HDL/07.18 |

ORIGINAL DRAWING SIZE – A1

CAD REF.

X–REFS:

HAMILL DAVIES LIMITED
Consulting Civil and Structural Engineers

Client: JEREMY SAMUELS
Project: DOLPHIN QUAY, EMSWORTH
Drawing Title: DRAINAGE/EXTERNAL WORKS DETAILS – 3
Purpose: PRELIMINARY
Drawn: HDL
Designed:
Scale: 1:20 @ A1
Issuing Office: SWANMORE
Telephone: 01489 893 596
Drawing Number: 18–3130–553
Version: P1