Technical
Arboriculture
www.techarb.co.uk

Arboricultural Impact Appraisal and Method Statement

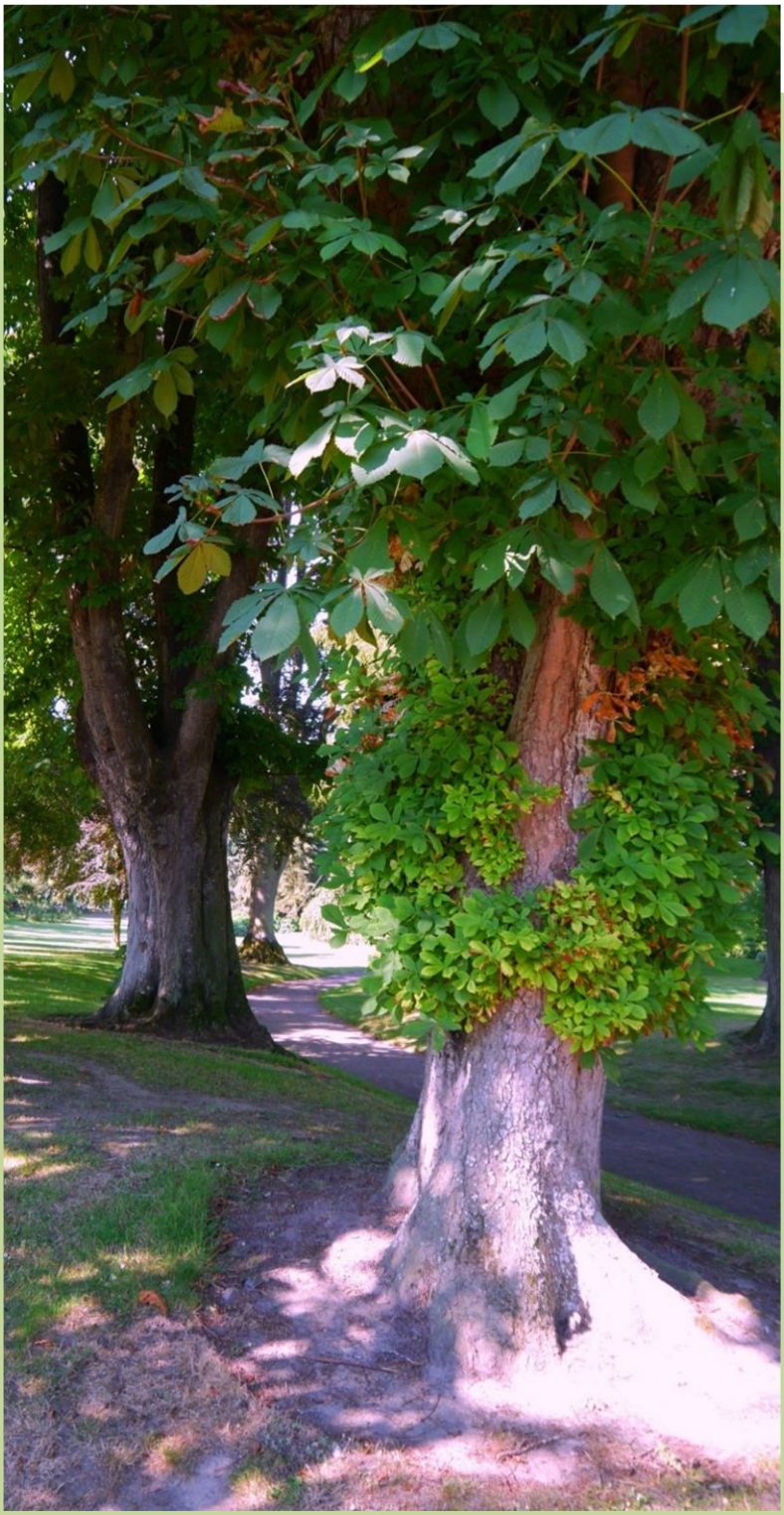

51 Fourth Avenue, Havant, Hampshire

Arboricultural Impact Appraisal and Method Statement

51 Fourth Avenue, Havant, Hampshire

Prepared by

Kevin Cloud BSc Hons, Tech Cert Arbor A, F Arbor A

Arboricultural Association Registered Consultant RC174

Report reference number: AIA/AMS-KC/51FOURTH/001

Report date: March 2018

The content and format of this report are for the exclusive use of the client. It may not be sold, lent, hired out or divulged to any third party not directly involved in this subject matter without our written consent. Whilst every effort is made to achieve this accuracy, Technical Arboriculture Limited cannot guarantee the accuracy of data contained within this report, associated drawings or appendices and cannot be held accountable for any errors, omission or any loss as a result of the use of supplied data.

Any enquiries regarding this report should be addressed to Technical Arboriculture Limited, 1 Chase Farm Close, Waltham Chase, Hampshire, SO32 2UB or by email to info@techarb.co.uk.

Summary

Tree data

Data in relation to the trees within the scope of the survey are included in the **tree schedule** contained at the **appendices**.

Purpose of Report

The purpose of the report is to provide sufficient information to the local planning authority (LPA) on the impact of the development proposal on trees and their contribution to local character and amenity. This information is provided so that the LPA may determine the planning application to which it is associated.

Report Contents

The report comprises the following elements which should be read in conjunction and subject to cross reference:

- **arboricultural impact appraisal** (AIA) which provides a description, analysis and conclusion in respect of the impact of development on trees;
- **appendices** providing relevant additional information including the tree survey schedule.

Summary of impact on trees

The development proposal is to construct new extension to rear and new workshop on the site of the existing garage at 51 Fourth Avenue, Havant, Hampshire.

The trees that could be affected by the development have been surveyed. The details of the tree survey and root protection area calculations are shown at appendix one of this report. Information has been supplied to the client on the constraints that trees impose upon the use of the site.

A protected mature oak tree on the site can be retained and protected. No tree loss is required to facilitate development.

Some construction activity will be necessitated within the root protection area of the oak. However, the encroachment into plotted root protection area is negligible and the use of

appropriate protective measures will ensure that these areas will not be subjected to significant ground disturbance.

If adequate precautions to protect the retained trees are specified and implemented through the arboricultural method statement included in this report, the development proposal will have no significant adverse impact on the contribution of trees to amenity or character in the wider setting.

If the local planning authority is anxious about tree protection during development, direct reference to this document in planning conditions would make effective enforcement easier.

Kevin Cloud BSc Hons, Tech Cert Arbor A, F Arbor A
Arboricultural Association Registered Consultant RC174
Director and Principal Arboricultural Consultant

Introduction

1 The client is seeking planning consent for development at 51 Fourth Avenue, Havant, Hampshire.

2 My advice has been sought on the arboricultural issues relating to this project in order to satisfy the requirements of the local planning authority in respect of trees and development. Where applicable, methodologies, practices and recommendations, made or referred to by the project arboricultural consultant, follow relevant guidance contained in *British Standard 5837:2012 Trees in relation to design, demolition and construction – Recommendations* [hereafter referred to as BS5837:2012].

Client's brief and scope of report

3 Instructions have come from Mr Tony Downer, 51 Fourth Avenue, Denvilles, Havant, Hampshire PO9 2QU.

4 I have been instructed to assess the significant trees that could be affected by the development proposal and to prepare the following information to accompany the planning submission:

- a schedule of relevant trees including basic data and a condition assessment based on the guidance criteria within BS5837:2012;
- tree constraints information to the design team;
- an appraisal of the impact of the proposal on trees and any resulting impact that the proposal will have on local amenity;
- an arboricultural method statement setting out appropriate protective measures and management for trees to be retained.

5 This report provides an analysis of the implications of the development proposal on trees and local amenity. It also provides additional guidance on protective measures, appropriate tree management and any special engineering, or other such techniques or methods, required to minimise impact to trees.

6 The primary purpose of this report is for the local planning authority to review the tree related information in support of the planning submission and utilise it as the basis for issuing a planning consent, formulating tree related planning

conditions or engaging in further discussions towards that end. Any use outside the planning application context is not intended or authorised.

7 Although this document is not meant to be a full and detailed report on tree health and safety, any significant visible structural defects or physiological conditions identified, together with preliminary tree works, are noted in the appropriate columns in the tree schedule. However, a full post development tree inspection is recommended to establish that the trees retained during construction present acceptable levels of risk once the development has been completed.

8 Any plans, tables, figures or attachments whether within this document, appendices or supplied as associated drawings are illustrative, and based on layout drawings, topographical surveys or other information provided. Therefore, all scaled measurements should be checked against the original design documents.

9 Any plans, tables, figures or attachments whether within this document, appendices or supplied as associated drawings should only be used for dealing with the tree protection issues and all other uses are prohibited, unless authorised by Technical Arboriculture Limited.

Document disclosure

10 The following text and plans have been provided in order to fulfil the client's brief:

- Existing site layout: provided by client
- Proposed site layout: provided by client

Location and brief site description

11 The site is located on land occupied by our client at 51 Fourth Avenue, Havant, Hampshire.

Land survey

12 I have been provided with CAD based and paper site plans which I assume to be based upon an accurate land survey. This includes plots of tree locations and other topographical information relevant for the preparation of this report and

appendices. All information in this report and appendices assumes accuracy of the land survey supplied and no responsibility for accuracy can be assumed or guaranteed by the author of this document.

Soil Assessment

13 I have not been supplied with any detailed site soil analysis or been engaged to undertake such investigations by our client. A site-specific soil assessment may inform decisions relating to the root protection area (RPA), tree protection, new planting design and foundation design to take account of retained, removed and new trees. As and when such information becomes available results should be forwarded to the project arboricultural consultant and other relevant professionals involved in site layout, planning and design (e.g. structural engineer, landscape architect).

Tree Survey – categorisation and assessment of tree stock

14 I conducted a tree survey on 27th March 2018. Where practicable, the survey was carried out in accordance with guidance contained at section 4.4 (tree survey) and 4.5 (tree categorization method) of BS5837:2012. The results of the survey may be viewed at appendix one.

15 Observations were made from ground level without detailed investigations. The survey involved a visual inspection of the trunk, together with the major branches and forks of the canopy. The examination was restricted to those views available within the survey site and the neighbouring area.

16 The position of the trees is shown on the submitted tree survey and protection plan drawing based on the site plan provided to us by our client or their representative. British Standard colour coding and root protection area information has been added. See appendix two.

17 The height measurements are approximations and have not been calculated using a clinometer. Where the canopy extends over an adjacent property, or where the under storey is very dense, the canopy spread has been estimated and stated as such with the tree schedule.

18 This report is based on the condition of the trees at the time of inspection. Trees are dynamic and their condition changes throughout their lives. No inspection has been made of the soil structure. No account has been taken of the effects of

the tree/s or their removal directly or indirectly on any building/s or structure/s relating to the possibility of subsidence or heave. Regular inspections of the tree/s should be undertaken to monitor their health and determine appropriate management.

19 This report is to be used for the purposes for which it is prepared as specified in paragraphs three to nine of this document.

20 The trees identified in the tree survey are those upon which development of the land may have potential impact in line with guidance at paragraph 4.2.4 (b) of BS5837:2012.

Tree constraints

Above and below ground constraints

21 Following our tree survey, the data gathered was used to provide constraints information to our client and their appointed architect, based on the locations of retained trees. Crown extension of the trees and root growth has been taken into consideration with both the client and architect agreeing to alterations to the location, design and construction methods to lessen potential impact on trees to be retained.

Defining and plotting root protection areas (RPAs)

22 The root protection areas (RPAs) have been calculated (see appendix one) in accordance with guidance contained at section 4.6 (root protection area) of BS5837:2012.

23 The RPAs have been plotted on the tree constraints plan, and on the tree survey and protection plan, in accordance with guidance contained in paragraph 4.6.2 of BS5837:2012 (please refer to appendix two). RPAs are shown as a circle around each of the category A, B and C graded trees (BS5837:2012 paragraph 5.2.1.).

24 It should be noted that BS5837:2012 states (section 4.6.2) that *"the RPA for each tree should initially be plotted as a circle centred on the base of the stem. Where pre-existing site conditions or other factors indicate that rooting has occurred asymmetrically, a polygon of equivalent area should be produced. Modifications to the shape of the RPA should reflect a soundly based arboricultural assessment of likely root distribution".*

Furthermore, *"Any deviation in the RPA from the original circular plot should take account of the following factors whilst still providing adequate protection for the root system:*

a) The morphology and disposition of the roots, when influenced by past or existing ground conditions (e.g. the presence of roads, structures and underground apparatus);
b) Topography and drainage;
c) The soil type and structure;
d) The likely tolerance of the tree to root disturbance or damage, based on factors such as species, age, condition and past management".

Legal constraints

25 I have not been asked to ascertain the protection status of the trees. If the trees are subject to statutory protection any arboricultural work recommended by this report may only be carried out following the issue of formal planning consent, notwithstanding any restrictions placed by planning conditions contained therein. If tree work is to commence prior to the issue of consent we recommend that the client, or project arboricultural consultant, liaise with the local planning authority.

26 A licence from the Forestry Commission is normally required to fell growing trees (Forestry Act, 1967). However, an occupier may fell up to 5 cubic metres per calendar quarter without a licence provided that no more than 2 cubic metres are sold. A felling licence is not required if the work is undertaken in accordance with an approved planning permission or the trees are dead, dying or dangerous.

27 The Wildlife and Countryside Act 1981, as amended by the Countryside and Rights of Way Act 2000, provides statutory protection to birds, bats and other species that inhabit trees. In addition, European Protected Species legislation places a duty upon landowners to ensure that best practice is followed or an appropriate license issued prior to any work commencing which may affect bats, reptiles or dormice. These could impose constraints on the use and timing of access to the site in addition to any of the tree matters considered in this report. These issues are not the subject of this report. However, our client is advised to seek ecological advice and this may be provided by Technical Arboriculture Limited.

Arboricultural Impact Assessment

Summary of impact on trees:

28 Table 1: Summary of trees that may be affected by development.

RETAINED TREES – Potential damage through disturbance to RPA	Tree No	BS Cat
Demolition Some existing site features will require careful demolition to prevent damage to root protection areas and above ground parts of trees to be retained.	nil	
Access and car parking Installation of some elements of parking bays and access will need to be carried out using suitable no dig solution to prevent tree root damage e.g. Geoweb cellular confinement system or similar.	nil	
Foundation design Where elements of some buildings encroach into the plotted RPA of retained trees a suitable low impact foundation design will be required.	nil	
Construction activity – working space requirements Areas of RPA requiring suitable ground protection or scaffolding precaution.	T1	B1
Construction activity – encroachment into RPA Minor encroachment into plotted RPA to install site features.	T1 T2	B1 C1
Construction – low impact development Areas where small, low impact structures (e.g. bin or cycle store) are to be located within plotted RPA.	nil	
RPA correction Area where pre-existing site conditions (e.g. levels, services, compaction, slope, etc.) do not favour rooting. RPA adjusted to reflect arborist's professional opinion of prevailing root spread. Adjustment noted on tree survey and protection plan.	nil	

RETAINED TREES: Pruning	Tree No	BS Cat
Access pruning Minor crown lifting or pruning may be required to facilitate and/or improve access to the development or to install site features.	nil	
Ecological considerations (see note below) Retention as veteran tree or habitat feature. Ecological considerations refer to arboricultural features only, where trees or tree features are considered noteworthy in relation to their potential to provide habitat or ecological benefit. Assessment is preliminary and client should refer to project ecologist for full ecological site appraisal.	nil	
Recommended pre-development arboricultural work Refer to tree survey schedule.		
TREES TO BE REMOVED: Actual tree loss	**Tree No**	**BS Cat**
Trees not viable for retention or poor grade trees Trees which should not be considered a constraint to development (category U or category C).	nil	
Trees lost to development footprint Built form.	nil	
Trees lost to development footprint Car park and access requirements.	nil	
Trees lost to construction activity Demolition.	nil	
Trees lost to construction activity Working requirements.	nil	
TREES TO BE REMOVED: Potential tree loss		
None anticipated.		

Detailed impact appraisal

Trees to be retained and protected

29 Some site operations, or restricted working space, require encroachment into the root protection areas of retained trees. Where such access is required this shall only occur following the installation of ground protection, to the appropriate

standard for the expected traffic, as detailed in the arboricultural method statement and in line with guidance contained within BS5837:2012.

30 The proposed workshop is located on the footprint of the existing garage with the exception of a new section which will be built within the plotted root protection area (RPA) of T1. I have reviewed the situation carefully and calculated the intrusion into the plotted RPA to be 6m^2 of a total calculated root protection area of 290m^2. This equates to 2% of the calculated total RPA and I consider this to be negligible. Compensatory rooting volume is available contiguous with the plotted RPA within gardens to the north, south and east.

31 The proposed new workshop footprint addition also lies at the periphery of the plotted root protection area of T2 (palm). The incursion into RPA of this poor offsite tree is less than 3% of RPA and I consider this also to be negligible with compensatory rooting volume available to the north and east.

32 All other trees located within the development site will be located away from intense activity.

33 I have considered the situation carefully and it is my opinion that these trees may be successfully retained without any adverse effects provided that appropriate protective measures are specified.

Tree losses

34 None required or anticipated.

Future Growth

35 The proximity of trees offers sufficient clearance to the proposed development. In general, the trees on the site will complement the development and aid its integration into the local area. No containment pruning is required or expected.

36 The oak is subject of Tree Preservation Order giving control over future tree works to the local planning authority.

Shading, windows and orientation

37 The site location offers good opportunity for solar gain at various parts of the day. No issues from excessive shade or proximity of trees are envisaged.

Conclusion

38 I have considered the impact to trees and the effect of tree loss, pruning and other site operations on local tree cover, amenity and character.

39 Provided that the recommendations of this report are followed and that construction methods, as detailed within the arboricultural method statement, are followed when working near retained trees, I consider impact to be minimal and acceptable.

Arboricultural Method Statement

Terms of reference

40 This Arboricultural Method Statement has been compiled to aid the ongoing health and vitality of trees to be retained on the development site at 51 Fourth Avenue, Havant, Hampshire. Implementation of the protection methods, and other details, within this report are integral to achieving this aim.

41 For details of trees to be retained and locations and types of protection, reference should be made to the latest revision of the tree survey and protection plan which should be displayed prominently on site for all staff to see.

42 Where applicable, the methodologies, practices and recommendations contained within this Arboricultural Method Statement follow relevant guidance contained *in British Standard 5837:2012 Trees in relation to design, demolition and construction – Recommendations* [hereafter referred to as BS5837:2012].

43 The controlling authority is Havant Borough Council, who should be consulted on any matters relating to existing trees at Planning Department, Civic Offices, Havant, PO9 2AX.

44 Any questions relating to the content of this method statement or associated tree protection plan should be directed to Kevin Cloud at Technical Arboriculture Limited, 1 Chase Farm Close, Waltham Chase, Hampshire, SO32 2UB, 01489 896655 or info@techarb.co.uk

Phasing and monitoring of development

45 BS5837:2012 states that *"wherever trees on or adjacent to a site have been identified within the tree protection plan for protective measures, there should be an auditable system of arboricultural site monitoring. This should extend to arboricultural supervision whenever construction and development activity is to take place within or adjacent to the RPA".*

46 The following phasing is governed by operational constraints and may be subject to change or amendment. The project arborist must be notified of any proposed changes to this schedule:

- Phase one - Pre-Development
  - Pre-commencement site meeting attended by the local planning authority arboricultural officer, project arboricultural consultant, client (or representative) and the construction site manager
  - Tree removals, pruning and remedial work
  - Tree protection measures installed
  - Site inspection by project arboricultural consultant

- Phase two – Development
  - Phase 2 is subject to monthly site monitoring visits by project arboricultural consultant
  - Site compound/WC/materials
  - Groundworks and services
  - Development
  - Completion of development

- Phase three – Post development
  - Removal of protective fencing
  - Landscape operatives briefed by project arboricultural consultant
  - Hard and soft landscaping
  - Boundary treatments

47 Arboricultural monitoring involves a site visit and completion of a standard form which is signed by the site manager (or representative) and the project arboricultural consultant, and copied to both client and local planning authority tree officer.

48 The monitoring visit is held to ensure that the approved tree protection measures are continually adhered to. If remedial work or alterations are required to protective measures these can be agreed by all parties and actioned promptly.

49 Arboricultural supervision is to be carried out at all crucial stages of the development process to ensure that detailed tasks are carried out to the approved methodology. Such supervision shall occur during:

- Any demolition of existing buildings, surfaces or structures within or adjacent to the RPA
- Hand excavations for boundary treatment posts
- Any incursion into protection areas or exclusion zones for whatever reason

50 Supervision will require the project arboricultural consultant to be present throughout the task, to ensure all arboricultural objectives are met.

51 If the task is to take a long time period, the project arboricultural consultant may, at their discretion, reduce supervision to telephone contact between the site foreman and the project arboricultural consultant.

52 The local authority arboricultural officer will have free access to the site and pass any recommendations directly to the project arboricultural consultant.

53 Remedial tree works and any site clearance will be carried out prior to the erection of any tree protection fencing; however, it may be expedient to mark out the extent of root protection areas and protective measures to aid any site clearance or pruning work.

Root Protection Areas (RPAs)

54 Based on tree survey data, root protection areas (RPAs) have been calculated and determined for every retained tree. The RPA is designed to protect a functional minimum of tree root mass in order to ensure that trees survive the construction process.

55 Some trees on the site may be subject to statutory protection by tree preservation order or location within a conservation area. Damaging such trees is a criminal offence and contrary to any tree related planning condition imposed with planning consent. Breach of planning consent could lead to the issue of a stop notice; breach of statutory protection could result in heavy fines.

56 It is the responsibility of everyone engaged in the construction process to respect tree protection measures and observe necessary precautions within and adjacent to them. If in any doubt when working close to trees – consult the site foreman who will contact the project arboricultural consultant.

Restrictions within tree protection areas

57 Inside the area of protective fencing, the following shall apply:

- **No** mechanical excavation whatsoever
- **No** excavation by any other means without arboricultural site supervision
- **No** hand digging without a written method statement having first been approved by the project arboricultural consultant
- **No** lowering of levels for any purpose (except removal of grass sward with hand tools)
- **No** storage of plant, equipment or materials
- **No** vehicular or plant access
- **No** fire lighting
- **No** handling, discharge or spillage of any chemical substance including cement washings
- **No** action likely to cause localised water logging

58 In addition to the above, further precautions are necessary adjacent to trees:

- A 10-metre separation distance shall be observed between any tree and substances injurious to tree health, including fuels, oil and bitumen, cement (including cement washings), builders sand, concrete mixing and other noxious chemicals
- No fire shall be lit such that flames come within five metres of tree foliage; this should be taken to mean a fire separation distance of 20 metres from any tree's canopy

Tree protection barriers

59 The tree survey and protection plan shows the alignment of tree protection barriers. Such barriers shall be installed prior to any of the following taking place:

- Plant and material delivery
- Demolition
- Soil stripping

- Construction works
- Utility installation
- Landscaping

60 It is advised that, in order to ensure accuracy and avoid future fencing adjustments (which should be carried out under supervision), the barriers are set out by a surveyor with all node points being marked clearly on site for fencing contractor to work to. The tree survey and protection plan shows the root protection area radius in metres next to each retained tree after the words RPA (e.g. RPA6.2m). This is the minimum distance from the stem of each tree, within which the tree should be subject to protective measures and/or special engineering measures to ensure successful retention.

61 If, on completion of installation of protective measures, sections of the RPA are still exposed/uncovered or still open to construction access, immediate contact should be made with the project arboricultural consultant to ensure corrective measures are made.

62 Once erected, all barriers will be regarded as sacrosanct and will not be removed or altered without prior consultation with the project arboricultural consultant and/or approval of the local planning authority.

63 BS5837:2012 states that barriers should *"be fit for the purpose of excluding construction activity and appropriate to the degree and proximity of work taking place around the retained tree(s). Barriers should be maintained to ensure that they remain rigid and complete".*

64 *In line with BS5837:2012 "the default specification should consist of a vertical and horizontal scaffold framework, well braced to resist impacts, as illustrated in figure 2* [figure 2 BS5837:2012 is shown at appendix three of this report]*. The vertical tubes should be spaced at a maximum interval of 3m and driven securely into the ground. Onto this framework, welded mesh panels should be securely fixed. Care should be exercised when locating vertical poles to avoid underground services and, in the case of bracing poles, also to avoid contact with structural roots. If the presence of underground services precludes the use of driven poles, an alternative specification should be prepared, in conjunction with the project arboricultural consultant that provides an equal level of protection.*

Such alternatives could include the attachment of the panels to a free-standing scaffold support framework".

65 *"Where the site circumstances and associated risk of damaging incursion into the RPA do not necessitate the default level of protection, an alternative specification should be prepared by the project arboricultural consultant and, where relevant, agreed by the local planning authority. For example, 2m tall welded mesh panels on rubber or concrete feet might provide an adequate level of protection from cars, vans, pedestrians and manually operated plant. In such cases the fence panels should be joined together using a minimum of two anti-tamper couplers, installed so they can only be removed from inside the fence. The distance between the couplers should be at least one metre and should be uniform throughout the fence. The panels should be supported on the inner side by stabilizer struts, which should normally be attached to a base plate secured with ground pins (figure 3a* [figure 3a BS5837:2012 is shown at appendix three of this report]*. Where the fencing is to be erected on retained hard surfacing or it is otherwise unfeasible to use ground pins, the stabilizer struts should be mounted on a block tray (figure 3b)*.

66 It may feasible to use temporary site office buildings as components of the tree protection barriers, provided these can be installed and removed without detrimental impact upon retained trees or their rooting environment.

67 Once the exclusion zone has been protected by barriers and/or ground protection, construction activity may commence. All weather notices should be attached to the barriers. A template of an appropriate notice is provided at appendix four of this report.

<u>Ground protection</u>

68 Where construction working space or temporary construction access is required, this should be facilitated by a set-back in the alignment of tree protection barriers as shown on the tree survey and protection plan.

69 RPAs must be covered with ground protection until there is no further risk of damage from demolition and/or construction activity.

70 Existing hard surfacing that is not proposed for re-use as part of the final site layout should be retained to act as temporary ground protection during construction, rather than removed during demolition.

71 Where the set-back would expose unmade ground to construction damage, new temporary ground protection should be installed.

72 New temporary ground protection should be capable of supporting the construction traffic entering the area onto which it is to be laid in accordance with BS5837:2012. Typically ground protection might comprise one of the following:

- Pedestrian movements – scaffold boards placed either on top of a driven scaffold frame to form a suspended walkway; or on top of a compression resistant layer of 100 mm depth of woodchip, laid onto a geotextile membrane;
- Plant (pedestrian operated up to 2 t gross weight) – proprietary, inter linked ground protection boards placed upon a compression resistant layer of 150 mm depth of woodchip, laid onto a geotextile membrane;
- Construction traffic (wheeled or tracked exceeding 2 t gross weight) – an alternative system (e.g. proprietary systems or pre-cast reinforced concrete slabs) to an engineering specification designed in conjunction with the project arboricultural consultant, to accommodate the expected loading.

73 In all cases, the objective should be to avoid compaction, which can arise from a single passage of a vehicle.

Avoiding damage to trees

74 Care shall be taken when planning site operations in proximity to retained trees to ensure that wide or tall loads, or plant with booms, jibs and counterweights and static or mobile cranes can operate without coming into contact with retained trees. Such contact could result in serious injury which may make a tree's safe retention impossible.

75 Consequently, any transit or traverse of plant, in proximity of trees, shall be conducted under the supervision of a banksman to ensure that adequate clearance from trees is maintained at all times.

76 In some circumstances, it may not be possible to achieve this without access facilitation pruning. Such pruning shall be kept to the utmost minimum required to facilitate development and shall be carried out in strict accordance with the

guidance set out in the relevant section of this report entitled "Tree Surgery" (see below).

77 Under no circumstances shall construction personnel undertake tree pruning operations.

Tree Surgery

78 Tree work proposals based on preliminary inspection are set out in the tree schedule within the appendices.

79 All permitted or approved tree work must be carried out in accordance with British Standard 3998:2010 Tree work – Recommendations.

80 Work should be carried out by suitably qualified and experienced professional tree surgeons. For safety and insurance reasons under no circumstances should site personnel undertake any tree pruning operations.

81 The Wildlife and Countryside Act 1981, as amended by the Countryside and Rights of Way Act 2000, provides statutory protection to birds, bats and other species that inhabit trees. In addition, European Protected Species legislation places a duty upon landowners to ensure that best practice is followed or an appropriate license issued prior to any work commencing which may affect bats, reptiles or dormice. The statutory protection afforded will be adhered to. Failure to do so may lead to enforcement action and/or prosecution under the respective act. If further advice is required, particularly if bats are discovered during tree work, contact should be made immediately with the project arboricultural consultant.

82 The contractor shall seek consent from the project arboricultural consultant for the chosen tree surgeon to be used. Proof of experience, including knowledge and understanding of Arboricultural Association Guidance Note one – Bats in the context of tree work operations (as updated), and appropriate levels of insurance provision will be required, prior to approval to commence tree works. All work shall be undertaken at the appropriate time and with the consent of the site agent who shall approve a programme of work.

83 The stumps of any trees removed from within the construction exclusion zone or RPAs of retained trees will be either cut flush to ground level and left in situ or ground out using a stump grinder. At no time shall tree roots be removed by winch or any other mechanical means.

84 All operations shall be carried out to avoid damage to the trees undergoing tree surgery or neighbouring trees which are to be retained. No trees to be retained shall be used for anchorage or winching purposes.

85 The tree surgeon shall report to the project arboricultural consultant, any defects or biological disorders which may compromise the health and future safety of the tree which are not noted on the tree survey schedule supplied to the tree surgeon at the time of commencement of tree works.

86 All arisings shall be removed from site, unless other provisions have been made for their disposal, and the site shall be left clean and tidy.

Soft landscaping within root protection areas

87 Ground preparation will be carried out sensitively to ensure root damage is mitigated as much as is practicable. At no time is any heavy plant to be used within the RPA. Removal of existing vegetation will be carried out by hand, turf may be removed using a mechanical turf stripper or by hand.

88 At no time shall a rotorvator be used within any RPA to prepare the soil. Any levelling will be done by hand with the use of hand tools.

89 Should the soil be compacted or have a poor structure which may hinder the development of any new planting, soil decompaction techniques may be used upon consultation with the project arboricultural consultant.

90 New plants will be planted individually to minimise root disturbance (e.g. 'no trench' planting).

91 No works will be carried out within any RPAs if the soil moisture is of a level likely to allow compaction to occur.

Installation of underground services

92 Although every effort has been made to ensure the routing of services does not encroach into RPAs, if installation within RPAs is required the project arboricultural consultant and local authority must be notified prior to any tree protection barrier removal and the following details adhered to.

93 Trenching for the installation of underground services severs any roots present and may change the local soil hydrology in a way that adversely affects the health of trees. For this reason, particular care will be taken in the routing and methods of installing underground apparatus. Wherever possible, apparatus

should be kept together in common ducts and tree and root sensitive methods of excavation used. At all times where services are to pass within the RPA, detailed plans showing the proposed routing will be drawn up in conjunction with the project arboricultural consultant. Such plans will also show the levels and access space needed for installing the services.

94 Various trenchless solutions area available and selection and use will depend upon a variety of factors including soil type, underlying strata and type of apparatus to be installed. BS5837:2012 provides summary data on trenchless solutions for differing utility apparatus installation requirements. An extract of the summary is shown in the table below. Technical Arboriculture Limited publishes the information as useful guidance to availability of the techniques stated and accepts no responsibility for the data. The type of technique employed shall be the decision of the client. In all cases entry and retrieval pits shall be sited outside the RPAs of retained trees.

95 Table 2 – methods for install of services within root protection areas.

Method	**Accuracy mm**	**Bore diameter (A)**	**MSL m**	**Applications**	**Not suitable for:**
Micro tunnelling	<20	100 to 300	40	Gravity-fall pipes, deep apparatus, watercourse/ roadway under crossings.	Low cost projects due to relative expense.
Surface launched directional drilling	≈100	25 to 1200	150	Pressure pipes, cables including fibre optic.	Gravity-fall pipes e.g. drains and sewers. **(B)**
Pipe ramming	≈150	150 to 2000	70	Any large bore pipes and ducts.	Rocky and heavily obstructed soils.
Impact moling **(C)**	≈50 **(D)**	30 to 180 **(E)**			

Key
MSL = Maximum subterranean length
Notes
(A) Dependent on strata encountered
(B) Pit launched directional drilling can be used for gravity fall pipe up to 20m subterranean length.
(C) Impact moling (also known as thrust bore) generally requires soft, cohesive soils.
(D) Substantial inverse relationship between accuracy and distance
(E) Figures given relate to a single pass: up to 300mm bore achievable with multiple passes.

96 For smaller operations, the preferred method for trenching within RPAs is excavation using an 'air-spade' or similar. This tool utilises compressed air to remove soil from around tree roots causing minimal damage.

97 Reference can be made to National Joint Utilities Group Volume 4 (formerly referred to as NJUG 10) for guidance, but any approach must be approved by the project arboricultural consultant and brought to the attention of the local authority tree officer.

Demolition within root protection areas

98 Protective barriers and ground protection to be installed as per approved tree survey and protection plan prior to any plant arriving on site.

99 Access facilitation pruning should be undertaken as necessary to prevent injurious contact between demolition plant and the tree(s). In some cases, working space may be provided by temporary tying back of branches. If pruning or tying is required it should have been specified in the tree schedule by the project arboricultural consultant, if this is not the case then seek advice of the project arboricultural consultant prior to commencing demolition operations.

100 Sensitive demolition will occur to structures within RPAs as indicated on the tree survey and protection plan.

101 Demolition will be by folding buildings in on themselves (often referred to as "top down, pull back") with all plant and vehicles engaged in demolition work operating outside the RPA or running on ground protection suitable for the plant or vehicle employed (refer to section on ground protection).

102 Where a significant amount of dust builds up on foliage, this may need to be removed by hosing down the tree(s).

103 Where an existing hard surface or slab floor is to be removed, care should be taken to ensure no disturbance to tree roots that may be present beneath it. Where practicable, hand tools should be used to remove the existing surface.

104 Should this not be possible, the initial breaking up of any surface may be carried out by low impact pneumatic tools (not breakers attached to diggers or JCBs).

105 Where practicable, subsequent removal of debris will be carried out by hand. Should mechanical means be required due to the size of the debris, then a small (1.5 ton) digger may be used providing that, when picking up debris, no tines/teeth from the bucket cause any damage to the underlying soil surface. Once left with manageable sized pieces, hand removal will be used. Where the digger is employed, it will only travel on the undisturbed hard surface (within RPA), clearing debris as it progresses out of the RPA.

106 If a larger digger is required for whatever reason to clear the area it must follow the guidance above and work only outside the RPA.

107 If a new hard surface is to be installed, it may be preferable to leave any existing sub base in situ, provided that it can be augmented, as required, to successfully provide the required sub base for the new surface.

108 If underground structures located within the RPA are, or will become, redundant it is preferable to leave these in situ rather than risk damage to roots during removal. If, for any reason, such structures must be removed then advice should be sought from the project arboricultural consultant.

109 No reduction in levels of the underlying soil surface will occur.

110 At no point are any heavy machinery permitted within the RPA.

111 The underlying soil may be levelled by the addition of up to 100mm of good quality top soil to BS3882:1984. Hand tools only will be used for any levelling works; this work will not disturb the underlying soil.

112 Arboricultural supervision must be employed during all work within the RPA.

113 Contamination of the soil by fuel and lubricant leaks must be avoided. If such a situation arises the project arboricultural consultant must be notified to assess the situation and to prescribe remedial measures.

Appendix one - Tree survey and classification in accordance with table one of BS5837

These tree survey notes have been guided by the recommendations of British Standard 5837:2012 and define the criteria for pre-development tree surveys.

Tree Number (No)
Numbers relate to those marked on the Tree Constraints Plan and Tree Protection Plan drawings. Where specifically instructed small durable numbered metal tags have been applied to each tree surveyed.

Common Name
Species of tree listed by common name.

Height (Hgt)
Height assessments are estimated in metres. Where accurate heights become a critical issue it will be necessary to return to site, as a separately commissioned exercise, to collect accurate measurements with the aid of optical instruments.

Stem Dia.
Measurement of tree stem(s) in accordance with annex C of *BS5837:2012*. In the case of multiple stems, the measurement quoted is that resulting from the appropriate calculation in line with annex C.

Branch Spread
Radial crown spread assessments are estimated in metres from the centre of the trunk / group to each of the four primary points of the compass (**N**orth, **E**ast, **S**outh, **W**est) in order to achieve a representation of the crown shape which will be recorded on the accompanying tree protection plan.

These provide a general guide to the outline of a tree / group crown but **do not constitute** tape measured dimensions. These would only be undertaken as part of a separately commissioned exercise where precise dimensions are critical to the project.

HAG
Existing height above ground level of canopy, in metres.

Life stage
An assessment of age class is made in terms of site specific maturity as part of the surrounding landscape, taking into account overall shape and form in that setting and is recorded thus:

Y = Young EM = Early mature
M = Mature OM = Over mature
V = Veteran

Phys Cond
An assessment of a tree / group's overall physiological condition is recorded as:

Good / Fair / Poor / Dead

Struct Cond
An assessment of a tree / group's overall structural condition is recorded as:

Good / Fair / Poor

Rem Con
Estimated remaining contribution in years (yrs) (<10, 10+, 20+ 40+)

Cat
British Standard category grading (U or A to C) - see guidance extracted from *BS5837:2012* on following page.

RPA
Root protection area based on *BS5837:2012* calculations and stated as **Radius** in metres (**m**) and **Area** in square metres (**m²**).

Condition comments
Data on the structural condition of the tree / group is provided, as appropriate, to give an indication of the visual appearance and any significant health and safety issues.

Management recommendations
As per *British Standard 3998:2010 Tree Work – Recommendations*

Unless otherwise stated:
All measurements are in metres (m) or millimetres (mm).
All heights are stated above ground level (AGL) of tree stem.
All distances are from base of tree.
Cardinal points are abbreviated e.g. SW = South West

Category and definition	Criteria (including sub categories where appropriate)			Identification on plan
Trees unsuitable for retention				
Category U Those in such condition that they cannot realistically be retained as living trees in the context of the current land use for longer than 10 years	• Trees that have a serious, irremediable, structural defect, such that their early loss is expected due to collapse, including those that will become unviable after removal of other category U trees (e.g. where, for whatever reason, the loss of companion shelter cannot be mitigated by pruning) • Trees that are dead or are showing signs of significant, immediate and irreversible overall decline • Trees infected with pathogens of significance to the health and / or safety of other trees nearby or very low quality trees suppressing adjacent trees of better quality Note: Category U trees can have existing or potential conservation value which it might be desirable to preserve.			**Red**
Trees to be considered for retention				
	1 Mainly arboricultural qualities	**2 Mainly landscape qualities**	**3 mainly cultural values, including conservation**	
Category A **Trees of high quality** with an estimated remaining life expectancy of at least 40 years.	Trees that are particularly good examples of their species, especially if rare or unusual or those that are essential components of groups or formal or semi-formal arboricultural features (e.g. the dominant and/or principal trees within an avenue).	Trees, groups or woodlands of particular visual importance as arboricultural and/or landscape features.	Trees, groups or woodlands of significant conservation, historical, commemorative or other value (e.g. veteran trees or wood pasture).	**Green**
Category B **Trees of moderate quality** with an estimated remaining life expectancy of at least 20 years.	Trees that might be included in category A, but are downgraded because of impaired condition (e.g. presence of significant though remediable defects including unsympathetic past management and storm damage), such that they are unlikely to be suitable for retention beyond 40 years; or trees lacking the special quality necessary to merit the category A designation.	Trees present in numbers, usually growing as groups or woodlands, such that they attract a higher collective rating than they might as individuals; or trees occurring as collectives but situated so as to make little visual contribution to the wider locality.	Trees with material conservation or other cultural benefits.	**Blue**
Category C **Trees of low quality** with an estimated remaining life expectancy of at least 10 years, or young trees with a stem diameter below 150mm.	Unremarkable trees of very limited merit or such impaired condition that they do not qualify in higher categories.	Trees present in groups or woodlands, but without this conferring on them significantly greater collective landscape value; and/or trees offering low or only temporary/transient landscape benefits.	Trees with very limited conservation or other cultural benefits.	**Grey**

Tree Survey Schedule

Tree No	Common name	Hgt m	Stem Dia m	Branch Spread m	HAG m	Life stage	Phys Cond	Struct Cond	Rem Con Yrs	Cat	RPA Radius (m)	RPA Area (m^2)
T1	Oak	12	0.8	5N 6E 5S 5W	5m	Mature	Good	Fair	40+	B1	RPA9.6m	290
	Condition Comments Built form in RPA (existing garage). Deadwood. Pruning wounds. Cavity at base W side. Recent significant crown reduction (estimated 30%).						**Management Recommendations** Remove dead wood.					
T2	Palm	8	0.2	2N 2E 2S 2W	4m	Mature	Good	Fair	20+	C1	RPA2.4m	18
	Condition Comments Offsite. No special merit.						**Management Recommendations** No work required at time of survey.					
T3	Birch	6	0.1	2.5N 2.5E 2.5S 2.5W	2m	Young	Good	Fair	10+	C1	RPA1.2m	5
	Condition Comments Offsite.						**Management Recommendations** No work required at time of survey.					

Appendix two - Tree survey and protection plan

PDF version – see separate PDF document supplied.

Appendix three – protective barriers

Default specification for protective barrier (from fig 2 *BS5837:2012*)

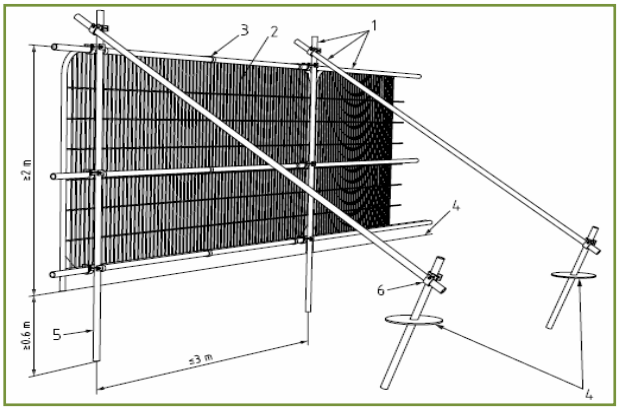

1 Standard scaffold poles.
2 Heavy gauge 2m tall galvanized tube and welded mesh infill panels.
3 Panels secured to uprights and cross members with wire ties.
4 Ground level.
5 Uprights driven into ground until secure (minimum depth 0.6m)
6 Standard scaffold clamps.

Examples of above-ground stabilization systems (from fig 3 *BS5837:2012*)

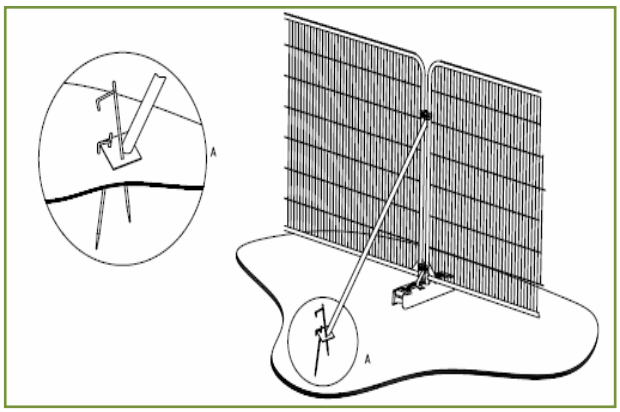

BS5837:2012 Figure 3a

Stabilizer strut with base plate secured with ground pins.

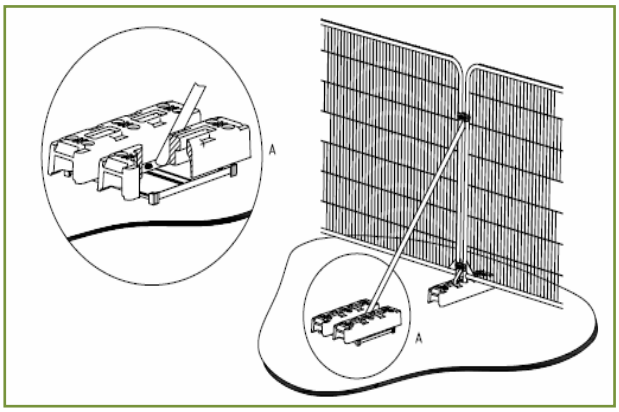

BS5837:2012 Figure 3b

Stabilizer strut mounted on block tray.

Failure to comply with these requirements could lead to enforcement action, including the issuing of a stop Notice, until the matter has been remedied. Where damage has occurred to legally protected trees, you may be liable for prosecution.

Appendix four - Site notices and additional information

Sites Notices on Fencing

CONSTRUCTION EXCLUSION ZONE
NO ACCESS

NO STORAGE OR OPERATIONS WITHIN FENCED OFF AREAS

NO DIGGING OR TRENCHING
NO STORAGE OF PLANT OR MATERIALS
NO VEHICLE ACCESS
NO FIRE LIGHTING
NO CHEMICAL HANDLING

Pre-printed laminated waterproof signs A3 in size should be fixed securely to fencing panels on each enclosure at 9 metre minimum intervals.

Construction and trees
Why is fencing erected around trees?

1. The major cause of damage to trees on construction sites is due to soil compaction.
2. Roots use the spaces between soil particles to obtain oxygen, water and nutrients.
3. Heavy plant and machinery compresses (compacts) the soil, squashing out the air spaces and preventing root function.
4. A compacted soil structure will stay compacted.
5. Consequently, the tree suffers and will show signs of branch die-back.
6. Symptoms such as die-back may take several years to appear.
7. Soil compaction over roots can be prevented by maintaining a fenced exclusion zone over the tree roots.
8. The exclusion zone distance is calculated using British Standard 5837.
9. Protective fencing is installed at the calculated distance.
10. Protective fencing is a condition of planning approval, if it is removed or repositioned the construction firm is in breach of a condition and may be subjected to legal action.

Common causes of tree death

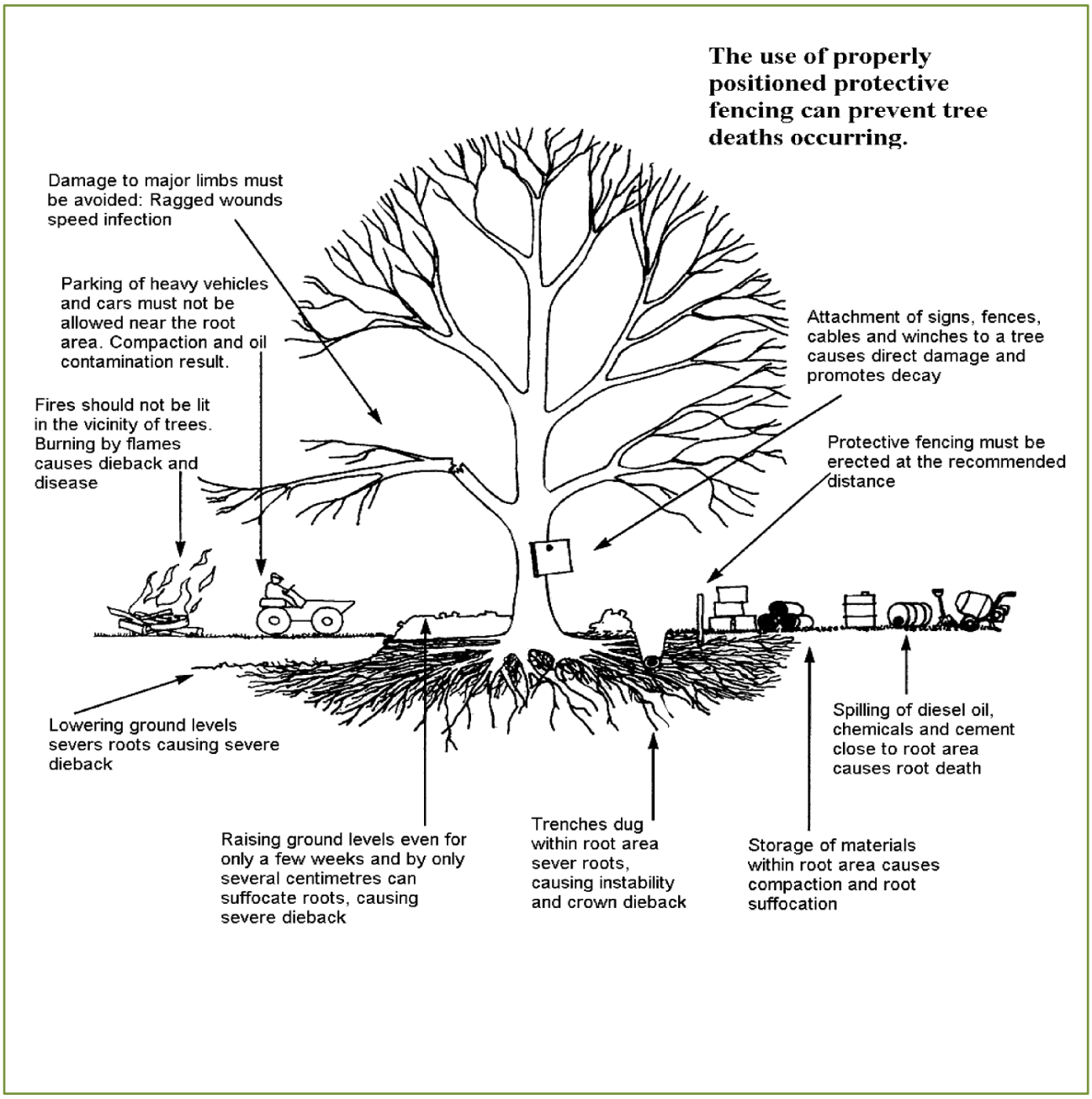

Technical Arboriculture
www.techarb.co.uk

Expert witness

Tree risk assessment surveys

TPO Review

Local Government officer contracts

Woodland management plans

Protected species

Habitat management plans

Technical Arboriculture Limited

Registered Office:
1 Chase Farm Close,
Waltham Chase,
Hampshire,
SO32 2UB

01489 896655
info@techarb.co.uk

Registered in England and Wales No: 6018958

VAT Registration No: 936 3872 90