V3 FUSION & FUSION SCROLL Commercial Condensing Units

Medium & Low Temperature Applications

ISSUE: 01.08.2017

CE

J&E Hall International

Contents

Nomenclature & Standard Product Configuration 3

Specifications
- Unit Data 4

Health & Safety
- General Information 5

Installation
- Unit Location 6
- Installation Clearances 6
- Field Piping 7
- Pipe Size Selection (For EVI Unit Only) 8
- Insulation Selection (For EVI Unit Only) 9
- Expansion Valve Selection (For EVI Unit Only) 9
- Pressure Testing 10
- Evacuation & Charging 10
- Electrical 11

Commissioning
- Pre startup checks 12
- Running the unit 13
- Compressor Operation 13
- Vacuum Operation 13
- System Charge 13
- Safety pressure switch settings 14
- Compressor Operating Pressure 15
- Fan speed controller settings 15
- Units with Microchannel Coils 15
- System Operation 15
- For EVI unit Only 16-17

Drawings
- Unit dimensional drawings 18-20
- Electrical wiring diagrams 21-27

Service & Maintenance 28

F-Gas Information 29

Technical Information
- Fan Speed Controller 30
- Dual Pressure Switch 31

Certification
- Declaration of Conformity & PED Statement 32-35

Nomenclature

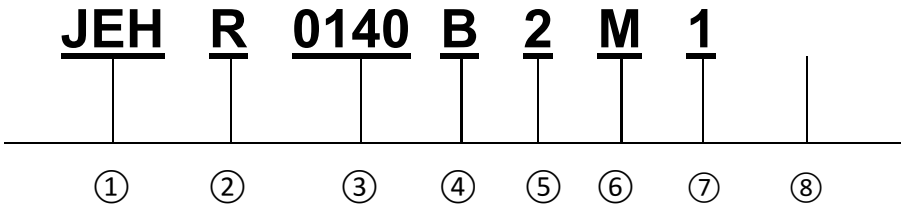

①	J & E Hall International	⑤	Unit Series
②	R: Reciprocating S: Scroll	⑥	M: Medium Temperature L: Low Temperature
③	Approximate HP (0140 = 1.4hp)	⑦	Power Supply: 1: 230V / 1Ph / 50Hz 3: 400V / 3Ph / 50Hz
④	Unit Generation	⑧	EVI (Enhanced Vapour Injection) – LT 0950 Unit Only

Standard product configuration

- Tecumseh and Maneurop reciprocating compressors
- Copeland scroll compressors
- Microchannel condenser coil (S1/S2 units)
- Liquid receiver with fusible plug
- Fitted liquid line drier & sight glass
- Dual LP/HP Pressure control
- Gomax flexible pressure hoses
- External service valves
- IP rated control panel
- Combined mains isolator with short circuit / overload protection
- Fuse protection to fan & control circuit
- Fan speed control (not S1 units)
- Crankcase heater on compressor (not all unit models)
- Alarm output available from HP switch
- Acoustic insulation to compressor compartment

Specifications

	Unit Model	Series	COP / (SEPR)						Compressor			Oil Sep. Charge	Oil Type	Electrical Data					Coil Volume	Liquid Receiver	Airflow	Connections		Dimensions		Unit Dry Weight	SPL @ 10m [d]
														Compressor			Fan Motors										
			R134a	R404A	R407A	R407F	R448A	R449A	Type	Swept Volume	Oil Charge			NC [a]	MCC [b]	LRC [c]	No.	FLC				Liquid	Suction	Unit (W x D x H)	Mounting (W x D)		
										(m³/h)	(Litres)	(Litres)		(A)	(A)	(A)		(A)	(Litres)	(Litres)	(m³/h)	(inch)	(inch)	(mm)	(mm)	(kgs)	dB(A)
Medium Temperature	JEHR-0050-B1-M-1	1	n/a	1.45	1.33	1.47	n/a	1.44	AE4460Z-FZ1C	1.80	0.28	-	A	3.4	5.9	19.4	1	0.4	0.44	1.2	1300	1/4	3/8	876 x 420 x 607	545 x 400	45	29
	JEHR-0067-B1-M-1		n/a	1.61	1.37	1.49	n/a	1.45	CAJ9480Z	2.64	0.89	-		3.1	6.7	22.6	1	0.4	0.44	1.2	1300	3/8	1/2			54	28
	JEHR-0100-B1-M-1		n/a	1.61	1.42	1.51	n/a	1.45	CAJ9510Z	3.18	0.89	-		3.9	8.4	30.0	1	0.4	0.44	1.2	1300	3/8	1/2			54	28
	JEHR-0113-B1-M-1		n/a	1.60	1.52	1.58	n/a	1.53	CAJ9513Z	4.21	0.89	-		4.9	11.3	33.0	1	0.4	0.44	1.2	1300	3/8	1/2			55	28
	JEHR-0140-B2-M-1	2	n/a	1.68	1.57	1.75	n/a	1.96	CAJ4517Z	4.52	0.89	-		5.3	12.7	38.5	1	0.6	0.51	4.5	2700	3/8	1/2	1101 x 444 x 662	703 x 408	68	34
	JEHR-0140-B2-M-3		n/a	1.80	1.50	1.67	n/a	1.88	TAJ4517Z	4.52	0.89	-		2.3	4.0	18.0	1	0.6	0.51	4.5	2700	3/8	1/2			68	34
	JEHR-0150-B2-M-1		1.57	1.78	1.77	1.78	n/a	n/a	MTZ18-5VM	5.26	0.95	-	B	6.5	10.0	40.0	1	0.6	0.51	4.5	2700	3/8	5/8			68	37
	JEHR-0150-B2-M-3		1.71	1.81	1.83	1.85	n/a	n/a	MTZ18-4VM	5.26	0.95	-		2.6	5.0	20.0	1	0.6	0.51	4.5	2700	3/8	5/8			68	37
	JEHS-0200-B2-M-1	2	1.85	2.25	2.13	1.88	1.96	1.96	ZB15KQE-PFJ	5.90	1.24	-	C	7.3	18.5	58.0	1	0.6	0.51	4.5	2700	3/8	3/4	1101 x 444 x 662	703 x 408	70	33
	JEHS-0200-B2-M-3		2.12	2.06	2.07	1.81	1.96	1.96	ZB15KQE-TFD	5.90	1.24	-		2.9	7.0	26.0	1	0.6	0.51	4.5	2700	3/8	3/4			70	33
	JEHS-0250-B2-M-1		2.14	2.00	2.01	1.79	1.87	1.87	ZB19KQE-PFJ	6.80	1.30	-		9.3	20.5	61.0	1	0.6	0.51	4.5	2700	3/8	3/4			72	34
	JEHS-0250-B2-M-3		2.13	2.07	1.95	1.79	1.87	1.87	ZB19KQE-TFD	6.80	1.36	-		4.2	7.0	32.0	1	0.6	0.51	4.5	2700	3/8	3/4			72	34
	JEHS-0300-B2-M-1	3	2.13	1.88	1.89	1.69	1.79	1.79	ZB21KQE-PFJ	8.60	1.45	-		12.2	21.5	82.0	1	0.6	0.51	4.5	2700	3/8	3/4			74	36
	JEHS-0300-B2-M-3		2.10	1.94	1.86	1.65	1.79	1.79	ZB21KQE-TFD	8.60	1.45	-		4.4	10.3	40.0	1	0.6	0.51	4.5	2700	3/8	3/4			74	36
	JEHS-0350-B2-M-1		1.86	(2.26)	n/a	n/a	(2.28)	(2.28)	ZB26KQE-PFJ	9.90	1.50	-		14.8	25.0	97.0	1	0.6	0.51	4.5	2700	3/8	3/4			74	39
	JEHS-0350-B2-M-3		2.08	(2.61)	n/a	n/a	2.28)	2.28)	ZB26KQE-TFD	9.90	1.50	-		5.8	9.0	46.0	1	0.6	0.51	4.5	2700	3/8	3/4			74	39
	JEHS-0350-B3-M-1	3	2.06	(3.06)	(3.38)	(3.13)	(2.97)	(2.97)	ZB26KQE-PFJ	9.90	1.50	-		13.9	25.0	97.0	1	0.9	4.42	7.6	4250	1/2	3/4	1353 x 575 x 872	945 x 500	112	37
	JEHS-0350-B3-M-3		2.29	(3.48)	(3.44)	(3.20)	(2.97)	(2.97)	ZB26KQE-TFD	9.90	1.50	-		5.9	9.0	46.0	1	0.9	4.42	7.6	4250	1/2	3/4			112	37
	JEHS-0400-B3-M-1		2.28	(3.24)	(3.55)	(3.53)	(3.08)	(3.08)	ZB29KQE-PFJ	11.40	1.36	-		16.1	28.0	114.0	1	0.9	4.42	7.6	4250	1/2	7/8			119	37
	JEHS-0400-B3-M-3		2.29	(3.36)	(3.73)	(3.48)	(3.08)	(3.08)	ZB29KQE-TFD	11.40	1.36	-		7.3	11.0	50.0	1	0.9	4.42	7.6	4250	1/2	7/8			119	37
	JEHS-0500-B3-M-3		(2.69)	(3.08)	(3.16)	(3.05)	(2.92)	(2.92)	ZB38KQE-TFD	14.40	2.07	-		8.2	13.5	65.5	1	0.9	4.42	7.6	4250	1/2	7/8			123	38
	JEHS-0600-B3-M-3		(2.63)	(3.08)	(3.15)	(3.09)	(2.90)	(2.90)	ZB45KQE-TFD	17.10	1.89	-		8.7	14.2	74.0	1	0.9	6.89	7.6	4100	1/2	1 1/8			125	40
	JEHS-0680-B3-M-3		(2.57)	(3.04)	(2.90)	(2.87)	(2.62)	(2.62)	ZB48KQE-TFD	18.80	1.80	-		11.4	19.1	101.0	1	0.9	6.89	7.6	4100	1/2	1 1/8			126	40
	JEHS-0800-B4-M-3	4	(3.04)	(3.35)	(3.08)	(2.93)	(2.83)	(2.83)	ZB58KCE-TFD	22.10	2.50	-		11.2	23.0	95.0	2	1.8	8.73	13.6	8500	3/4	1 1/8	1348 x 612 x 1727	940 x 560	222	43
	JEHS-1000-B4-M-4		(3.29)	(3.15)	(2.71)	(2.73)	(2.77)	(2.77)	ZB76KCE-TFD	29.10	3.20	-		14.4	28.0	118.0	2	1.8	8.73	13.6	8500	3/4	1 3/8			226	43
Low Temperature	JEHR-0175-B2-L-1	2	n/a	1.00	n/a	n/a	n/a	n/a	NTZ048-5VM	8.40	0.95	0.50	B	4.5	11.0	37.0	1	0.6	0.51	4.5	2700	3/8	5/8	1101 x 444 x 662	703 x 408	73	37
	JEHR-0175-B2-L-3		n/a	1.11	n/a	n/a	n/a	n/a	NTZ048-4VM	8.40	0.95	0.50		2.1	4.8	16.0	1	0.6	0.51	4.5	2700	3/8	5/8			72	37
	JEHR-0225-B2-L-1		n/a	1.04	n/a	n/a	n/a	n/a	NTZ068-5VM	11.80	0.95	0.50		9.2	17.0	53.0	1	0.6	0.51	4.5	2700	3/8	5/8			75	40
	JEHR-0225-B2-L-3		n/a	1.11	n/a	n/a	n/a	n/a	NTZ068-4VM	11.80	0.95	0.50		3.5	8.4	25.0	1	0.6	0.51	4.5	2700	3/8	5/8			74	40
	JEHS-0200-B2-L-3	2	n/a	0.97	0.89	0.93	0.86	0.86	ZF06K4E-TFD	5.90	1.30	0.50	C	2.7	6.0	26.0	1	0.6	0.51	4.5	2700	3/8	3/4	1101 x 444 x 662	703 x 408	76	32
	JEHS-0300-B2-L-3		n/a	1.09	0.85	0.91	0.92	0.92	ZF09K4E-TFD	8.00	1.50	0.50		3.8	6.5	40.0	1	0.6	0.51	4.5	2700	3/8	3/4			78	33
	JEHS-0400-B3-L-3	3	n/a	(1.88)	(1.67)	(1.65)	(1.67)	(1.67)	ZF13K4E-TFD	11.80	1.90	0.60		4.9	10.0	51.5	1	0.9	4.42	7.6	4250	1/2	7/8	1353 x 575 x 872	945 x 500	132	37
	JEHS-0500-B3-L-3		n/a	(1.79)	(1.67)	(1.64)	(1.53)	(1.53)	ZF15K4E-TFD	14.50	1.90	0.60		6.7	12.0	64.0	1	0.9	4.42	7.6	4250	1/2	7/8			132	39
	JEHS-0600-B3-L-3		n/a	(1.80)	(1.52)	n/a	(1.53)	(1.53)	ZF18K4E-TFD	17.10	1.90	0.60		7.6	12.5	74.0	1	0.9	4.42	7.6	4250	1/2	7/8			133	41
	JEHS-0750-B4-L-3	4	n/a	(1.82)	(1.51)	n/a	(1.64)	(1.64)	ZF25K5E-TFD	21.40	1.90	0.60		6.9	16.6	102.0	2	1.2	4.14	13.6	5750	1/2	1 1/8	1348 x 605 x 1727	940 x 560	203	41
	JEHS-0950-B4-L-3 EVI		n/a	(1.79)	(1.76)	(1.63)	(1.76)	(1.76)	ZF18KVE-TFD EVI	17.10	1.90	0.60		7.3	13.0	74.0	2	1.2	8.70	13.6	5870	1/2	7/8			200	37

Oil Type A = Uniqema Emkarate RL32CF / **Oil Type B** = Maneurop Ester 160PZ / **Oil Type C** = Polyolester Oil - (Copeland Ultra 22 CC, Copeland Ultra 32 CC, Copeland Ultra 32-3MAF, Mobil EAL Arctic 22CC, Uniqema Emkarate RL32CF)

[a] NC = Nominal Current @ condition -10°Cte / +32°Cta MT and -35°Cte / +32°Cta LT with R404A refrigerant

[b] MCC = Maximum Continuous Current

[c] LRC = Locked Rotor Current

[d] Sound Pressure Level measured in an anechoic room (-10/+32°C) MT & (-25/+32°C) LT conditions. Alternative conditions may produce different results

Health and Safety

Important Note:

Only qualified personnel, who are familiar with refrigeration systems and components including all controls, should perform the installation and start-up of the system. To avoid potential injury, use care when working around coil surfaces or sharp edges of metal cabinets. All piping and electrical wiring should be installed in accordance with all applicable standards and local by-laws.

General information

Before Installation

- Ensure the units received are the correct models for the intended application.
- Ensure the refrigerant; electrical supply and MWP are all suitable for the proposed application.
- Check there is no damage to the units. Any damage should be advised to the supplier immediately.
- Check that the proposed equipment locations are suitable and provide adequate support for the weight of the units.

Offloading and Lifting

- Whenever a condensing unit is lifted, it should be from the base and, where possible, all packing and protection is kept in position.
- If lifting equipment is required, ensure that it is suitable, certificated, and that the operatives are qualified to use it.
- When using a fork-lift or pallet truck to lift the unit, the two support points should be sufficiently apart to give stability when lifting and suitably placed to distribute the load on the forks.
- If slings are used, care should be taken to ensure that the slings do not crush the casework or coil.
- When lifting by crane, use spreader bars to prevent compressing the top of the equipment.
- Do not drop the unit. Should this inadvertently happen, it should be immediately unpacked and inspected for damage.
- Use the appropriate spreader bars/lifting sling with the holes and lugs provided.

During Installation and subsequent maintenance

- Installation and maintenance are to be performed only by qualified personnel who are familiar with local codes and regulations, and experienced with this type of equipment.
- If lifting equipment is required, ensure that it is suitable for purpose, certificated and that the operatives are qualified to use it.
- Safe working methods are identified and operatives have suitable Personal Protective Equipment (PPE).
- Ensure the working area has adequate ventilation during brazing procedures.
- The units contain moving machinery and electrical power hazards, which may cause severe injury or death. Disconnect and shut off power before installation or service of the equipment.
- Refrigerant release into the atmosphere is illegal. Proper evacuation, recovery, handling and leak testing procedures must be observed at all times.
- Units must be earthed.
- No maintenance work should be attempted prior to disconnecting the electrical supply.
- The electrical covers and fan guards must remain fitted at all times.
- Use of the units outside of the design conditions and the application for which the units were intended may be unsafe and be detrimental to the units, regardless of short or long term operation.
- The units are not designed to withstand loads or stresses from other equipment or personnel. Such extraneous loads or stress may cause failure/leak/injury.

Installation

Unit location

- In order to achieve maximum cooling capacity, the installation location for the condensing unit should be carefully selected.

- Install the condensing unit in such a way so that hot air ejected by the condensing unit cannot be drawn in again (short circuit of hot discharge air). Allow sufficient space for maintenance around the unit.

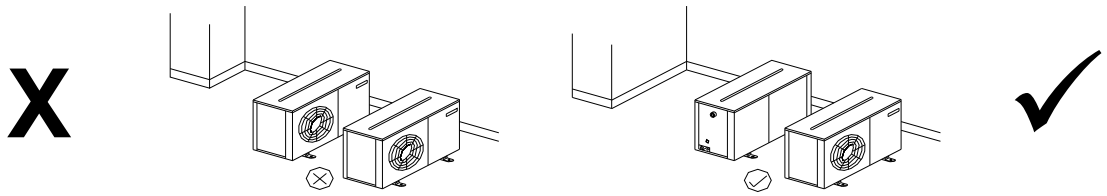

- Ensure that there is no obstruction to air flow into or out of the unit. Remove obstacles which block air intake or discharge.

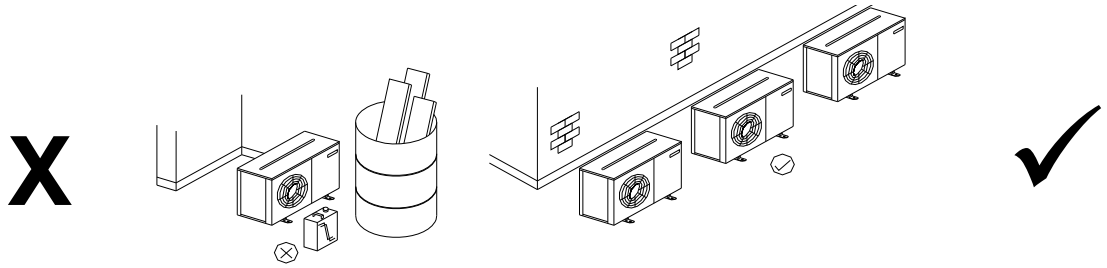

- The location must be well ventilated, so the unit can draw in and distribute plenty of air thus lowering the condensing temperature.
- To optimize the unit running conditions, the condenser coil must be cleaned at regular intervals.
- The unit must be level in all directions.

Installation clearances

- The installation location should allow sufficient space for air flow and maintenance around the unit.

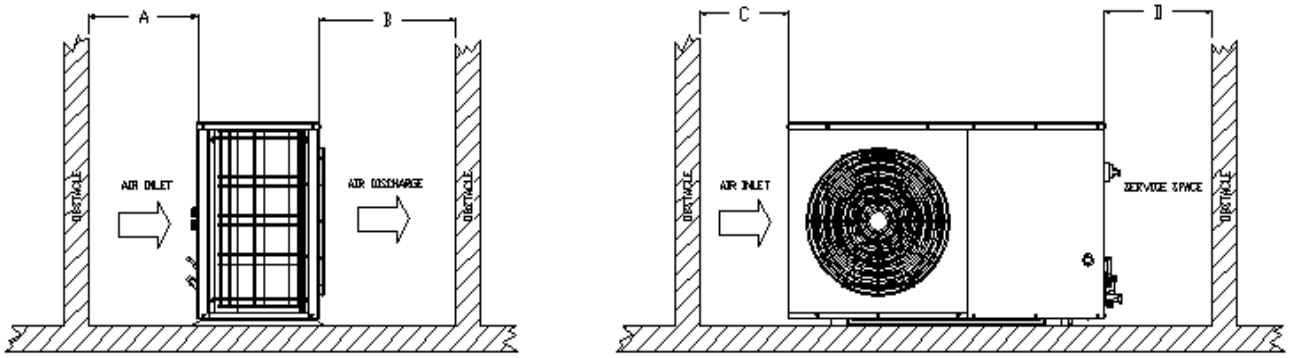

ALL MODELS	A	B	C	D
Minimum Distance	300 mm	1000 mm	300 mm	500 mm

Installation

Field piping

Important Note:

Pipe sizing should only be determined by qualified personnel. Correct line sizing will minimize the pressure drop and maintain sufficient gas velocity for proper oil return. All applicable standards must be observed in the installation of refrigerant piping.

To ensure satisfactory operation and performance, the following points should be noted:

- Pipework routes must be as simple and as short as possible.
- Avoid low points on pipework where oil can accumulate.
- Suction gas velocity must be sufficient to ensure good oil return.
- Use only clean, dehydrated refrigeration grade copper tube with long radius bends.
- Avoid flare type connections and take great care when brazing. Use only silver alloy rods.
- Run braze without over filling to ensure there is no leakage into the tube.
- To prevent oxidation, blow oxygen free nitrogen through pipework when brazing.
- Install insulation on all suction lines and on all pipes penetrating walls or passing through hot areas.
- Adequately support all pipe work at a maximum of 2 metre intervals.
- Where the condensing unit is situated below the indoor unit (coldroom evaporator / display case), the height difference between the two units should be no more than 6 metres.
- In vertical pipework, the use of U-trap and double suction risers is often required. These suction risers must always be fitted with a U-trap at the bottom and a P-trap at the top and never be higher than 4m unless a second U-trap system is fitted.
- Additional oil may be required if piping length exceeds 20m or multiple oil traps are fitted. Check the oil level closely during commissioning and add oil as necessary. Add oil in small amounts. Do not overfill the compressor!
- When installing a single compressor condensing unit with multiple evaporators connected which operate independently, care should be taken to ensure that the evaporating pressure/temperature does not fall outside the compressor operating limit at minimum load. If there is a potential for this scenario, consider multiple evaporators fed by a single solenoid valve or separate condensing units.
- Suction pipework should slope gently back towards the unit to assist oil return to the compressor. A fall of approximately 2cm per metre of pipework is acceptable.
- Liquid lines should be sized to ensure a full supply of liquid refrigerant to the expansion device. Careful attention should be paid to sizing of liquid lines on large risers (maximum rise 6m).
- In some circumstances, a suction accumulator (not supplied) may be required. It offers protection against refrigerant flood back during operation and also against off-cycle migration by adding internal free volume to the low side of the system.
- Tests must be conducted to ensure the amount of off-cycle migration to the compressor does not exceed the compressor's charge limit.
- Wherever possible the system should be installed to utilize a pump down configuration.
- An MOP expansion valve is recommended for all Low Temperature installations.
- Maximum recommended pipe length is 25m for Reciprocating units and 50m for Scroll units.

Important Note:

One of the main factors affecting equipment reliability and compressor service life is refrigeration circuit contamination. During installation, circuit contamination can be caused by:

- Brazing & Welding Oxides
- Filings & Particles from de-burring pipework
- Brazing Flux
- Moisture & Air

Installation

Pipe size selection (For EVI unit only)

Sizing of liquid and suction lines for EVI model will be different from standard scroll models. Piping sizes of this model need to follow the recommended correction coefficient of cooling capacity. This is vital as if the pipework selected is oversized, especially for the suction pipe, the gas velocity will be decreased at low mass flow rate / low evaporating temperature, causing oil return problems. Undersized suction lines will also cause decreased capacity due to increased pressure drop.

The correction factor of refrigerant R404A is shown as below table:

Ta \ Te	(Watts)	-40	-35	-30	-25	-20
27	CF	0.64	0.66	0.68	0.70	0.72
32	CF	0.61	0.63	0.65	0.67	0.69
35	CF	0.59	0.61	0.63	0.65	0.67
38	CF	0.57	0.59	0.61	0.63	0.65
43	CF	0.54	0.55	0.57	0.58	0.60

For instance,

At condition of Te -35°C, Ta +32°C
Refrigerant R404A
Published cooling capacity = 5.9kW.

Cooling capacity = Correction factor x Published cooling capacity
= 0.63 x 5.9 kW
= **3.707kW**

Therefore, the pipe sizes should be selected against the **corrected** capacity of 3.71kW.

The correction factor of refrigerant R407A is shown as below table:

Ta \ Te	(Watts)	-40	-35	-30	-25	-20
27	CF	0.73	0.73	0.73	0.73	0.73
32	CF	0.68	0.69	0.69	0.70	0.70
35	CF	0.65	0.66	0.67	0.67	0.68
38	CF	0.62	0.63	0.64	0.65	0.66
43	CF	0.57	0.58	0.60	0.61	0.63

The correction factor of refrigerant R407F is shown as below table:

Ta \ Te	(Watts)	-40	-35	-30	-25	-20
27	CF	0.72	0.73	0.73	0.73	0.72
32	CF	0.68	0.68	0.69	0.69	0.69
35	CF	0.65	0.66	0.66	0.67	0.67
38	CF	0.62	0.63	0.64	0.65	0.65
43	CF	0.57	0.58	0.60	0.61	0.62

The correction factor of refrigerant R448A/R449A is shown as below table:

Ta \ Te	(Watts)	-40	-35	-30	-25	-20
27	CF	0.71	0.72	0.71	0.72	0.72
32	CF	0.67	0.68	0.68	0.68	0.69
35	CF	0.65	0.65	0.65	0.66	0.67
38	CF	0.62	0.63	0.63	0.64	0.65
43	CF	0.58	0.59	0.59	0.60	0.61

Installation

Insulation selection (For EVI unit only)

The liquid pipe connecting CCU service valve to the evaporator must be well insulated with recommended wall thickness of minimum ¾''.

Expansion valve selection (For EVI unit only)

The lower liquid temperature of the EVI unit can increase evaporator expansion valve capacities**.** Selection of the expansion valve needs to be done based on the expected amount of sub-cooling shown in below tables:

(A.) **R404A**

	Amount of Sub-cooling (K)				
Ta\Te	**-40**	**-35**	**-30**	**-25**	**-20**
27	39.9	36.9	33.9	30.9	27.9
32	40.9	37.9	34.9	31.9	28.9
35	41.5	38.5	35.5	32.5	29.5
38	42.1	39.1	36.1	33.1	30.1
43	43.1	40.1	37.1	34.1	31.1

(B.) **R407A**

	Amount of Sub-cooling (K)				
Ta\Te	**-40**	**-35**	**-30**	**-25**	**-20**
27	33.1	32.8	32.4	32.1	31.8
32	38.0	37.0	35.9	34.9	33.8
35	41.0	39.5	38.0	36.5	35.0
38	43.9	42.0	40.1	38.1	36.2
43	48.9	46.2	43.5	40.9	38.2

(C.) **R407F**

	Amount of Sub-cooling (K)				
Ta\Te	**-40**	**-35**	**-30**	**-25**	**-20**
27	33.8	33.5	33.1	32.8	32.5
32	38.8	37.8	36.7	35.7	34.6
35	41.9	40.4	38.8	37.3	35.8
38	44.9	42.9	41.0	38.9	37.0
43	50.0	47.2	44.5	41.8	39.0

(D.) **R448A/R449A**

	Amount of Sub-cooling (K)				
Ta\Te	**-40**	**-35**	**-30**	**-25**	**-20**
27	33.1	32.8	32.4	32.1	31.8
32	37.9	36.9	35.8	34.8	33.8
35	40.9	39.4	37.9	36.4	34.9
38	43.8	41.9	40.0	38.0	36.1
43	48.8	46.1	43.4	40.8	38.1

Installation

Pressure testing

The condensing units are pressure tested in the factory prior to dispatch. All units come with a holding charge of oxygen free nitrogen.

Once the pipework installation is complete, it should be pressure tested prior to evacuation to test for leaks.
A pressure leak test should be carried out using oxygen free nitrogen (OFN). NEVER USE OXYGEN FOR PRESSURE TESTING SYSTEMS. A calibrated nitrogen pressure regulator must always be used. Before starting any pressure testing, ensure the area surrounding the system is safe, inform relevant personnel and fit warning signs indicating high pressure testing. Also, use correct PPE as required.

Always pressurize the system slowly, preferably in stages up to the maximum required pressure. Maximum test pressures applicable to the unit are as follows:

Test pressure	
High side	**Low side**
28 barG (405 psiG)	**19 barG (275 psiG)**

Listen for any possible leaks and check all joints with bubble spray. If any leaks are discovered, release pressure slowly from system until empty, repair leak and then restart pressure testing procedure. Never attempt to repair a leak on a pressurized system.
A strength test should also be incorporated (to installed pipework only) according to applicable standards.
Once testing has been completed satisfactorily, release the pressure from the system gradually and safely to external atmosphere.

Evacuation & Charging

Important Note:

Moisture prevents proper functioning of the compressor and the refrigeration system. Ensure that a good quality vacuum pump is used to pull a minimum vacuum of 250 microns (0.25 torr).

Once pressure testing has been completed, the system can now be evacuated to remove air and any moisture from the piping. This can be done as follows:

- Ensure any nitrogen charge is safely released from the system.
- Connect a gauge manifold to the connections on the service valves on the condensing unit.
- Connect a vacuum pump and vacuum gauge to the system.
- Ensure all gauge manifold and service valves are open as required.
- Evacuate the system until vacuum is below 250 microns (0.25 torr).

Note: A triple evacuation procedure is recommended for all new systems or where moisture is suspected.

Once the system is isolated and the vacuum pump is switched off, any rise in pressure indicates that either there may be a leak in the system or moisture is still present. In this case, recheck the system for leaks, repair as necessary, and then restart the evacuation procedure. Once completed satisfactorily, the vacuum pump and vacuum gauge can be removed.

At this point, the refrigerant charge can be added to the system as required. Refrigerants must be charged in the liquid phase. **Charging of liquid into the suction side of the system should ONLY be done with a metering device.** Use calibrated weighing scales to record the amount of refrigerant added to the system.

Installation

Electrical

Important Note:

The mains electrical supply to the condensing unit must be via a suitable motor rated circuit breaker or fuse. A mains isolator is fitted to all condensing units therefore an additional isolator is not required unless site conditions or regulations dictate differently.

J & E Hall Fusion condensing units require either a 230 volt / 1 phase / 50Hz supply or a 400 volt / 3 phase / 50Hz supply, both of which must include a Neutral and an Earth. These systems are not suitable for any other supply voltages (other than a deviation of +/- 10% of the above values) and are not suitable for 60Hz supplies.

When utilizing a three phase supply, ensure that the compressor motor rotates in the correct direction (Fusion Scroll models only). See note on page 13.

Mains cable type and sizing must be selected for the particular application and the electrical installation should conform to the current local standards.

- Cables to the condensing unit should wherever possible be routed through the cable glands supplied on the rear of the units.
- Connect the mains supply to the units as per the wiring diagrams on pages 21 – 27.

To gain access to the electrical box, turn the mains isolator switch on the unit to the OFF position, loosen the two screws on the left hand side of the door and open door. The electrical box is located behind the door. Remove the screws in the electrical box cover to access components.

Commissioning

Pre startup checks

Before starting the condensing unit the following checks should be carried out as a minimum:

- Check electrical supply is correct and all connections are sound.
- All moving parts are free and guards fitted.
- Check all mechanical connections for tightness – especially compressor rotalocks.
- Compressor oil level satisfactory.
- Initial settings for safety switches and fan speed control.
- Overload set correctly.
- All valves in correct operating position.
- Initial refrigerant charge.
- Crankcase heater (where fitted) energized for a minimum of 12 hours before compressor start-up.
- Gauge manifold connected to both low and high sides of system.
- Check the tightness of rotolock connection based on recommended torque setting shown in below table.

	Unit Model	Series	Compressor Model	Rotolock (Suction) Thread: Tightening Torque (N.m)	Rotolock (Discharge) Thread: Tightening Torque (N.m)
Medium Temperature	JEHR-0050-B1-M-1	1	AE4460Z-FZ1C	NOT APPLICABLE (BRAZED- CONNECTION)	
	JEHR-0067-B1-M-1		CAJ9480Z		
	JEHR-0100-B1-M-1		CAJ9510Z		
	JEHR-0113-B1-M-1		CAJ9513Z		
	JEHR-0140-B2-M-1	2	CAJ4517Z		
	JEHR-0140-B2-M-3		TAJ4517Z		
	JEHR-0150-B2-M-1		MTZ18-5VM	1"-14 UNS (70-80N.m)	
	JEHR-0150-B2-M-3		MTZ18-4VM		
	JEHS-0200-B2-M-1	2	ZB15KQE-PFJ	NOT APPLICABLE (BRAZED-CONNECTION)	
	JEHS-0200-B2-M-3		ZB15KQE-TFD		
	JEHS-0250-B2-M-1		ZB19KQE-PFJ		
	JEHS-0250-B2-M-3		ZB19KQE-TFD		
	JEHS-0300-B2-M-1		ZB21KQE-PFJ		
	JEHS-0300-B2-M-3		ZB21KQE-TFD		
	JEHS-0350-B2-M-1		ZB26KQE-PFJ		
	JEHS-0350-B2-M-3		ZB26KQE-TFD		
	JEHS-0350-B3-M-1	3	ZB26KQE-PFJ		
	JEHS-0350-B3-M-3		ZB26KQE-TFD		
	JEHS-0400-B3-M-1		ZB29KQE-PFJ		
	JEHS-0400-B3-M-3		ZB29KQE-TFD		
	JEHS-0500-B3-M-3		ZB38KQE-TFD		
	JEHS-0600-B3-M-3		ZB45KQE-TFD		
	JEHS-0680-B3-M-3		ZB48KQE-TFD		
	JEHS-0800-B4-M-3	4	ZB58KCE-TFD	1-3/4"-12UNF (135-160 N.m)	1-1/4"-12UNF (110-135 N.m)
	JEHS-1000-B4-M-3		ZB76KCE-TFD		
Low Temperature	JEHR-0175-B2-L-1	2	NTZ048-5VM	1-1/4"-12UNF (110-135 N.m)	1"-14 UNS (70-80N.m)
	JEHR-0175-B2-L-3		NTZ048-4VM		
	JEHR-0225-B2-L-1		NTZ068-5VM		
	JEHR-0225-B2-L-3		NTZ068-4VM		
	JEHS-0200-B2-L-3	2	ZF06K4E-TFD		
	JEHS-0300-B2-L-3		ZF09K4E-TFD		
	JEHS-0400-B3-L-3	3	ZF13K4E-TFD		
	JEHS-0500-B3-L-3		ZF15K4E-TFD		
	JEHS-0600-B3-L-3		ZF18K4E-TFD		
	JEHS-0750-B4-L-3	4	ZF25K5E-TFD		1-1/4"-12UNF (110-135 N.m)
	JEHS-0950-B4-L-3 EVI		ZF18KVE-TFD-EVI		1"-14 UNS (70-80N.m)

Commissioning

Running the unit

- Run the unit and check compressor and condenser fan operation.
- Check system pressures and temperatures, gas charge and running currents of motors to ensure correct operation.
- Check compressor suction superheat. This should be between 10K and 20K at normal operating conditions.
- Final adjustment of safety switches settings and fan speed control.
- Allow the system to run for 3 – 4 hours. Check compressor oil level and top up with the correct oil type as required (see page 4). Recheck the compressor oil level again after 24 hours operation.
- Carry out final leak test and ensure all panels/covers are fitted and screws tightened.
- Log all information along with the system model and serial numbers for future reference.
- Complete refrigerant labelling to comply with F-Gas regulations.
- Ensure that the customer / responsible person are provided with basic operating instructions and where electrical isolators are situated in case of emergency.

Important Note:

There must be no more than 10 compressor starts per hour. A higher number reduces the service life of the compressor and can cause carry-over of oil into the system. If necessary, use an anti-short-cycle timer in the control circuit. A minimum 2 minute runtime after each start of the compressor and a 3 minute idle time after each stop are recommended. Only during the pump down cycle may the compressor run for much shorter intervals.

Compressor operation

Scroll compressor motors are designed to run only in one direction. This is not an issue with single phase compressors as they will always run in the correct direction. The correct rotation of a three phase compressor motor depends on the connection of the three incoming phases to the unit. Correct rotation can be determined by a drop in suction pressure and a rise in discharge pressure when the compressor is energized. Running the compressor for a short period of time in reverse direction will have no negative impact but prolonged running in reverse direction may cause premature failure. **To reverse the rotation of a three phase scroll compressor, shut off the incoming power supply to the unit, swap connection of any two of the three incoming phases at the unit isolator, reapply power to the unit and following compressor restart, recheck operating pressures.**

Vacuum operation

Do not operate scroll compressors in a vacuum condition, as this will cause the scrolls to overheat very quickly causing premature failure.

System charge

Ensure an adequate liquid charge has been introduced to the high side of the system before starting to ensure a minimum operating pressure on the suction side of 0.5 bar is maintained, otherwise overheating of the scrolls and subsequent damage may occur.

Commissioning

Safety pressure switch settings

The Saginomiya DNS HP/LP pressure switch fitted to all JEH model condensing units with auto reset for low pressure and manual reset for high pressure is **NOT** factory preset. **BOTH THE LP AND HP SWITCH SETTINGS MUST BE ADJUSTED TO SUIT THE APPLICATION BEFORE STARTING THE UNIT.** Be sure that the high pressure setting does not exceed the receiver's maximum service pressure.

High pressure safety

The high pressure safety switch is required to stop the compressor should the discharge pressure exceed the values shown in the following table. The high pressure switch can be set to lower values depending on the application and ambient conditions.

Unit Series	Compressor	AE/CAJ/TAJ	AE/CAJ/TAJ
	Refrigerant	R404A/R407A/R407F/R449A	R134a
S1/S2	Max. HP Set	27 bar	n/a
Unit Series	Compressor	MTZ	MTZ
	Refrigerant	R404A/R407A/R407F	R134a
S2	Max. HP Set	27 bar	18 bar
Unit Series	Compressor	ZB/ZF	ZB
	Refrigerant	R404A/R407A/R407F/R448A/R449A	R134a
S2/S3/S4	Max. HP Set	27 bar	18 bar

Low pressure safety

The low pressure safety switch protects the compressor against deep vacuum operation, a potential cause of failure due to internal arcing and also operation outside the compressor limits.
The low pressure safety cut out should never be set below the settings as shown in the following table. For systems without pump-down the LP switch signal contact shall be used to energize a low pressure safety alarm.

Compressor Model	AE/CAJ/TAJ		MTZ		ZB		NTZ	ZF
Unit Series	1& 2		2		2 & 3 & 4		2	2 & 3 & 4
Refrigerant	R404A R407A R407F R449A	R134a	R404A R407A R407F	R134a	R404A R407A R407F R448A R449A	R134a	R404A R407A R407F	R404A R407A R407F R448A R449A
Application	M*	M*	M*	M*	M*	M*	L*	L*
Min. Cut Out (barG)	1.5	0.5	1	0.6	2	0.6	0.1	0.3
Min. Cut Out (psi)	22	7	15	9	30	9	2	5

Commissioning

Compressor operating pressures

Compressor operating pressures should be kept within the following limits:

Recommended compressor working pressure range

Compressor Model	AE/CAJ/TAJ		MTZ		ZB		NTZ	ZF
Unit Series	1 & 2		2		2 &3 & 4		2	2 & 3 & 4
Refrigerant	R404A R407A R407F R449A	R134a	R404A R407A R407F	R134a	R404A R407A R407F R448A R449A	R134a	R404A	R404A R407A R407F R448A R449A
Application	M*	M*	M*	M*	M*	M*	L*	L*
High Side (barG)	13.2 ~ 27.7	n/a	13.2 ~ 27.7	7.9 ~ 15.8	7.1 ~ 27.7	6.6 ~ 15.8	13.2 ~ 27.7	13.2 ~ 27.7
Low Side (barG)	1.5 ~ 8.3	n/a	1.0 ~ 7.2	0.6 ~ 4.7	2.0 ~ 7.1	0.6 ~ 3.8	0.1 ~ 3.3	0.1 ~ 3.3

M* Medium Temperature L* Low Temperature

XGE Fan Speed Controller

The fan speed controller is factory set to 19 bar for operation with R4*** series refrigerant to ensure compressor always operates within envelope at all declared working condition. This can be adjusted to suit site conditions / application or alternative refrigerants as described on page 31. The XGE controls are set to stop fan at Pmin. Recommended settings to gain higher energy efficiency as published in the Ecodesign data are as follows:

Medium Temperature

Refrigerant	R404A/R407A/R407F/R448A/R449A		R134a
Setting	Series 2	19	13
	Series 3	10	13
	Series 4	10	10

Low Temperature

Refrigerant	R404A/R407A/R407F/R448A/R449A	
Setting	JEHR Models- Series 2	19
	JEHS Models - Series 2 & 3 & 4 (except EVI)	13
	JEHS Models - EVI unit	17

Clockwise: Increase pressure set point
Anticlockwise: Decrease pressure set point

360 ^{0} = 1 turn

Approx. 1.5 barG

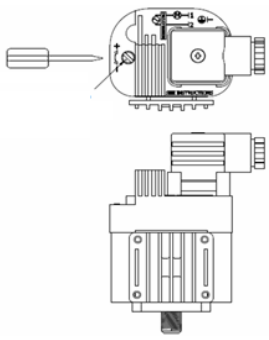

Units with microchannel condenser coils

Care must be taken during charging a unit with refrigerant when a microchannel condenser coil is fitted. Because the microchannel coils hold less refrigerant than traditional fin/tube coils, it is easier to overcharge, especially if the system is commissioned during winter time when the ambient temperature is colder. If too much refrigerant is added, this may cause tripping of the high pressure switch in warmer weather. Always check that the amount of condenser sub cooling is not excessive which may indicate refrigerant overcharge.

System operation

Once the system is correctly charged with refrigerant and the operating condition is stable, check that the compressor suction superheat is between 10K and 20K and that the compressor discharge temperature is between 50°C and 90°C. A suction superheat that is too low may indicate liquid refrigerant return to the compressor, whereas a suction superheat that is too high will not provide enough cooling effect for the compressor and will also cause high discharge temperatures. In either case, it is likely that compressor damage/failure will occur.

Commissioning

For EVI unit only:

Controller EXD-HP1

The controller EXD-HP1 used in the Series 4 EVI unit operates as an economizer control. The setting of controller is preset by the factory and is password protected. Users are not allowed to change any settings in the controller.

Safety Instructions:

1. Read installation instruction carefully. Failure to comply can result in device failure, system damage or personal injury.
2. Only person having appropriate knowledge and skill are allowed to manipulate the controller.
3. Disconnect all voltages from system before installation.

Electrical Installation

- Do not operate system before all cable connections are completed.
- Refer to wiring diagram for electrical connections.
- Class II category transformer is required for 24VAC power supply
- Do not connect any EXD-HP1 input to main voltage as it will permanently damage the controller.
- When connecting wires of expansion valve and pressure sensor, consider color coding as follow:

1. EXM : BR: BROWN; BL: BLUE, OR: ORANGE; YE: YELLOW; WH: WHITE
2. PT5 : BN: BROWN; WH: WHITE

Display/ keypad unit (LEDs and button functions)

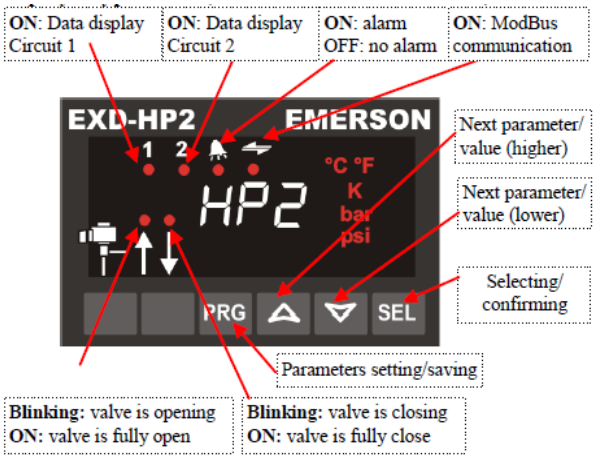

- In standard mode the superheat is shown at the display. In case of liquid injection and economizer function this changes to discharge temperature.
- To display other data of EXD-HP1 press “SEL” button for 1 second until index number according to below table appears. Release “SEL” button and the next variable data will appears. By repeating the procedure variable data can be displayed in sequence as measured superheat (K) → Measured suction pressure (bar) → valve position (%) → Measured suction gas temperature (°C) → Calculated saturated temperature (°C) → Measured discharge temperature (°C) (if economizer function is selected) → REPEATING

Commissioning

Variable data	Controller EXD-HP1
Default Superheat, K	1 1
Suction pressure, bar	1 0
Valve position, %	1 0
Suction gas temperature, °C	1 0
Saturation temperature, °C	1 0
Discharge temperature, °C	1 0

Digital input Di1/Di2

- The digital input Di1 is the interface between controller EXD-HP1 and system controller if Modbus communication has not been used.
- The digital status is dependent to operation of system's compressor or demand.

Operating Condition	Digital input status
Compressor starts	Closed (Start)
Compressor stops	Open (Stop)

Manual mode operation

Warning: All alarms are disabled during manual control. We do not recommend unattended operation of system during manual control.

- Press PRG and ▼ together for 5 seconds to access to manual mode operation.
- List of parameters in scrolling sequence by pressing ▼ button

Code	*Parameter description and choices*	*Min*	*Max*	*Factory setting*	*Field setting*
1Ho	Manual mode operation; circuit 1 0 = disabled; 1 = Enabled	0	1	0	
1HP	Valve opening (%)	0	100	0	
2Ho	Manual mode operation; circuit 2 0 = disabled; 1 = Enabled	0	1	0	
2HP	Valve opening (%)	0	100	0	

Manual alarm reset clearing functional alarms (except hardware error)

- **Press PRG and SEL together for 5 seconds. When the clearing is done, "CL" message appears for 2 seconds.**

EXD – HP1 Error/ Alarm handling

Alarm code	Description	Related parameter	Valve	What to do?	Requires manual reset after resolving alarm
1E0/2E0	Pressure sensor 1/2 error	-	Fully close	Check wiring connection and measure the signal 4 to 20 mA	No
1E1/2E0	Temperature sensor 1/2 error	-	Fully close	Check wiring connection and measure the resistance of sensor	No
1Ed	Discharge hot gas temperature sensor 3 error	-	Operating	Check wiring connection and measure the resistance of sensor	No
1AII/2AII	EXM/EXL electrical connection error	-	-	Check wiring connection and measure the resistance of winding	No
1Ad	Discharge hot gas temperature above limit		Operating	Check valve opening/ check liquid flow for flash gas free/check discharge hot gas temperature sensor	No
AF	Freeze protection	1P4/2P4: 1	Fully close	Check the system for cause of low pressure such as insufficient load on evaporator	No
AF blinking		1P4/2P4: 2	Fully close		Yes
AL	Low superheat (<0,5K)	1uL/2uL: 1	Fully close	Check wiring connection and operation of valve	No
AL blinking		1uL/2uL: 2	Fully close		Yes
AH	High superheat	1uH/2uH: 1	Operating	Check the system	No
AP	Low pressure	1P9/2P9: 1	Operating	Check the system for cause of low pressure such as refrigerant loss	No
AP blinking		1P9/2P9: 2	Operating		Yes

Dimensional Drawings

JEHR-0050-B1-M-1, JEHR-0067-B1-M-1, JEH2-0100-B1-M-1, JEHR-0113-B1-M-1

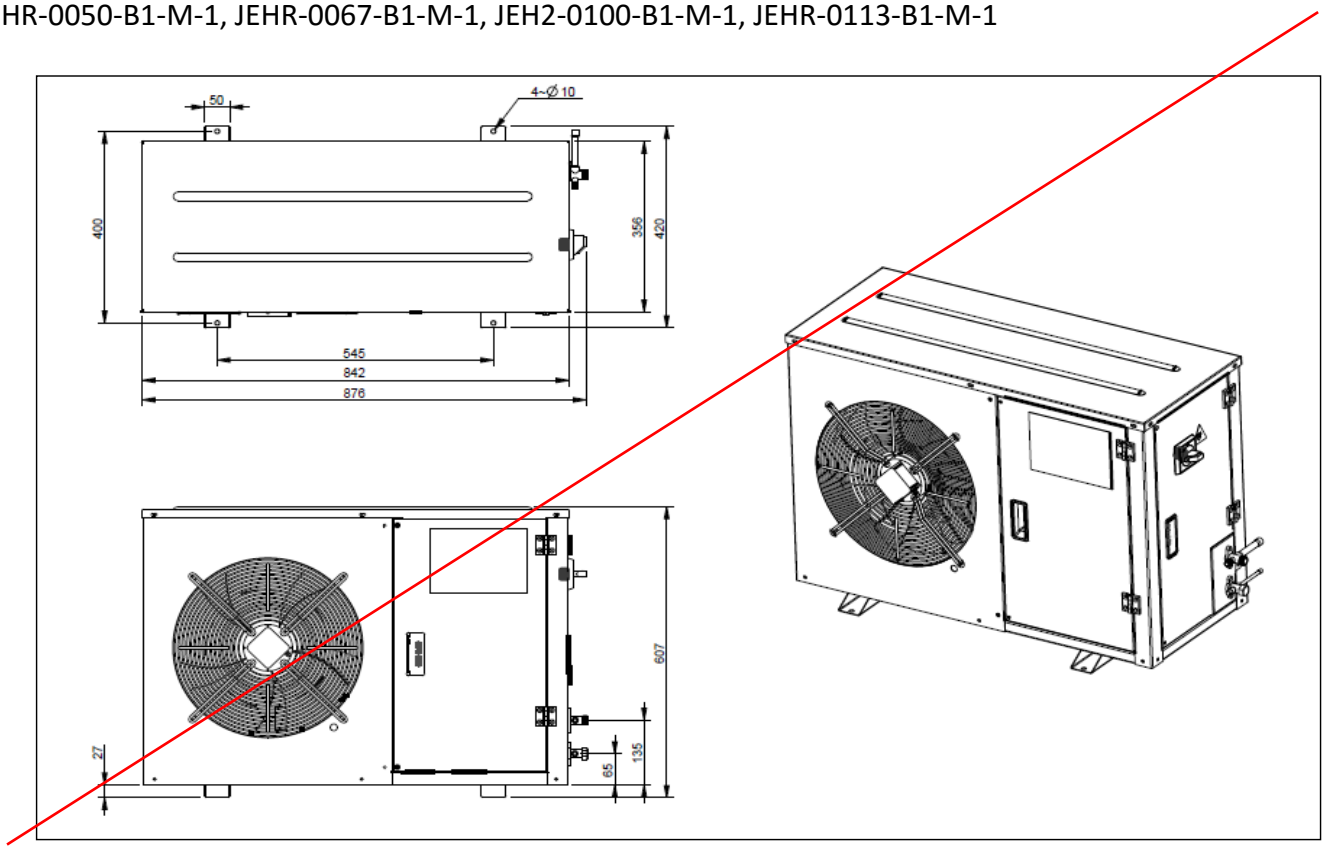

JEHR-0140-B2-M-1/3, JEHR-0150-B2-M-1/3, JEHS-0200-M-1/3, JEHS-0250-B2-M-1/3, JEHS-0300-B2-M-1/3, JEHS-0350-B2-M-1/3, JEHR-0175-L-1/3, JEHR-0225-L-1/3, JEHS-0200-B2-L-3, JEHS-0300-B2-L-3

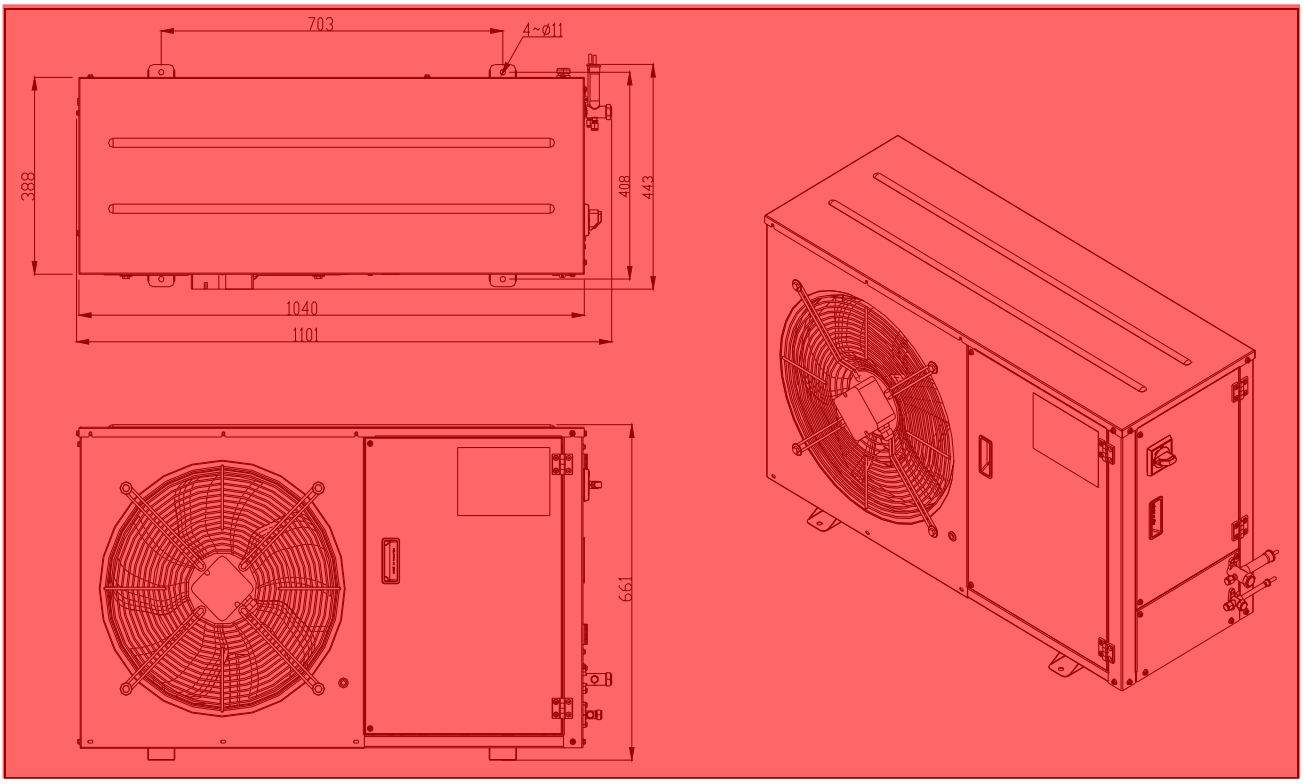

Dimensional Drawings

JEHS-0350-B3-M-1/3, JEHS-0400-B3-M-1/3, JEHS-0500-B3-M-3, JEHS-0600-B3-M-3, JEHS-0680-B3-M-3
JEHS-0400-B3-L-3, JEHS-0500-B3-L-3, JEHS-0600-B3-L-3

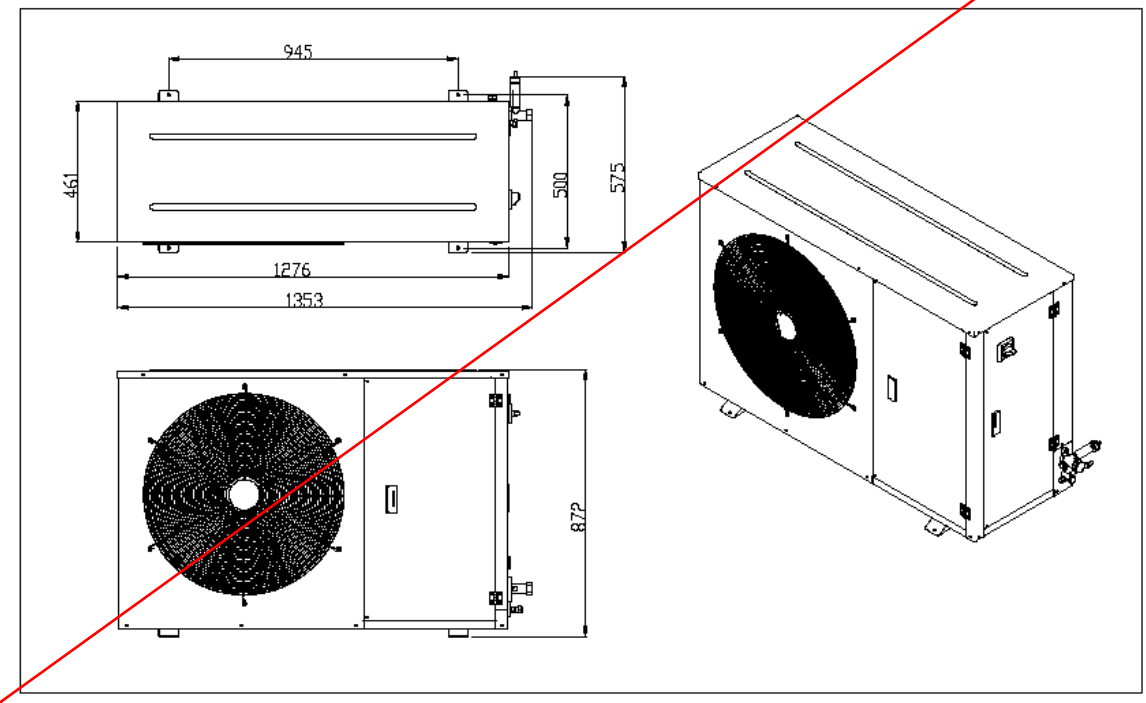

JEHS-0800-B4-M-3, JEHS-1000-B4-M-3

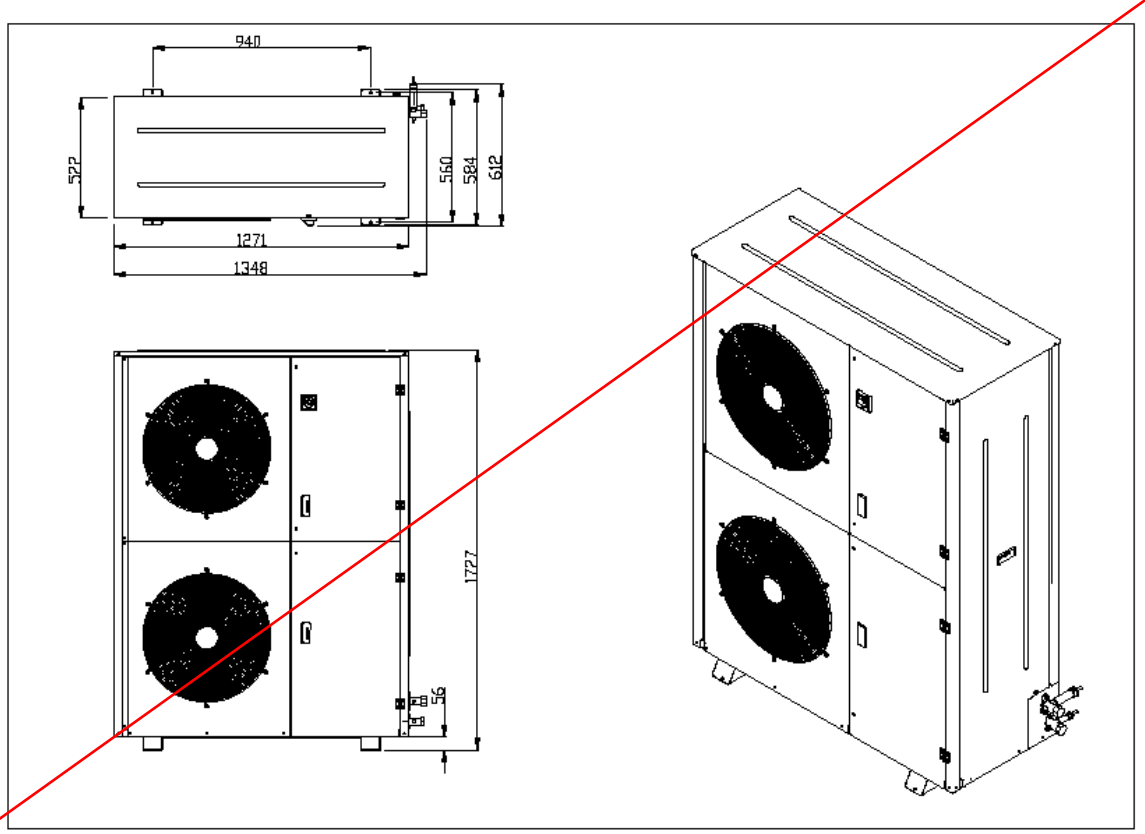

Dimensional Drawings

JEHS-0750-B4-L-3, JEHS-0950-B4-L-3 EVI

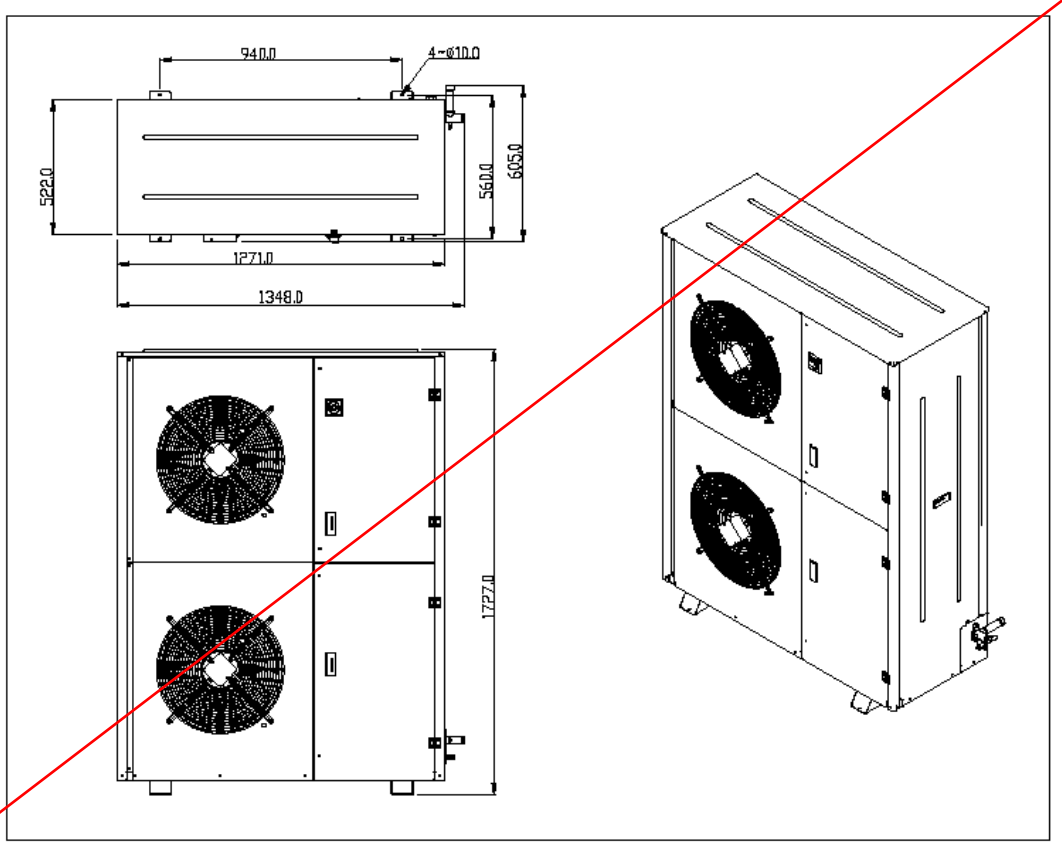

Electrical Wiring Diagrams

JEHR-0050-B1-M-1

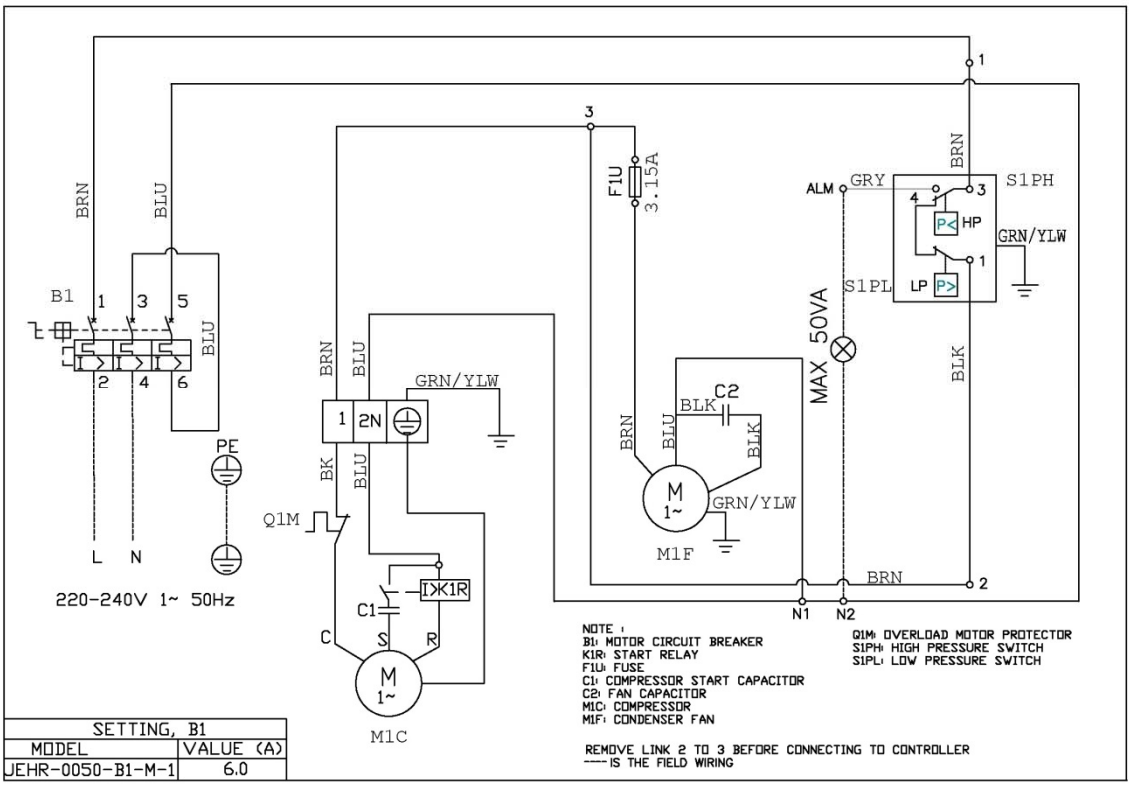

SETTING, B1	
MODEL	VALUE (A)
JEHR-0050-B1-M-1	6.0

JEHR-0067-B1-M-1, JEHR-0100-B1-M-1, JEHR-0113-B1-M-1

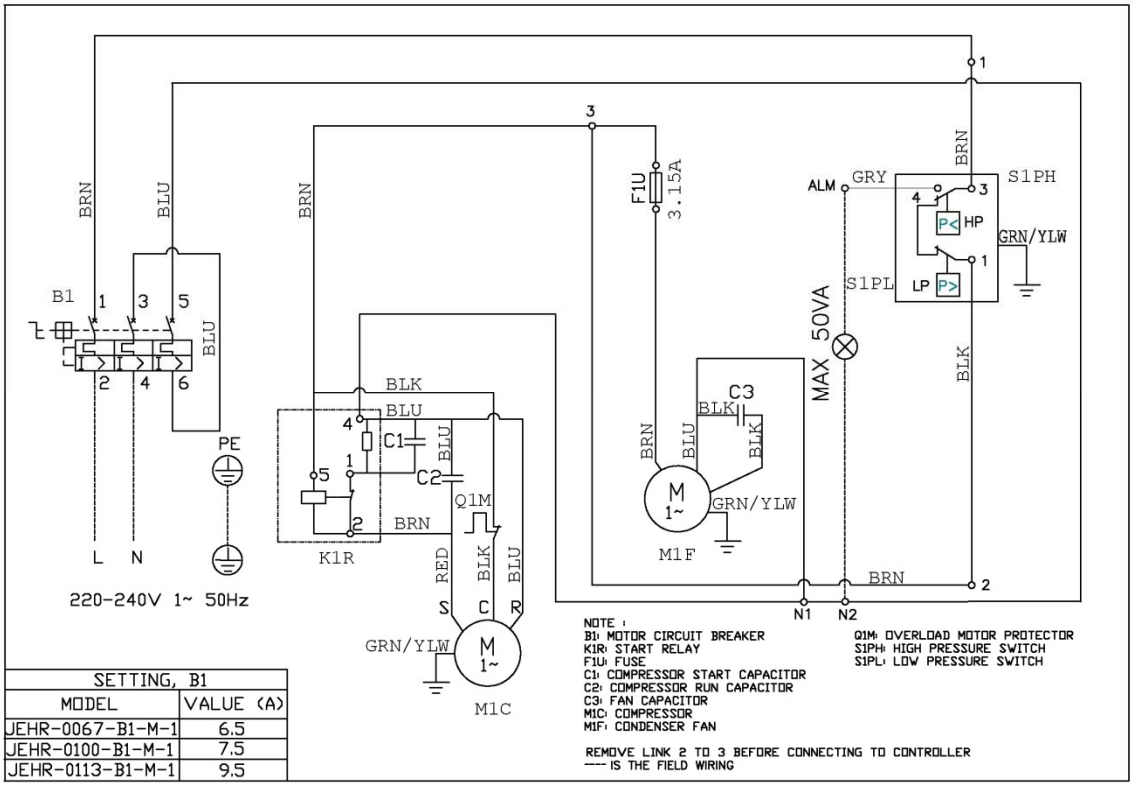

SETTING, B1	
MODEL	VALUE (A)
JEHR-0067-B1-M-1	6.5
JEHR-0100-B1-M-1	7.5
JEHR-0113-B1-M-1	9.5

Electrical Wiring Diagrams

JEHR-0140-B2-M-1

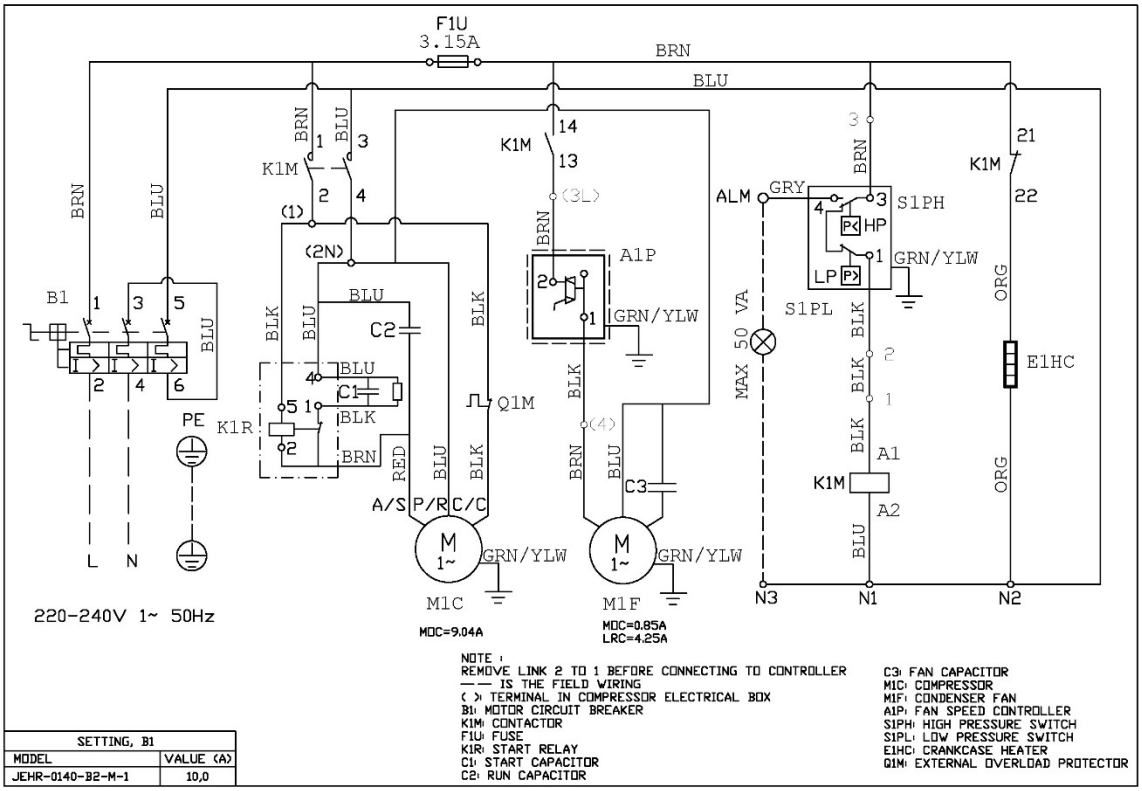

JEHR-0140-B2-M-3

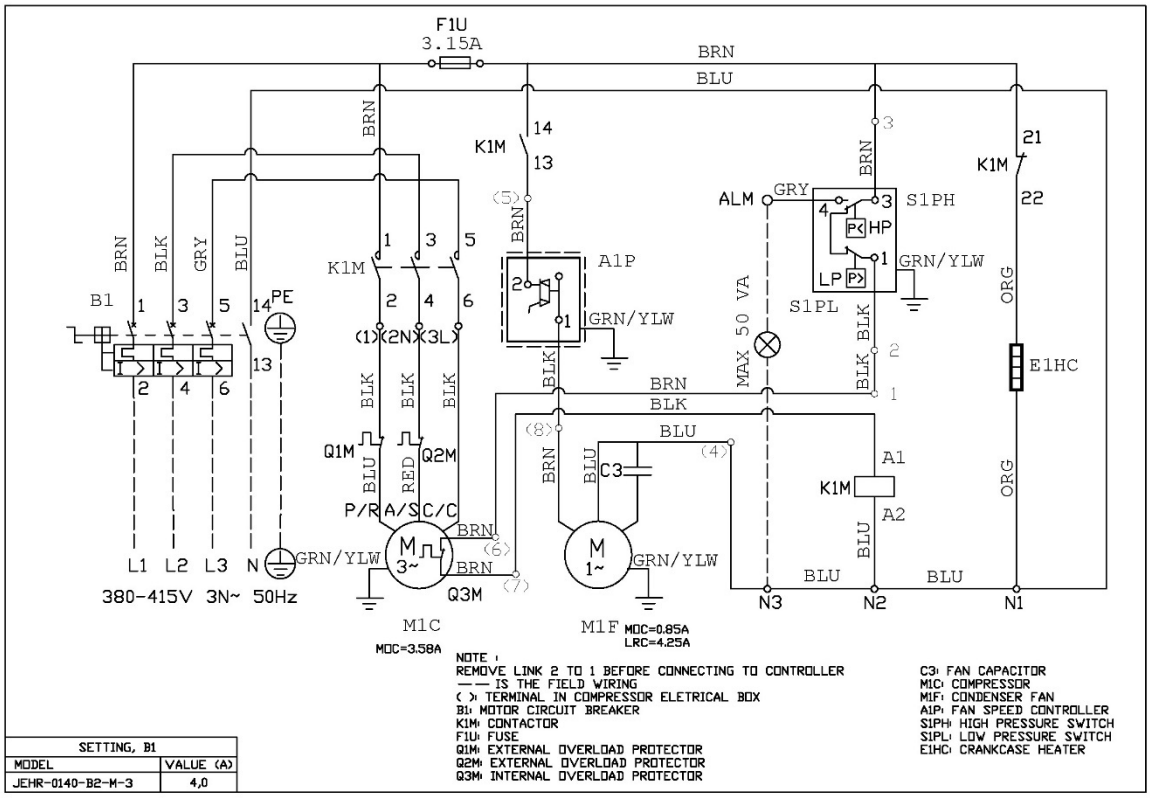

Electrical Wiring Diagrams

JEHR-0150-B2-M-1, JEHR-0175-B2-L-1, JEHR-0225-B2-L-1

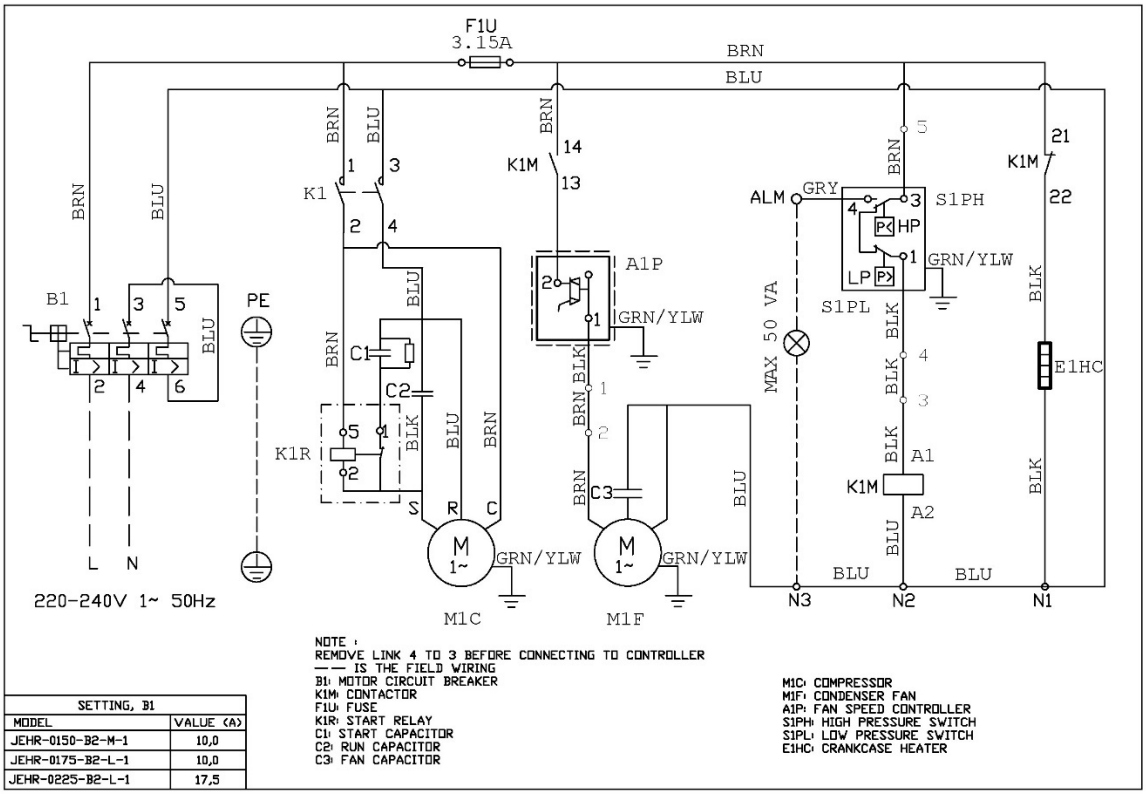

SETTING, B1	
MODEL	VALUE (A)
JEHR-0150-B2-M-1	10,0
JEHR-0175-B2-L-1	10,0
JEHR-0225-B2-L-1	17,5

JEHR-0150-B2-M-3, JEHR-0175-B2-L-3, JEHR-0225-B2-L-3

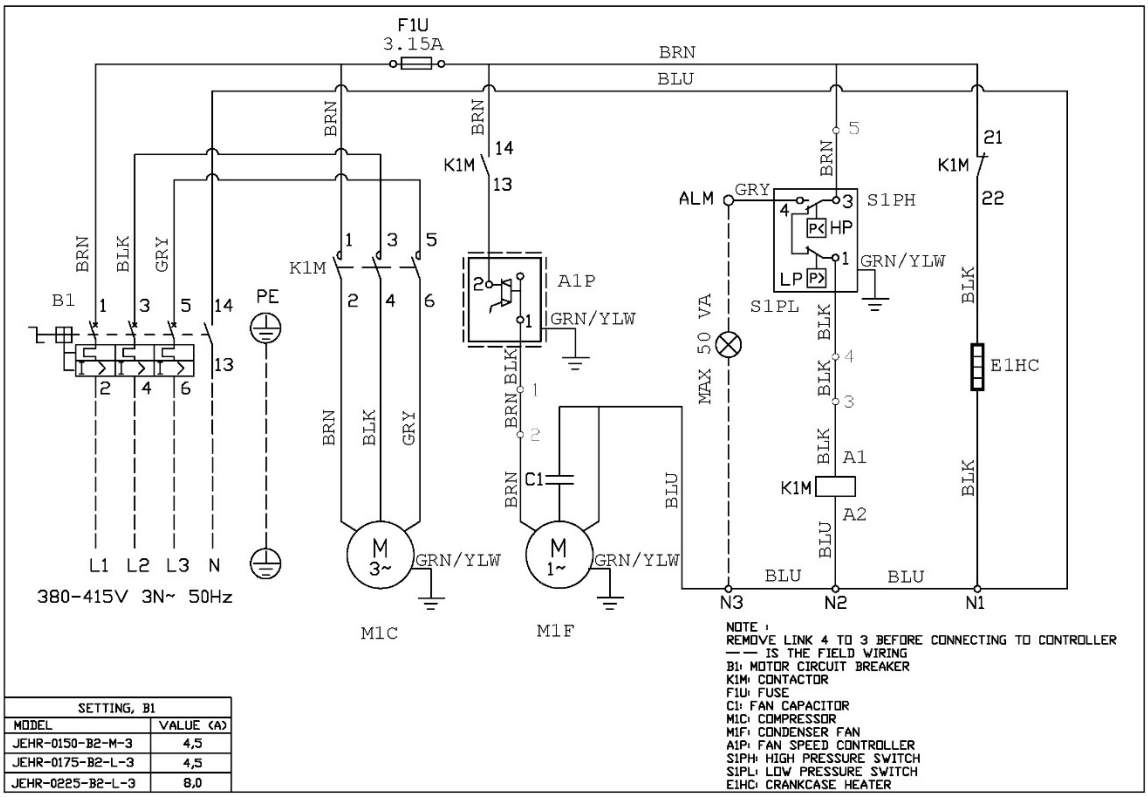

SETTING, B1	
MODEL	VALUE (A)
JEHR-0150-B2-M-3	4,5
JEHR-0175-B2-L-3	4,5
JEHR-0225-B2-L-3	8,0

Electrical Wiring Diagrams

JEHS-0200-B2-M-1, JEHS-0250-B2-M-1, JEHS-0300-B2-M-1, JEHS-0350-B2-M-1

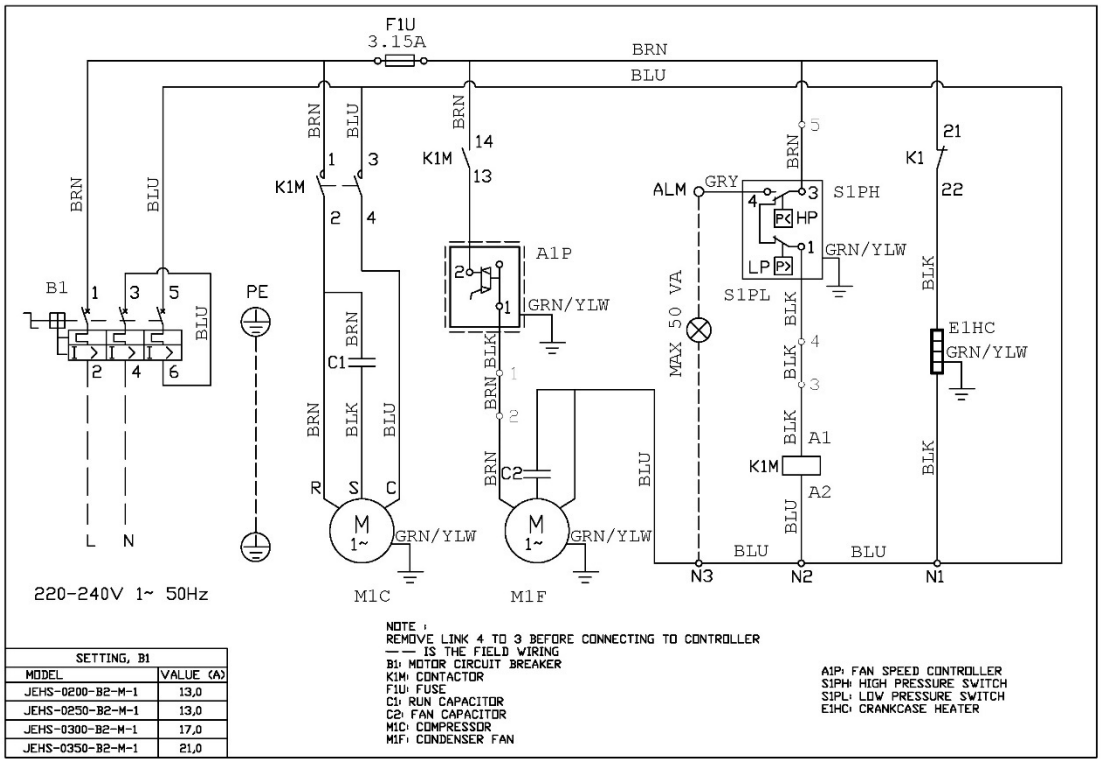

SETTING, B1	
MODEL	VALUE (A)
JEHS-0200-B2-M-1	13,0
JEHS-0250-B2-M-1	13,0
JEHS-0300-B2-M-1	17,0
JEHS-0350-B2-M-1	21,0

JEHS-0200-B2-M-3, JEHS-0250-B2-M-3, JEHS-0300-B2-M-3, JEHS-0350-B2-M-3
JEHS-0200-B2-L-3, JEHS-0300-B2-L-3

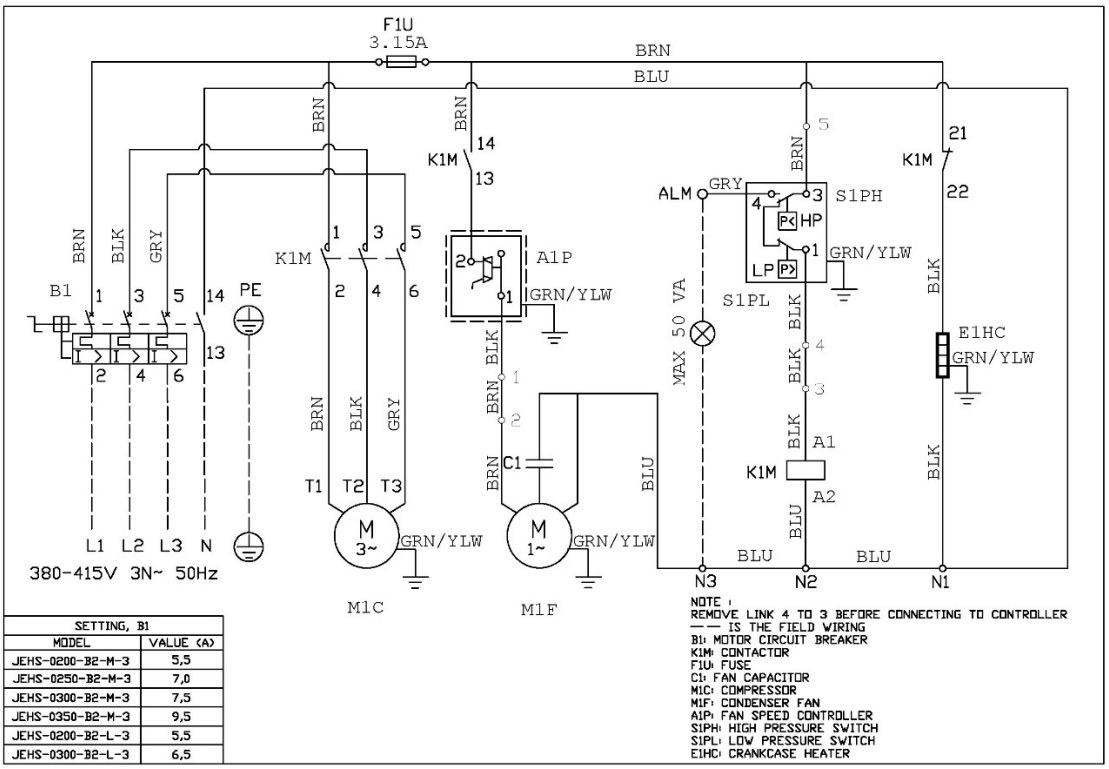

SETTING, B1	
MODEL	VALUE (A)
JEHS-0200-B2-M-3	5,5
JEHS-0250-B2-M-3	7,0
JEHS-0300-B2-M-3	7,5
JEHS-0350-B2-M-3	9,5
JEHS-0200-B2-L-3	5,5
JEHS-0300-B2-L-3	6,5

Electrical Wiring Diagrams

JEHS-0350-B3-M-1, JEHS-0400-B3-M-1

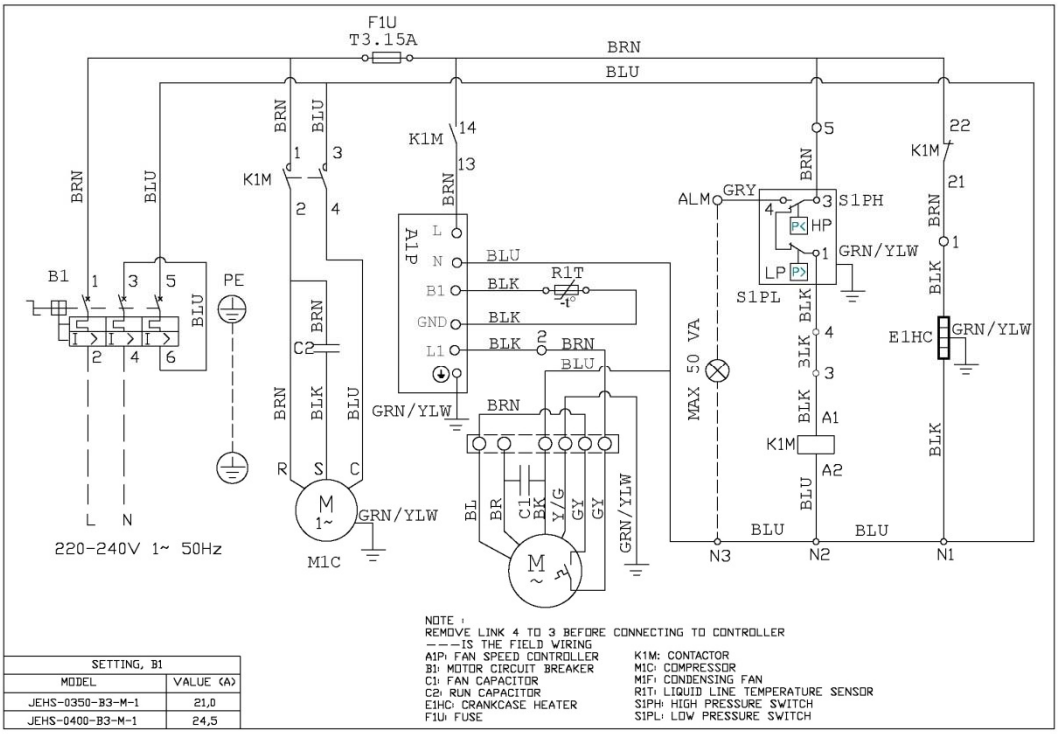

SETTING, B1	
MODEL	VALUE (A)
JEHS-0350-B3-M-1	21,0
JEHS-0400-B3-M-1	24,5

JEHS-0350-B3-M-3, JEHS-0400-B3-M-3, JEHS-0500-B3-M-3, JEHS-0600-B3-M-3, JEHS-0680-B3-M-3
JEHS-0400-B3-L-3, JEHS-0500-B3-L-3, JEHS-0600-B3-L-3

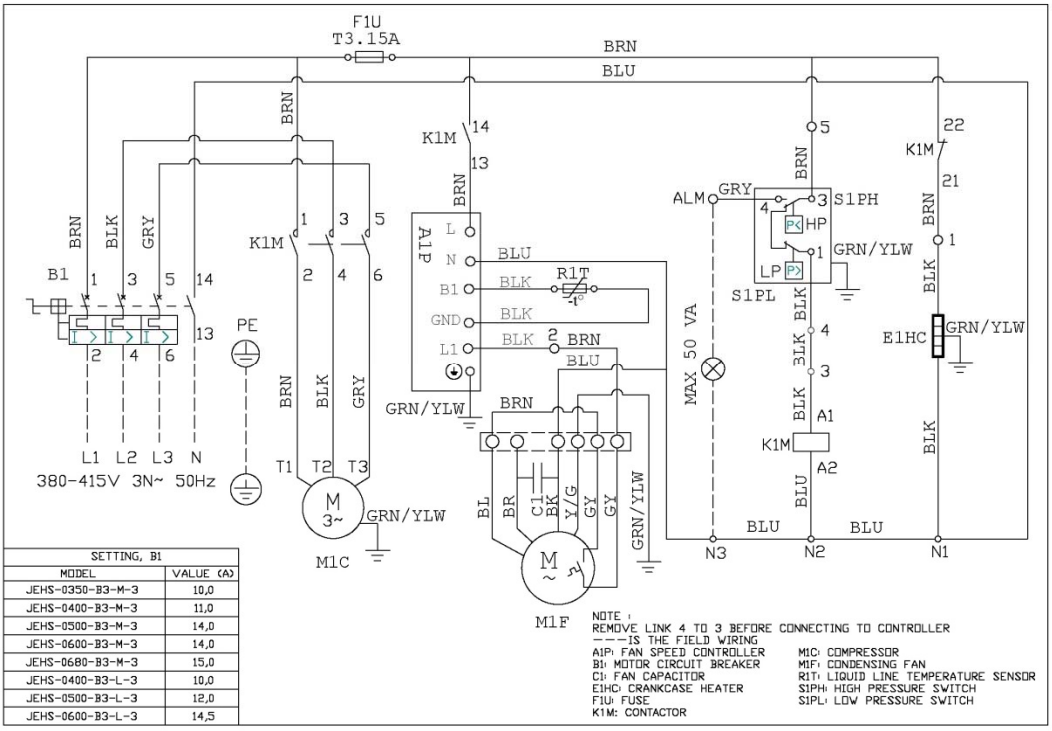

SETTING, B1	
MODEL	VALUE (A)
JEHS-0350-B3-M-3	10,0
JEHS-0400-B3-M-3	11,0
JEHS-0500-B3-M-3	14,0
JEHS-0600-B3-M-3	14,0
JEHS-0680-B3-M-3	15,0
JEHS-0400-B3-L-3	10,0
JEHS-0500-B3-L-3	12,0
JEHS-0600-B3-L-3	14,5

Electrical Wiring Diagrams

JEHS-0800-B4-M-3, JEHS-1000-B4-M-3

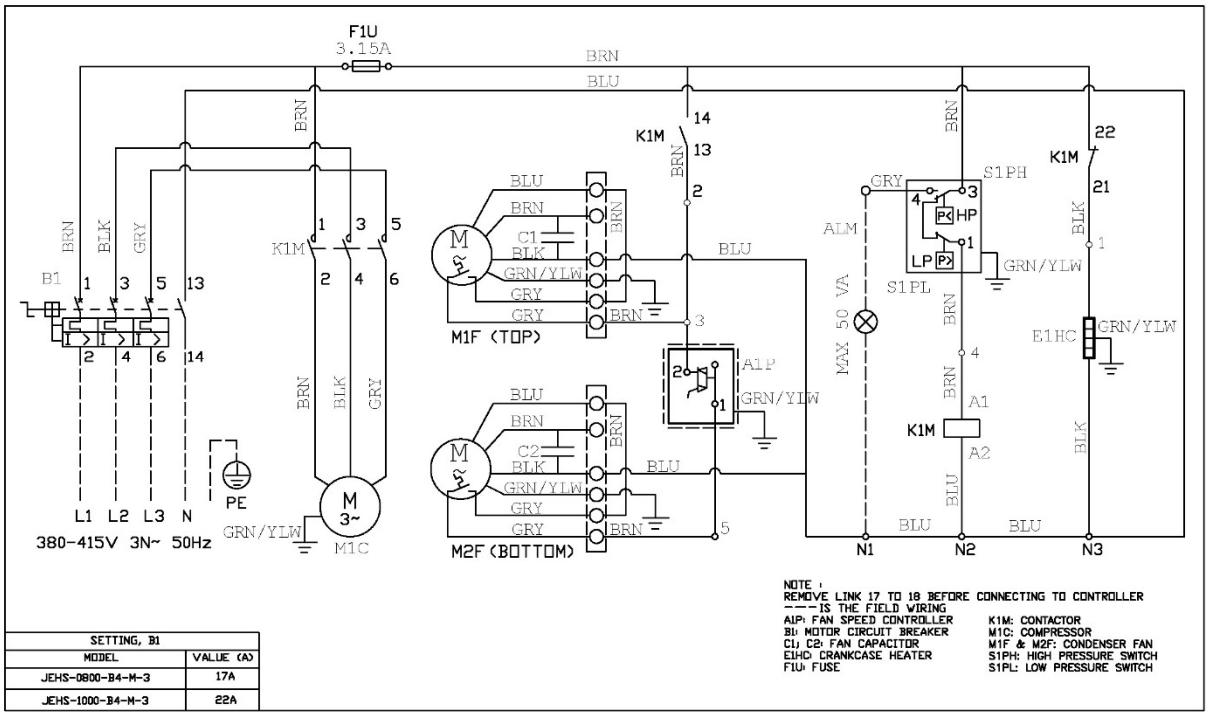

JEHS-0750-B4-L-3

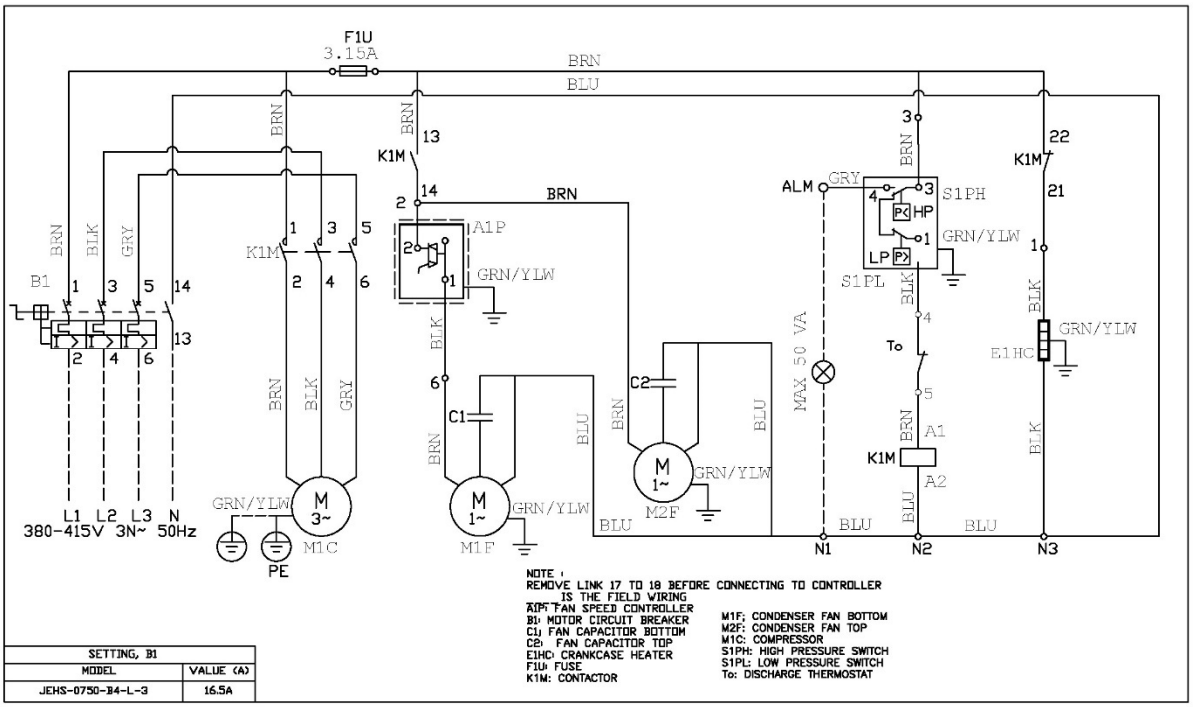

Electrical Wiring Diagrams

JEHS-0950-B4-L-3

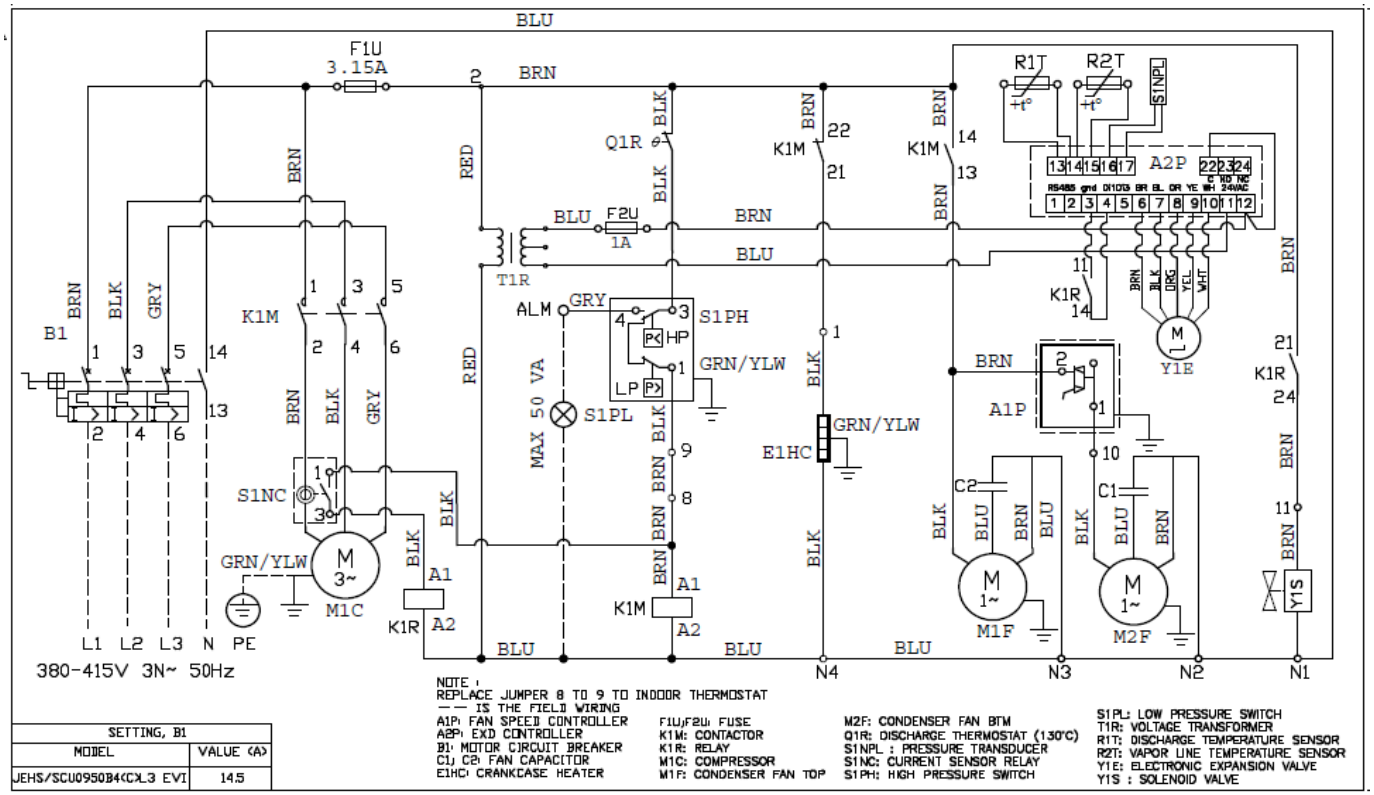

SETTING, B1	
MODEL	VALUE (A)
JEHS/SCU0950B4(C)L3 EVI	14.5

Service & Maintenance

Important Note:

Warning! – Disconnect the mains electrical supply before servicing or opening the unit.

The condensing units are designed to give long life operation with minimum maintenance. However, they should be routinely checked and the following service schedule is recommended under normal circumstances:
The removal of the top, side and front panels ensures that all parts are accessible.

1. Compressor – Inspect at regular intervals

- Check for refrigerant leaks on all joints and fittings.
- Check mountings for tightness and wear.
- Check operation of crankcase heater.
- Check electrical connections.
- Ensure that no abnormal noise or vibration is detected during test run.
- Check the compressor oil levels and top up if required. The oil level should be ½ to ¾ way up the sight glass (where fitted).

2. Condenser Fan Motor & Blade – Clean and inspect at regular intervals

- Check for abnormal noise, vibration and fan imbalance.
- Ensure that the fan motor is clean and spins freely.
- Check that the condenser fan blade is clean and free from restriction and damage/imbalance.
- **Note:** The fan motor is pre-lubricated and factory sealed so no maintenance is necessary.

3. Microchannel Condenser Coil – Clean and inspect at regular intervals.

- Remove surface dirt, leaves etc. with a vacuum cleaner (preferably with a brush or other soft attachment rather than a metal tube), compressed air blown from the inside out, and/or a soft bristle (not wire!) brush. Do not impact or scrape the coil with the vacuum tube, air nozzle, etc.
- Do not use any chemicals (including those advertised as coil cleaners) to wash micro channel heat exchangers. They can cause corrosion. **Rinse only.** Hose the MCHE off gently, preferably from the inside out and top to bottom, running the water thru every fin passage until it comes out clean. Micro channels fins are stronger than traditional tube & fin coil fins but still need to be handled with care. Do not bang the hose into the coil. We recommend putting your thumb over the end of the hose rather than using a nozzle end because the resulting spray is gentler and the possibility for impact damage is less.
- Micro channel heat exchangers, because of their fin geometry, tend to retain water more than traditional fin & tube coils. Depending on the specific design and installation of your coil, it may be beneficial to blow or vacuum out the rinse water from your unit to speed drying and prevent pooling.

4. Compact Brazed Heat Exchanger (BPHE)

- Any soldering process done on the heat exchanger needs to be brazed with minimum 45% silver solder at maximum 450°C (840°F) when soft soldering and 450-800°C (840-1470°F) when hard soldering.
- Do not direct flame at BPHE and use wet rag to avoid overheating of BPHE.

5. Rotolock Torque

- Before unit commisioning and at every subsequent maintenance visit the compressor rotolock valve connections must be checked for tightness based on table shown in page 12.

6. Controls

- Check settings and operation of pressure switches.
- Check overload setting.
- Check fan speed control setting and operation.

7. Power Supply – Inspect at regular intervals.

- Check the running current and voltage for the condensing unit.
- Check the electrical wiring and tighten the wires onto the terminal blocks if necessary.

8. Refrigerant Charge

- Check the refrigerant charge by ensuring that the system is operating correctly, the pressures are as expected and that the liquid line sight glass shows a full bore of liquid refrigerant.
- Carry out a full leak test.

9. Unit decommissioning and disposal

- At the end of the unit's useful life, a suitably qualified engineer should decommission it. The refrigerant and compressor oil are classed as hazardous waste and as such must be reclaimed and disposed of in the correct manner, including completion of waste transfer paperwork. The unit components must be disposed of or recycled as appropriate in the correct manner.

F-Gas Information

From 1/1/2015, F-Gas Regulation EU 517/2014 came into force replacing the old Regulation EC 842/2006. This affects system labelling, information supplied within documentation and also the way in which thresholds for frequency of leak testing refrigeration systems are calculated. Please be aware of the following:

- The models of equipment covered in this Technical Manual rely on fluorinated greenhouse gases for their functioning.
- All unit models come from the factory pressurized with OFN (Oxygen Free Nitrogen) only.
- The GWP (Global Warming Potential) values of refrigerants which are specified for use along with the three new thresholds for leak testing requirements based on TCO_2Eq (Tonnes CO_2 Equivalent) are as follows:

		Refrigerant Charge - kg		
		5T	50T	500T
Refrigerant	GWP	CO_2Eq	CO_2Eq	CO_2Eq
R134a	1430	3.5	35.0	350
R404A	3922	1.3	12.7	127
R407A	2107	2.4	23.7	237
R407F	1825	2.7	27.4	274
R448A	1387	3.6	36.0	360
R449A	1397	3.6	35.8	358

- Changes to leak testing requirements are as follows:

OLD LEGISLATION	NEW LEGISLATION	LEAK CHECKING FREQUENCY
3-30 kgs	5-50 TCO_2Eq	Every 12 months but can be increased to 24 months if fitted with a fixed leak detection system.
30-300 kgs	50-500 TCO_2Eq	Every 6 months but can be increased to 12 months if fitted with a fixed leak detection system.
300+ kgs	500+ TCO_2Eq	Every 6 months - however automatic leak detection system is mandatory which requires servicing every 12 months

To calculate TCO_2Eq value: $\frac{\text{Refrigerant charge (kgs) x Refrigerant GWP}}{1000}$

Please note: From 1st January 2017, the new legislation applies to systems which previously were exempt from leak testing under the 'below 3kg' charge limit.

A refrigerant charge label is supplied with each unit (inside the electrical box) manufactured from January 2015. The total refrigerant charge for the system and the TCO_2Eq value must be entered on the label with indelible ink and must be adhered in the proximity of the product charging port. The label supplied will represent the refrigerants approved for use with that particular unit. An example of the unit labels is as follows:

Contains fluorinated greenhouse gases

Ref.	GWP	Charge (kg)	TCO_2 Eq.
R404A	3922		
R407A	2107		
R407F	1825		
R448A	1387		
R449A	1397		
R134a	1430		

Danfoss SAGInoMIYA

Read all instructions thoroughly **ENGLISH**

Installation Instructions: XGE Fan Speed Controller

IMPORTANT

Failure to read and follow all instructions carefully before installing or operating this Fan Speed Controller could cause personal injury and/or property damage. Save these instructions for future use.

NOTES FOR SAFETY

⚠ WARNING

- **Before wiring and service, be sure to turn off power supply. Otherwise, may cause electrical shock.**
- **Before connection of a plug and disassembly of a plug, be sure to turn off power supply as it may cause electrical shock.**
- **Do not touch the main body during driving. Otherwise, it may burn a hands.**

OUTLINE

The XGE controls Fan Motor Speed of air cooled condenser of general purpose cold/ cooling unit by phase control, and keeps a definite condensing pressure and makes it to drive stably. Further, the XGE has a noise filter, and is suitable to the following Council Directive of European Communities.

ELECTROMAGNETIC COMPATIBILITY & SAFETY FOR ELECTRICAL EQUIPMENT

As for the XGE, Saginomiya declared for the above directives as follows.

1) Electromagnetic Compatibility
   – Directives: 89/336/EEC, 92/31/EEC, 93/68/EEC
2) Safety for Electrical Equipment
   – Directives: 73/23/EEC, 93/68/EEC

MOUNTING

Directly mount onto the pressure line (see Fig.1a) in a location where pressure can be detected accurately (eg. After the condenser) Alternatively it is possible to remote mount to a side panel using the optional fixing bracket (see fig. 8) and connect to the pressure line with a refrigeration pipe (not supplied).

⚠ CAUTION

- Don' t install at the place to require degrees of protection over IP65 Category 2 enclosures.
- Don' t tighten with excessive force whilst holding the unit, since this can result in deformation of the controller. For direct mounting, tighten the connection using an appropriately sized spanner and with a torque of 12.7 ~ 15Nm (see Fig.2).
- The mounting position should be in the vertical axis and should not be fitted more than 45 ° from the vertical (See Fig.1b).
- Failure to install the Copper Packing at the connection portion cause leak of refrigerant gas.
- Provide adequate ventilation space so that heat doesn' t build up. At least 50mm clearance above the top and below the bottom of XGE is necessary. Don' t mount this instrument directly above equipment that generates large amount of heat.
  (heaters, transformers, large-wattage resistors.)

WIRING

Please refer to the diagram embossed on the controller (see Fig.4) for use of correct terminals on the plug (supplied). Connect Ground terminal to the earth line. Please also make sure not to exceed the electrical rating of the XGE when connecting to the fan motor. It is possible to connect fan motors in parallel as long as the rating is not exceeded. The plug can wired so that orientation is possible in 4 directions as desired.
(see Fig. 6)

⚠ CAUTION

- For connecting fan motor, use one phase 200 to 240V. AC, one-phase Induction motor which suited for phase control and with heat preventing thermostat, or shaded pole motor.
- There is a case that the XGE does not control the fan speed of the motor having large angle of its leading current.
- When connect with the power, make sure to use a Circuit Breaker or a Fuse with the rated ampere or less of each XGE model as shown by the cover.
- Fix the plug onto the XGE, using the gasket provided and securely tigthen with the screw (also provided) using a torque of 0.4 – 0.6 Nm (see Fig. 5). CAUTION: It is important to use the gasket (DIN 43650) between the plug and controller as well as tigthening the screw sufficiently to avoid the risk of electrical shock or short circuit.
- When using a forced operation switch or fuse, make sure to connect across terminals No.1 and No.2.
  When a fan with selectable speed is being used, please first check that the fan functions correctly after connecting to the XGE, and before running in normal operating mode.
- When using a 4A fan motor, the ambient temperature should not exceed 40°C[104° F]. Please refer to Fig 10 for the details of "the relationship between electric current and ambient temperature.

ADJUSTING (Fig.3)

Turn the Range Adjusting Screw to clockwise (+) for Increasing the setting value, and to counterclockwise (-) for decreasing the setting value.
(Please use the right chart as reference for adjusting.)

Catalog No.	1 Turn
XGE-4*	Approx. 1.5bar
XGE-6*	Approx. 2.5bar

⚠ CAUTION

- Do not move the screw other than the Range Adjusting Screw.

OPERATION CHECK

Install and calibrate the product correctly and then check its operation to confirm correct function of the whole system.

⚠ CAUTION

- It can not be used for ammonia refrigeration system.
- This product is not available for the system which apply pressure more than 47bar[681Psi] because the rated maximum working pressure of this product is 47bar [681Psi] if the pressure more than the rated maximum working pressure is applied to this product, it causes transformation of characteristics or the destruction.
  Operation will become unstable when using other than sine waves for the power supply. In this case, proper control may not be achieved.
- To ensure stable operation, sine wave AC power supply must also be stable.

LIMIT ON APPLICATION

The product is not designed and manufactured for such equipment or system that is intended to be used under such circumstances as to relate to human life.
For application requiring specially high reliability, please contact the Company first.

SCOPE OF WARRANTY

Unless otherwise agreed by the parties, warranty period of the Product shall be one year after delivery.
In case of failure attributable to the Company within such period, the Product shall be repaired or replaced, provided that any one of followings are out of the warranty.:

1. Improper handling or application by user.
2. Modification or repair by other than the Company.
3. Any failure to be caused by acts of God, fire, storm or the like, war, riot or the like and other causes beyond the control of the parties concerned.

Warranty described in this paragraph means the warranty for the Product itself and does not include warranty for any consequential damage arising out of or occasioned by a defect or failure of the Product.

SPECIFICATIONS

Catalog number	F.V.S.Setting bar[Psi] Factory Set	Adjusting Range Min.	Adjusting Range Max.	E.P.B. bar [Psi]	Refrigerants	Electrical Rating	Pressure admission Port	Weight g	Fanction 1	Fanction 2
XGE-4C	19	10	25	Fixed 6	R22, R404A, R407C	Single phase 200 to 240V~ 50/60Hz 0.2 to 4A (0.2 to 3A)	7/16-20UNF Female flare with Schrader	190	Cut off	Fixed approx. 45% at 50Hz Fixed approx. 35% at 60Hz
XGE-4M	[276]	[145]	[363]	[87]					Min. speed	
XGE-6C	25	22	39	Fixed 7	R410A				Cut off	
XGE-6M	[363]	[320]	[566]	[102]					Min. speed	

Ambient Temperature of Fan Speed Controller Housing : -20 to 55°C[-4 to 131° F](With 4A rated fans : 40°C[104° F] maximum ambient temperature.) Vibration : 2G or less in normal use./Shock : 100G or less.
Special specification: F.V.S.Factory setting can be set the different points within the Adjusting Range on demand.
These model were approved CSA with c-US. (Master Contract:170124)
- Applicable requirements CAN/CSA-22.2 No.1010.1-92 and UL std. No.UL61010C-1-1st Ed.

F.V.S. : Full Voltage Set point
The pressure at which the control delivers 95% out put effective voltage. (R.M.S.(V%))
E.P.B. : Effective Proportional Band
The decrease in pressure below the calibration set point required to transmit a 45% of effective voltage. (R.M.S.(V%))

Technical Information

Dual Pressure Switch

Safety pressure switch settings

The pressure switches fitted to condensing units with auto reset for low pressure and manual reset for high pressure are **NOT** factory preset.

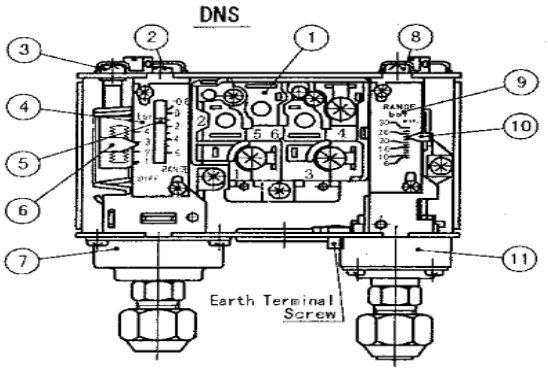

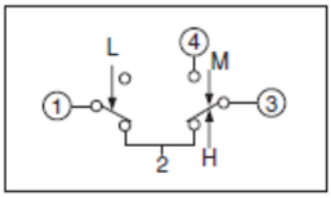

1. Micro Switch
2. Range Adjusting Screw
3. Differential Adjusting Screw
4. Low Pressure Scale plate
5. Low Pressure Range pointer
6. Differential pointer
7. Low Pressure Bellows cover
8. High Pressure range Adjusting Screw
9. High Pressure Scale plate
10. High Pressure Range pointer
11. High Pressure Bellow cover

Setting procedure for DNS Pressure switch

High Pressure side:

Turning the adjusting screw (8) clockwise will increase the cut-out pressure setting. Turning the adjusting screw anti-clockwise will decrease the cut-out pressure setting. The differential setting is fixed so the cut-in will vary with the cut-out setting. Lock the spindle with locking plate after setting.

Low pressure side:

Range: Turning the range adjusting screw (2) clockwise will decrease the cut-in pressure setting. Turning the range adjusting screw anti-clockwise will increase the cut-in pressure setting.

Differential: Turning the differential adjusting screw (3) clockwise will increase the differential pressure setting. Turning the differential adjusting screw anti-clockwise will decrease the differential pressure setting.
Lock the spindle with locking plate after setting.

Certification

DOC/002-15(2)

Declaration of Conformity
Konformitätsbescheinigung
Déclaration de Conformité
Conformiteitsverklaring
Declaracion de Conformidad
Dichiarazione di Conformità
Overensstemmelseserklæring
Declaração de Conformidade
Δήλωση Συμμόρφωσης
Deklaracja zgodności

DAIKIN REFRIGERATION MALAYSIA SDN. BHD.
LOT 10, JALAN PERUSAHAAN 8, KAWASAN PERUSAHAAN PEKAN BANTING, 42700 BANTING, SELANGOR DARUL EHSAN, MALAYSIA.

declare under our sole responsibility that the products
bescheinigen auf unsere eigene Verantwortung, daß die Produkten
déclarons sous notre seule responsabilité que les produits
verklaren onder onze uitsluitende verantwoordelijkheid de producten
declaramos sobre nuestra sola responsabilidad que los productos
dichiariamo sotto nostra sola responsabilità che i prodotti
erklærer som eneansvarlige, at produktet
declaramos sob a nossa responsabilidade exclusiva que os produtos
δηλώνει υπό την αποκλειστική της ευθύνη ότι τα προϊόντα
oświadcza z pełną odpowiedzialnością, że produkty

COMMERCIAL REFRIGERATION CONDENSING UNIT
Unided que condensa comercial de la refrigeración
Unité de condensation commerciale de réfrigération
Commerciële condenserende koel-unit
Kommerzielle kondensierende Maeinheit der Abkühlung
Unità condensate commerciale di refrigerazione
kølekondenseringsenheden til kommercielt brug
Unidade de condensação de refrigeração
Εμπορικη Μοναδα Συμπυκνωσης Ψυξης
AGREGAT SKRAPLAJĄCY - CHŁODNICTWO KOMERCYJNE

Model Designations:	See Appendix 1 overleaf
Baumuster-Bezeichnungen:	*Sehen sie anhang l umseitig*
Désignations Modéles:	*Voir l'annexe l au verso*
Aanduidingen Model:	*Zie ommezijde voor bijlage 1*
Disgnaciones Modelo:	*Vea el apendice l a la vuelta*
ndicazionu de Modello:	*Veda overleaf l'appendice l*
modelbetegnelse:	*se appendiks 1 på bagsiden*
Designações do modelo:	*Ver Apêndice I verso*
Ονομασίες μοντέλου:	*Βλ. Παράρτημα 1 στο πίσω μέρος της σελίδας*
Oznaczenia modelu:	*Patrz na odwrocie Załącznik 1*

which this declaration relates is in conformity with the requirements of the following directives
auf diese Bescheinigung sich beziehen, sind den Vorschriften der Normen entsprechend
auxquels se réfèrent cette déclaration, sont conformes aux prescriptions des directives
waarop deze verklaring betrekking heeft, in overeenstemming is/zijn met de eisen van de volgende richtlijnen
a los cuales se reieren està declaracion, son conformes a las prescripciones de las directivas
alla quale si riferisce questa dichiarazione, sono conormi alle prescrizioni delle directtive
som denne erklæring vedrører, er i overensstemmelse med kravene fremsat i følgende direktiver
que esta declaração está conforme os requerimentos das seguintes directrizes
τα οποία αφορά αυτή η δήλωση συμμορφώνονται με τις απαιτήσεις των παρακάτω οδηγιών
których dotyczy ta deklaracja są zgodne z wymaganiami następujących Dyrektyw

Machinery Directive *	**2006/42/EC**
IEC/ EN 60335-1	Safety of Household and Similar Electrical Appliances: Part I
IEC/ EN 60335-2-89	Safety of Household and Similar Electrical Appliances: Part II
Eco-design Directive	**2009/125/EC**
Commission regulation (EU) 2015/1095	Ecodesign requirements for condensing units

* J&E Hall International is authorised to compile the Technical Construction File.
* J&E Hall International hat die Berechtigung die Technische Konstruktionsakte zusammenzustellen.
* J&E Hall International est autorisé à compiler le Dossier de Construction Technique.
* J&E Hall International is gevolmachtigd het Technisch Constructiedossier op te stellen.
* J&E Hall International está autorizado a compilar el Archivo de Construcción Técnica.
* J&E Hall International è autorizzata a redigere il File Tecnico di Costruzione.
* J&E Hall International er bemyndiget til at kompilere teknikkonstruktionsfilen.
* J&E Hall International tem autorização para compilar o Ficheiro de Construção Técnica.
* J&E Hall International είναι εξουσιοδοτημένη να καταρτίσει τον Τεχνικό Φάκελο Κατασκευής.
* J&E Hall International jest upoważniony do opracowania dokumentacji technicznej.

J & E Hall Limited, Hansard Gate, West Meadows, Derby, DE21 6JN, United Kingdom.

General Manager

Teh Yeow Chong
Issue Date: 09 May 2017

Certification

DOC/002-15(2)

Declaration of Conformity
Konformitätsbescheinigung
Déclaration de Conformité
Conformiteitsverklaring
Declaracion de Conformidad
Dichiarazione di Conformità
Overensstemmelseserklæring
Declaração de Conformidade
Δήλωση Συμμόρφωσης
Deklaracja zgodności

DAIKIN REFRIGERATION MALAYSIA SDN. BHD.
LOT 10, JALAN PERUSAHAAN 8, KAWASAN PERUSAHAAN PEKAN BANTING, 42700 BANTING, SELANGOR DARUL EHSAN, MALAYSIA.

Model Designations:
Baumuster-Bezeichnungen:
Designation Modeles:
Aanduidingen Model:
Disignaciones Modelo:
Indicazionu de Modello:
modelbetegnelse:
Designações do modelo:
Ονομασίες μοντέλου:
Oznaczenia modelu:

JEHR-0050-B1-M-1	JEHR-0150-B2-M-3	JEHS-0350-B2-M-1
JEHR-0067-B1-M-1	JEHR-0225-B2-M-1	JEHS-0350-B2-M-3
JEHR-0100-B1-M-1	JEHR-0225-B2-M-3	JEHS-0350-B3-M-1
JEHR-0113-B1-M-1	JEHR-0300-B2-M-1	JEHS-0350-B3-M-3
JEHR-0040-B1-M-1	JEHR-0300-B2-M-3	JEHS-0400-B3-M-1
JEHR-0051-B1-M-1	JEHS-0200-B2-M-1	JEHS-0400-B3-M-3
JEHR-0063-B1-M-1	JEHS-0200-B2-M-3	JEHS-0500-B3-M-3
JEHR-0077-B1-M-1	JEHS-0250-B2-M-1	JEHS-0600-B3-M-3
JEHR-0095-B1-M-1	JEHS-0250-B2-M-3	JEHS-0680-B3-M-3
JEHR-0140-B2-M-1	JEHS-0300-B2-M-1	JEHS-0800-B4-M-3
JEHR-0140-B2-M-3	JEHS-0300-B2-M-3	JEHS-1000-B4-M-3
JEHR-0150-B2-M-1		

JEHR-0175-B2-L-1	JEHR-0175-B2-L-3	JEHR-0225-B2-L-1
JEHR-0225-B2-L-3	JEHS-0200-B2-L-3	JEHS-0300-B2-L-3
JEHS-0400-B3-L-3	JEHS-0500-B3-L-3	JEHS-0600-B3-L-3
JEHS-0750-B4-L-3	JEHS-0950-B4-L-3 EVI	

JEHSD-0400-B3-M-3	JEHSD-0600-B3-M-3	JEHSD-0800-B4-M-3

J&E Hall International

Certification

DAIKIN REFRIGERATION MALAYSIA SDN. BHD. (34543-W)
Lot 10, Jalan Perusahaan 8, Kawasan Perusahaan Pekan Banting, 42700 Banting, Selangor Darul Ehsan, Malaysia.
Tel: +603-31872911 Fax: +603-31878597

PED Statement for Product

Refrigeration Condensing Unit

Model Designations :

JEHR-0050-B1-M-1	JEHR-0095-B1-M-1	JEHR-0300-B2-M-3	JEHS-0350-B2-M-3
JEHR-0067-B1-M-1	JEHR-0140-B2-M-1	JEHS-0200-B2-M-1	JEHR-0175-B2-L-1
JEHR-0100-B1-M-1	JEHR-0140-B2-M-3	JEHS-0200-B2-M-3	JEHR-0175-B2-L-3
JEHR-0113-B1-M-1	JEHR-0150-B2-M-1	JEHS-0250-B2-M-1	JEHR-0225-B2-L-1
JEHR-0040-B1-M-1	JEHR-0150-B2-M-3	JEHS-0250-B2-M-3	JEHR-0225-B2-L-3
JEHR-0051-B1-M-1	JEHR-0225-B2-M-1	JEHS-0300-B2-M-1	JEHS-0200-B2-L-3
JEHR-0063-B1-M-1	JEHR-0225-B2-M-3	JEHS-0300-B2-M-3	JEHS-0300-B2-L-3
JEHR-0077-B1-M-1	JEHR-0300-B2-M-1	JEHS-0350-B2-M-1	

Which are containing refrigerating fluids classified in Group 2 and classified in category I according to **PRESSURE EQUIPMENT DIRECTIVE 2014/68/EU.**

The products are provided with a CE marking of conformity as they fulfill the following requirements:

Technical standards and specification:

are in conformity with the **Machinery Directive 2006/42/EC** and **Eco-design Directive 2009/125/EC**.

MD	IEC/ EN 60335-1 & IEC/ EN 60335-2-89
Eco	Commission regulation (EU) 2015/1095

J & E Hall Limited, Hansard Gate, West Meadows, Derby, DE21 6JN, United Kingdom

Certification

DOC/004-15(3)

DAIKIN REFRIGERATION MALAYSIA SDN. BHD. *(34543-W)*
Lot 10, Jalan Perusahaan 8, Kawasan Perusahaan Pekan Banting, 42700 Banting, Selangor Darul Ehsan, Malaysia.
Tel: +603-31872911 Fax: +603-31878597

EU Declaration of Conformity 2014/68/EU

We declare under our sole responsibility that the following products:

Refrigeration Condensing Unit

Model Designations:

JEHS-0350-B3-M-1	JEHS-0600-B3-M-3	JEHS-0500-B3-L-3	JEHSD-0400-B3-M-3
JEHS-0350-B3-M-3	JEHS-0680-B3-M-3	JEHS-0600-B3-L-3	JEHSD-0600-B3-M-3
JEHS-0400-B3-M-1	JEHS-0800-B4-M-3	JEHS-0750-B4-L-3	JEHSD-0800-B4-M-3
JEHS-0400-B3-M-3	JEHS-1000-B4-M-3	JEHS-0950-B4-L-3 EVI	
JEHS-0500-B3-M-3	JEHS-0400-B3-L-3		

Which are assemblies that containing refrigerating fluids classified in Group 2 and comply the requirements of **PRESSURE EQUIPMENT DIRECTIVE 2014/68/EU**. The details of pressure equipment as listed below.

Pressure equipment	Part description	Category	Conformity assessment
Safety device	High pressure switch	IV	Module B & D
Vessel	Compressor	I or II	- or Module A2 or Module D1
Vessel	Liquid receiver	II	Module A2 or Module D1 or Module B & D
Vessel	Oil separator	I	Module A or Module D1 or Module B & D
Vessel	Check valve	SEP	-
Vessel	Filter drier	SEP	-
Piping	System Piping	SEP	-
Piping	Sight glass	SEP	-
Piping	Coil	SEP	-
Piping	Service valve	SEP	-

Category: II
Evaluation module: A2
Notified body number: 2561
Notified body name & address: Hartford Steam Boiler UK Limited
Unit 7, Brewery Yard, Deva City Office Park, Trinity Way, Salford, M3 7BB, United Kingdom.
Technical standards and specification:
are in conformity with the **Machinery Directive 2006/42/EC** and **Eco-design Directive 2009/125/EC**.

MD IEC/ EN 60335-1 & IEC/ EN 60335-2-89
Eco Commission regulation (EU) 2015/1095

The products are provided with a CE 2561 marking of conformity.

J & E Hall Limited, Hansard Gate, West Meadows, Derby, DE21 6JN, United Kingdom

DAIKIN REFRIGERATION MALAYSIA SDN. BHD.

Teh Yeow Chong
General Manager
Issued Date: 09 May 2017

J & E Hall Limited
Hansard Gate
West Meadows
Derby, DE21 6JN
England

Tel: + 44 (0) 1332 253400
Fax: + 44 (0) 1332 371061
Email: helpline@jehall.co.uk
www.jehall.com

Issue: 01.08.2017