ECOLOGICAL MITIGATION PLAN

11 BOUND LANE, HAYLING ISLAND
HAMPSHIRE.

Viewpoint Associates LLP
Jolesfield Grange
Jolesfield
Partridge Green
West Sussex
RH13 8JT

Tel: 01403 710001

Email: info@view-point.co.uk

STATUS:	**Rev. B**
	10/11/16

Contents:

1. BACKGROUND AND SITE OVERVIEW 3
2. AIMS AND OBJECTIVES 4
3. SITE MITIGATION & PROTECTION 6
4. REFERENCES 16

1. BACKGROUND AND SITE OVERVIEW

1.1. Viewpoint Associates LLP was commissioned to review the Phase 1 Habitat Survey Report, Bat Report and Reptile Report produced by Verdant Ecology and undertake a site survey to inform an Ecological Mitigation Plan for the site. The surveys undertaken in 2015 by Verdant Ecology were required to support a planning application for the proposed development, which includes Outline application for 5No. detached chalet style dwellings, 1No. detached bungalow, and one pair of semi-detached two storey dwellings with ancillary garaging and car parking spaces, creation of new vehicular crossover and closure of two existing access point.

1.2. Planning Permission (APP/16/00327) has subsequently been granted, subject to planning conditions including conditions relating to biodiversity. In the initial survey submitted with the planning application the site was identified as having confirmed presence of a low population of slow worm reptiles, breeding birds, and foraging and commuting bats.

Site Overview

1.3. The development site is located on the eastern side of Bound Lane, Hayling Island. It is located in the southern part of Hayling Island and is approximately 250m from the coast. The immediate surroundings are primarily residential properties with large gardens. The wider area consists of beaches, small settlements, estuary and farmland and open space.

1.4. The site is situated on an area of grassland and former garden of number 11 Bound Lane. The immediate surroundings consisted of grassland, ornamental planting buildings, hardstanding and trees including mature trees. Further protected species surveys following the initial Ecological survey included bat activity surveys and reptile presence/likely absence surveys. No bat roosts were found during the surveys but bat activity was noted for five species of bat although the majority of activity was from common pipistrelle bats. The reptile presence/likely absence survey found that the site supported a low population of slow worm around the site edges which were the most suitable habitat for this species on site.

2. AIMS AND OBJECTIVES

Aims

2.1. Planning permission, APP/16/00327, was granted for the Outline application for 5No. detached chalet style dwellings, 1No. detached bungalow, and one pair of semi-detached two storey dwellings with ancillary garaging and car parking spaces, creation of new vehicular crossover and closure of two existing access point in July 2016.

2.2. One biodiversity related planning condition was included which require discharge prior to commencement of the development. This report has been written to discharge this planning permission. The condition covered within the scope of this report are provided below:

Planning Condition 4

Prior to the commencement of any development activities a single detailed scheme of ecological mitigation, compensation and enhancement measures (including but not necessarily restricted to):

- *site plan showing all ecological mitigation measures;*
- *details of site lighting;*
- *details of reptile mitigation measures;*
- *details of the ongoing management and monitoring of retained/enhanced habitats and who shall be responsible);*

shall be submitted to, and agreed in writing by, the Local Planning Authority. Such details shall be in accordance with the mitigation, compensation and enhancement measures detailed within the Baseline Ecology Survey Report, Bat Survey and Mitigation Report and Reptile Survey and Mitigation Report (Verdant Ecology Ltd, September 2015). Any such measures shall thereafter be implemented in accordance with the agreed details and secured in perpetuity, unless otherwise agreed in writing by the Local Planning Authority.

Reason: To provide ecological protection and enhancement in accordance with the Wildlife & Countryside Act 1981, National Planning Policy framework, NERC Act 2006 and Policy CS 11 of the Havant Borough Local Plan Core Strategy 2011.

Objectives

- The purpose of this Mitigation Strategy is to protect species and the biodiversity interest of the site and enhance the site for wildlife post development. Species which will be specifically targeted are:

    - Bats

- Birds
- Reptiles
- Mammals such as Hedgehogs

2.3. The developer will be responsible for the implementation of the Mitigation Measures during construction. The habitat management and monitoring responsibilities will be passed on to a residents' management company upon completion of the development. Specific funding has been included within the budget of the redevelopment for the provision of mitigation measures. The funding of the long term management of the site's common areas which include the new habitats created on site and monitoring of habitats and species will be provided through a management company. Funding for the management company will be provided through a service charge to all owners and leaseholders.

3. SITE MITIGATION & PROTECTION

Breeding Birds

Construction Phase Impacts

3.1. The site contains habitat suitable for a variety of nesting birds and although the majority of the site clearance will be undertaken outside of the bird nesting season (March- August inclusive), it is likely that some vegetation clearance may need to be undertaken at other times. The following measures will be implemented to ensure that nesting birds are protected during the construction phase.

3.2. *Tool Box Talk*: Prior to commencement of construction or site preparation works a tool box talk will be undertaken to provide contractors with information on the protection afforded to nesting birds, where nesting birds might be encountered and measures to minimise the risk or impact on nesting birds.

3.3. *Timing of Works:* Clearance of any vegetation shall be conducted outside the bird nesting season (March-August inclusive) to avoid disturbing or injuring birds that may be nesting within them. Where this is not possible then the works shall be immediately proceeded by a nesting bird check by a suitably qualified ecologist. This will be someone with at least a years' worth of experience of undertaking nesting bird surveys. If nesting birds are found, a buffer will be provided around the nest of a size suitable to the species and retained until all chicks have fledged. The buffer zone will be clearly marked with hazard tape and signs to prevent human or machine incursions into the buffer zone. The nest, when found, will be assessed to determine the likely time until the chicks have fledged. A suitably qualified ecologist will then attend site around the time that the chicks are likely to fledge. Once it has been confirmed that the nest is no longer in use then the vegetation can be cleared within the buffer zone. No clearance will be permitted until approval from the suitably qualified ecologist has be provided.

Nesting Bird Survey Methodology

3.4. If necessary, the survey methodology employed will be broadly based on that of territory mapping derived from Vantage Point Surveying (Bibby et al, 1992), an accepted method used for the British Trust for Ornithology's (BTO) Common Bird Census. Standard BTO species classifications and subsequent recorded activities for individual birds will be used to identify birds and denote activity, sex and age where appropriate.

3.5. All identified birds will be grouped into one of the following four categories:

- Possible breeder (e.g. birds observed in suitable habitat or singing male recorded)
- Probable breeder (e.g. pair in suitable habitat, territory defended, agitated behaviour or nest building)
- Confirmed breeder (e.g. recently fledged young observed, adult birds carrying food for young)
- Non breeder (e.g. birds that were considered to be not using the site for breeding, such as flying over the site, migrant species or species within unsuitable habitat).

3.6. Visual searches of all vegetation and other potential nest sites such as buildings will also be undertaken for evidence of birds' nests prior to vegetation clearance. Upon discovery, each nest will be assigned one of the following classifications:

- In use; eggs, chicks or brooding bird present
- Evidence of recent use
- Abandoned

3.7. These measures will ensure that contractors on site are aware of the legal protection afforded to nesting birds and where to find them, working measures to minimise the risk to nesting birds and the protocol should vegetation clearance be required. Where vegetation clearance is required a robust survey method by an experienced ecologist will ensure that any nests are located and buffer zones are put in place. The combination of these measures will ensure that the legal protection afforded to nesting birds is met.

Operational Phase Impacts and Mitigation

3.8. New nesting habitat will be provided in the form of new native and hedgerow planting and tree planting. However, it is advisable that, to ensure no net loss in nesting habitat that a minimum of four nest boxes should be installed as part of the scheme. Below are details of the bird box scheme that will be implemented as part of these proposals subject to agreement with the local planning authority.

3.9. These bird boxes have been chosen for their durability as they are made of woodcrete and have a predicted lifespan of around 20 years plus and the specification includes models that will be used by species which are known or are likely to use the site.

3.10. The tree boxes must be installed at least 2m up the trees and away from any features that could allow a predator access into the box such as a wall or fence.

3.11. The location of the 4 bird boxes is provided in Figure 1. The specification for these boxes is as follows:

- 1x Schwegler 1B 26mm hole woodcrete bird box
- 1x Schwegler 1B 32mm hole woodcrete bird box
- 1x Schwegler 2H Robin woodcrete box
- 1x Schwegler 2GR Oval Entrance

Bats

3.12. The site supports foraging and commuting bats species with five common species of bat recorded using the site during activity/automated surveys undertaken in 2015. The proposed design and landscaping proposals will result in some loss of habitat for foraging and commuting bats but new hedgerows, retained and new trees as well as grassland habitats on site will all be provided post development. A mosaic of habitats will continue to be present onsite post development. There will be a small reduction in the number of trees on site. To ensure that there is no loss of roosting opportunities on site post development 2 bat boxes will be installed on retained trees on site (Figure 1). Woodcrete boxes have a life of at least 20 years. All bat boxes will be installed at least 4m up on retained trees and preferably on a southerly aspect.

3.13. These will include the following specification of bat box which have been chosen as they will support a range of species which are present on site:

- 2x Schwegler 1FD
- 1x Schwegler 2F

3.14. The locations of these bat boxes is provided in Figure 1 attached.

Lighting Scheme

3.15. The lighting scheme will ensure that there is no light spillage onto any of these boxes or nearby vegetation. For health and safety reasons the roadway, walkways and doorways will need to be lit by external lights. Full details of the lighting specification is being produced and

this is specification in relation of external lighting is a pre-commencement planning condition. However, the roadway should be lit with the minimum level of bollard lighting using designs which do not allow any upward lighting. These bollards will be around 0.7m in height with lights angled well below 90 degrees to avoid any upwards light. The lights will be LED in warm white which contains little UV which could attract insect prey. The LED bollards will light the floor of roadway with little light spillage. The LED bulb will be baffled to ensure that the light cannot be seen from the side. Where possible these bollards should be dim-able to ensure that the lowest light levels can be achieved. Appendix 1 provides a specification indicative of the type of light fitting that could be used to achieve the above.

3.16. The lighting around the walkways and doorways should also be bollard lighting where possible or wall lighting. These wall lights will be around 1-1.2m in height with lights angled well below 90 degrees to avoid any upwards light. These lights will be used as washlights to light up the floor and not as uplighters. The lights will be LED in warm white which contains little UV which could attract insect prey. The LED wall lights will light the floor of the entrance with little light spillage. The LED bulb will be baffled to ensure that the light cannot be seen from the side. Where possible these bollards should be dim-able to ensure that the lowest light levels can be achieved. The walkways and entranceway lighting should be motion sensor lighting where possible to ensure that the level of lighting is minimal and targeted where needed. Appendix 1 provides a specification indicative of the type of light fitting that could be used to achieve the above.

3.17. *Trees Remedial Works and Removal*: All moderate or high bat potential trees on site must be climbed by a bat ecologist trained in aerial rescue to look for evidence of roosting bats immediately prior to any extensive remedial measures or removal. One tree (tree 25) is to be subject to climbed inspections are marked in purple in Figure 1.

3.18. Tool Box Talk: Prior to commencement of construction or site preparation works a tool box talk will be undertaken to provide contractors with information on the protection afforded to bats, where bats may be found and what they look like and measures to minimise the risk or impact on roosting bats.

Reptiles

Impacts and Mitigation

3.19. A low population of slow worm are present on site, with a maximum count in the 2015 reptile survey of 10 slow worms (Verdant Ecology, 2015). These reptiles were predominantly found within the retained habitat on site.

3.20. Without appropriate mitigation, the following short term impacts on reptiles are predicted:

• Direct killing or injury of reptiles during site clearance.
• Direct killing or injury of animals straying onto the development footprint during construction phase.

3.21. Without sufficient habitat enhancement and mitigation, the following long term impacts on the reptile populations are predicted:

- A permanent reduction in the extent of suitable reptile habitat may limit future population.
- Potential severing of connectivity of habitat corridors for animals to move around the site.
- Reduction in quality of retained habitat through shading of south-facing basking spots from domestic fencing and acoustic sound barriers.

3.22. When reptiles are present on development sites the following aims are applicable (English Nature, 2004):

- To protect reptiles from any harm during the development work
- To ensure that sufficient quality, quantity and connectivity of habitat is provided to accommodate the reptile population, either on-site or at an alternative site, with no net loss of local reptile conservation status.

3.23. The mitigation proposals have been designed to meet the above aims, both during and post completion of works.

3.24. The implementation of these measures during the proposed works will ensure the development has little or no impact on local ecology, and the populations of any potential reptiles using the site.

Construction Phase Impacts & Mitigation Measures

Avoidance of Impact in Retained Habitat

3.25. Key areas of reptile habitat on the site are to be retained around the boundary of the site. These areas had the majority of reptile sightings during the reptile presence/absence survey. The edges of these habitat areas will be affected and their extent reduced in some cases.

3.26. To ensure that no reptiles are harmed during site clearance a translocation scheme is required to remove reptiles from the active construction zone and relocate them in enhanced habitat retained as part of the scheme.

3.27. Protection fencing will be installed around the edge of the construction zone and a minimum 30-day translocation exercise will be undertaken. Translocation will only be undertaken during the reptile active season (March to September inclusive) and in suitable weather conditions. The translocation exercise will only be deemed to have been completed once five consecutive no capture days have been undertaken in suitable weather conditions. A record of all reptiles caught and translocated will be kept including species found and sex and life stage where possible.

3.28. Given the size of the site and the location of the most suitable habitat it is recommended that habitat manipulation and trapping and systematic removal of suitable reptile habitat from the active construction zone is undertaken in combination with a trapping exercise to ensure that all slow worms on site are relocated to the boundaries of the site where the habitat will be retained and protected throughout development.

3.29. Once the trapping out of the active construction zone has been undertaken the site will be destructively cleared under ecological supervision. This will reduce the risk to individual animals and allow any reptiles not caught in the translocation exercise to be caught and removed to the onsite receptor areas. The works area will then be destructively cleared with an excavator under ecological supervision. Once the top layer of soil has been stripped and destructively searched and the area is deemed clear of reptiles by the Ecologist then works can continue unsupervised.

3.30. The partially retained grassland and scrub boundaries will be used as receptor sites for the reptiles caught. It will be necessary to enhance these areas for reptiles to ensure they will provide sufficient shelter and basking opportunities for the number of animals temporarily

concentrated in these areas. Upon completion of the development the reptiles will also have access to the gardens within the new development as additional habitat.

Reptile Receptor Site Habitat Creation.

3.31. A mosaic of rough grassland and scrub patches will be provided post development around the edge of the development. These areas will be subject to minimal management post development apart from biannual cuts to maintain grassland diversity.

3.32. New hedgerows will be provided along all boundaries to ensure that the is connectivity for reptiles and other species across the whole site and to all areas of suitable habitat.

3.33. A minimum of 2 habitat piles and 5 hibernacula should be created in multiple areas of the site. Habitat piles are to be located in a variety of both part shaded and sunny positions, within long grass adjacent to areas of scrub habitat. Habitat piles can be created from native broadleaved tree trunks and branches. A specification for these refugia/log piles is provided in Appendix 2.

3.34. Monitoring and maintenance of fencing to protect the retained areas of habitat shall be undertaken throughout the construction period. A sign to explain the role of the fence will be provided to minimise the risk of the fenceline being removed or impacted by machinery or storage of machinery. All holes and splits should be fixed immediately. Any sections which need to be temporarily taken down should be reinstated immediately.

3.35. Tool Box Talk: Prior to commencement of construction or site preparation works a tool box talk will be undertaken to provide contractors with information on the protection afforded to reptiles and amphibians, where they may be found, how to identify them and measures to minimise the risk or impact on individual common reptiles and amphibians.

Monitoring of reptile population and receptor site habitats.

3.36. The site supports low numbers of slow worm. Given the low population and likely small numbers that will be impacted by the translocation of the active construction zone annual monitoring will not be required. Therefore, it is not anticipated that there is any requirement for reptile population monitoring. However, it is recommended that the habitats on site are assessed in year one and three to ensure that they are fit for purpose and that any potential remedial measures can be addressed.

Table 1 - Summary of reptile mitigation and enhancement measures.

Mitigation or Enhancement	Time Scale	Person to Implement
Erection of reptile protection fencing	Upon completion of reptile survey and prior to any construction works on site	Suitably qualified Ecologist/ contractor
Enhancements to retained habitat /receptor site	As soon as possible to allow habitat to develop. By end of October 2016	Suitably qualified Ecologist/ contractor
Habitat manipulation – systematic removal of vegetation over several weeks and removal of suitable reptile habitat from construction zone	As soon as possible to allow habitat to develop. By end October 2016 to be bedded in for winter 2016	Suitably qualified Ecologist/ contractor
Translocation of reptiles from working footprint into reptile receptor area	Capture for 30days and 5 consecutive days of no capture completed by mid-October 2016 in suitable weather conditions. If not completed before reptile hibernation translocation to continue in March 2017.	Suitably qualified Ecologist
Hand search of all other vegetation to be cleared	After completion of translocations– to be completed within reptile active period (March - October) and in suitable weather	Suitably qualified Ecologist
Destructive search of works area, clearing top soil using an excavator	After completion of translocations – to be completed during reptile active period (March to October)	Suitably qualified Ecologist
Land now clear for all construction works.		

Mammals

3.37. The site has some potential to support species such as hedgehog which will pass through site on occasion.

3.38. *Tool Box Talk*: Prior to commencement of construction or site preparation works a tool box talk will be undertaken to provide contractors with information on the protection afforded to other protected mammals, what habitats they may be found in, how to identify them and their homes and measures to minimise the risk or impact on them. If any mammal holes are found during site clearance, then an Ecologist will be contacted immediately to identify the species using it and will then provide advice on the constraints.

3.39. *Construction Phase Precautionary Measures*: During construction all areas of the site will have all trenches and excavations covered overnight to prevent any animals falling in and becoming trapped. Where it is not possible to cover the excavations then planks will be placed in the holes overnight to allow animals to climb out in the unlikely event that they fall in.

3.40. Operational Phase Measures: Where new fencing will be put in place to delineate the boundary of site this should ideally consist of a hedgerow rather than a fence. However, for security reasons some fencing will be required and without specific mammal access points this will reduce the ease of mammals moving across the site. Therefore, formalised mammal access points will be required. Where the fencing is closed board fencing a hole at least 200mm (H) by 200mm (W) will need to be cut into the gravel board at ground level.

Long Term Management of Wildlife Areas

3.41. Post development the site's common areas which include the wildflower meadow, hedgerows, reptile hibernacula and log piles as well as bat and bird boxes will be subject to ongoing management which will be managed through a management company and funded through a service charge to residents. Below is a summary of the wildlife areas and the management that they will be subject to for the next 10 years.

Wildflower Meadow

3.42. Wildflower seeding with an increased variety of flowering species to provide a nectar source for local wildlife and cover for reptiles. The aim of management of this habitat type to maintain the species richness through twice yearly cuts. One cut in the early spring and one after the flowering has been completed to allow the seeds to be spread for the next year's annual species to propagate. Arising will be left to dry for at least 24hrs after cutting in the late summer to allow seeds to drop from the cut material ready to germinate in the following spring. No fertilisers should be used on this habitat type or where fertiliser

could leach into the ground as any increase in nutrients will result in a reduction of species richness. Problem weeds can be treated with spot on selective herbicide annually where necessary.

Native Hedgerows

3.43. To ensure that the new hedgerows become established and start providing nesting and foraging habitat for birds as soon as possible the hedges will be trimmed twice annually to encourage it to thicken up. After 5 years the requirement to lay the hedge on a regular basis to improve structure. A well laid and maintained hedge should not need relaying for over 20 years.

Log Piles

3.44. Refugia wood piles and hibernacula will be created on site as these features are currently limited resources on site. These habitat piles will provide cover for reptiles and amphibians as well as small mammals and invertebrates. Refugia will be placed in both shaded and sunny spots to increase the microhabitats provided. These will be created to the specification provided in Appendix 2. These log piles will be topped up with additional material every 2-4 years if required.

Bat and Bird Boxes

3.45. The bat and bird boxes have been chosen for their durability and will require minimal maintenance for their 20yr+ lifespan. However, the boxes will need an annual check to ensure they are not damage or requiring any repair.

Table 2 Work Schedule

Mitigation/ Monitoring/ Maintenance Activity	Timing of Works	Pre-development	Construction Phase	Year 1-10
Toolbox talk to contractors	Year round as required	*		
Reptile protection fencing -to be maintained throughout development	Year round as required	*	*	
Creation and enhancement of new habitats	Year round		*	
Prune and maintain new native hedge	2x year			*
Cut wildflower areas	2-3x year. March/ April, August & late autumn October as required			*
Top up log piles with additional logs	Year round as required			As required every 2-4 years
Check and maintain bat boxes - repair or replace where required	Oct-February	Install	*	*

4. REFERENCES

Bat Conservation Trust (2016). *Bat Surveys – Good Practice Guidelines*. Third Edition. BCT London.

Edgar, P., Foster, J. and Baker, J. (2010). *Reptile Habitat Management Handbook*. Amphibian and Reptile Conservation, Bournemouth.

JNCC (2010), *Handbook for Phase 1 Habitat Survey – A Technique for Environmental Audit.* JNCC, Peterborough.

Mitchell-Jones, A.J., (2004). *Bat Mitigation Guidelines*. English Nature, Peterborough.

Natural England, (2011). *Badgers and Development – A Guide to Best Practice and Licensing*. Natural England.

Rose, F., (2006). *The Wildflower Key*. Fredrick Warne.

Wembridge, D. (2011). *The State of Britain's Hedgehogs*. British Hedgehog Preservation Society and Peoples Trust for Endangered Species.

Verdant Ecology (2015) Reptile Survey and Mitigation Report- 11 Bound Lane

Verdant Ecology (2015) Bat Survey and Mitigation Report – 11 Bound Lane

Verdant Ecology (2015) Baseline Ecology Survey Report- 11 Bound Lane

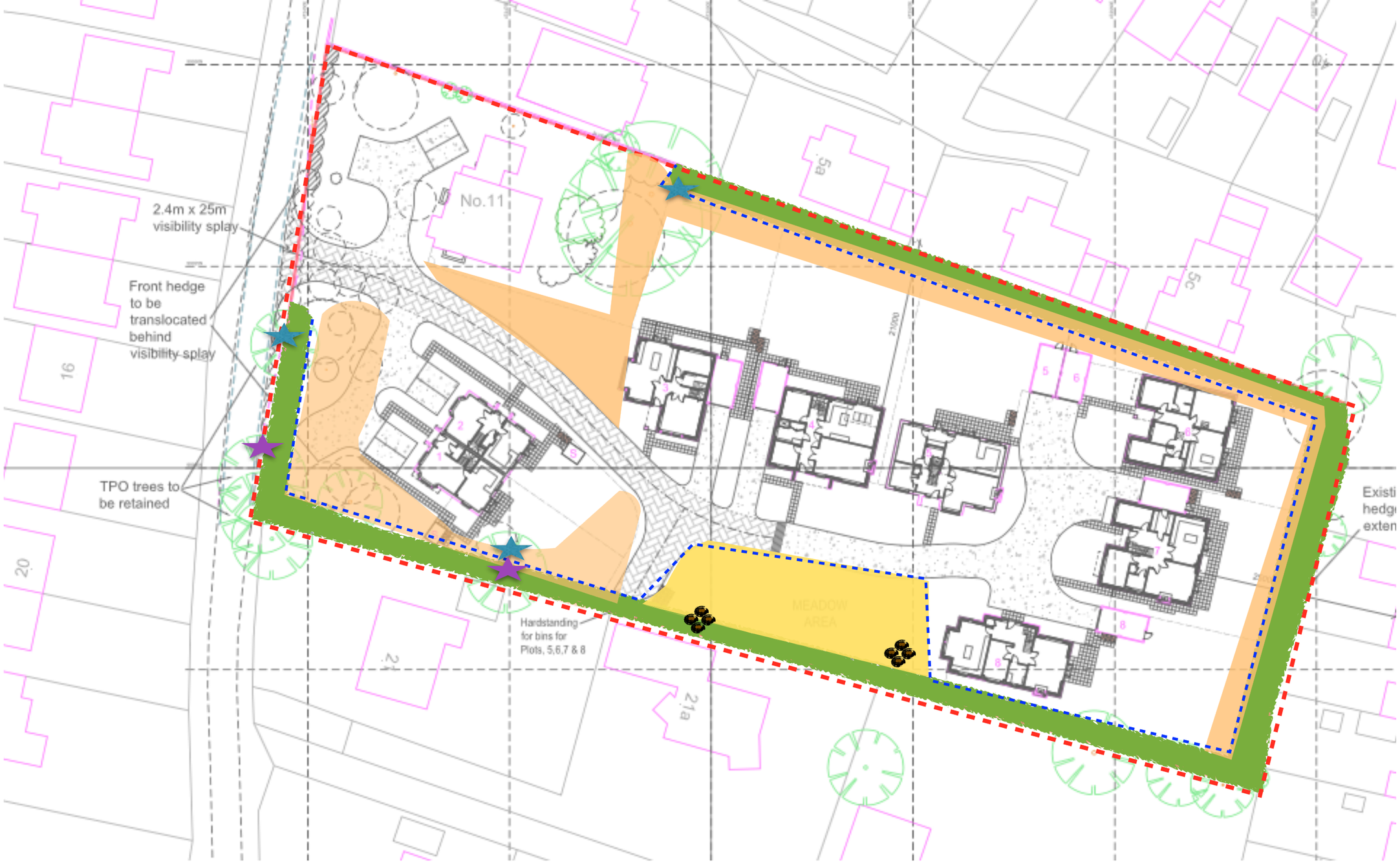

***NOTE Areas are indicative and are not shown to exact scale.**

- Site Boundary
- Hedgerow habitat to ensure connectivity across the site
- Wildflower meadow managed specifically for wildlife - one annual cut to maintain species diversity
- Approximate area of grassland habitat/back garden that will be available to reptiles and local wildlife post development but not specifically managed for wildlife
- Fencing to protected retained areas of habitat.
- Indicative positions of deadwood habitat piles. Predominantly in south facing positions for reptiles.
- Indicative location of woodcrete bat boxes to be installed on retained trees
- Indicative location of woodcrete bird boxes to be installed on retained trees

Project: 11 Bound Lane, Hayling Island, Hampshire

Figure 1 -Ecological Mitigation Plan

viewpoint associates llp

APPENDIX 1: INDICATIVE LIGHTING DESIGNS

ERCO

Kubus Bollard luminaire

Floor washlight

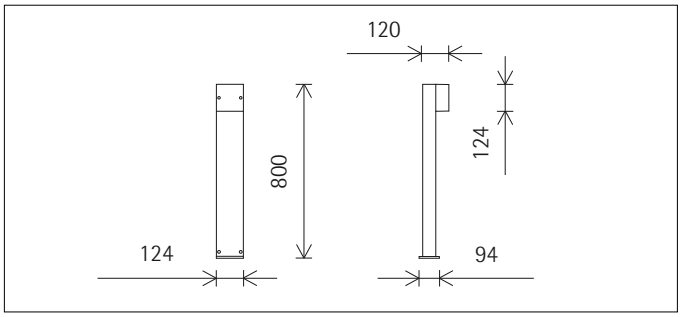

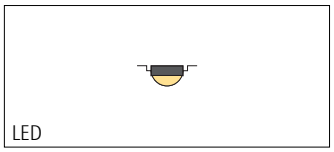

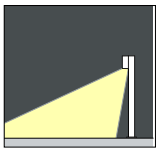

IP 65

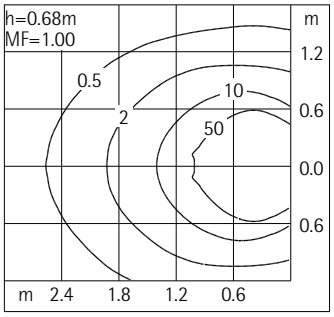

LED 3W 330lm 3000K warm white

33269.000 Graphit m
LED 3W 330lm 3000K warm white
Switchable
Version 7
Connected load 4W
Prism lens, deep beam

Product description
Bollard: aluminium profile, No-Rinse surface treatment. Double powder-coated.
Luminaire housing and base plate: corrosion-resistant cast aluminium, No-Rinse surface treatment. Double powder-coated. Optimised surface for reduced accumulation of dirt.
Base plate for mounting on ground socket, concrete anchor or mounting plate.
Electronic control gear. 2 screwed cable glands M20. Through-wiring possible. 3-pole terminal block.
LED module: high-power LEDs on metal-core PCB. SDCM<2. CRI>90. L80/B10 50000h. Collimating lens made of optical polymer.
Softec lens as safety glass.
Mounting accessories to be ordered separately.
Floor washlight and bollard must be assembled on site.
Protection mode IP65: dust-proof and water jet-proof.
Weight 3.58kg
Energy efficiency class EEI A++
Maximum wind load area 1.00m²
LMF F

ERCO GmbH
Brockhauser Weg 80-82
58507 Lüdenscheid
Germany
Tel.: +49 2351 551 0
Fax: +49 2351 551 300
info@erco.com

Technical Region: 230V/50Hz
We reserve the right to make technical and design changes.
Edition: 02.03.2015
Current version under
www.erco.com/33269.000

ERCO

Kubus Bollard luminaire

Planning data

Cleaning (a)	1				2				3			
Ambient conditions	P	C	N	D	P	C	N	D	P	C	N	D
LMF	0.93	0.86	0.81	0.74	0.88	0.77	0.66	0.57	0.85	0.70	0.55	0.45
RSMF	0.96	0.92	0.87	0.81	0.96	0.92	0.87	0.81	0.96	0.92	0.87	0.81

Hours of operation (h)	1000	2000	4000	6000	8000	10000	20000	30000	40000	50000
LLMF	0.99	0.99	0.98	0.97	0.96	0.95	0.92	0.88	0.84	0.81
LSF	1	1	1	1	1	1	1	1	1	1

MF	LMFxRSMFxLLMFxLSF
MF	Maintenance Factor
LMF	Luminaire Maintenance Factor
RSMF	Room Surface Maintenance Factor
LLMF	Lamp Lumens Maintenance Factor
LSF	Lamp Survival Factor
P	Room pure
C	Room clean
N	Room normal
D	Room dirty

ERCO

Kubus Bollard luminaire

Accessories

34974.000
Distribution box, IP68
With four cable entries, 7-25mm.
Plastic.
ø 102mm, L 305mm.
Weight 0.47kg
IP 68 3m

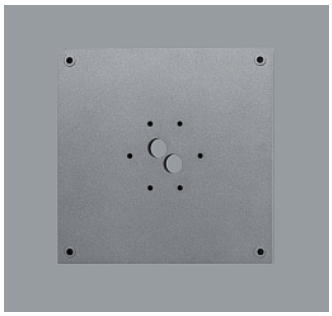

33983.000
Mounting plate
Corrosion-resistant cast aluminium,
No-Rinse surface treatment. Graphit m,
double powder-coated.
Weight 1.00kg

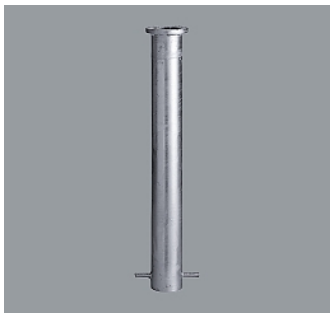

33975.000
Ground socket
Metal, hot-dip galvanised.
Cable entry.
Weight 1.75kg

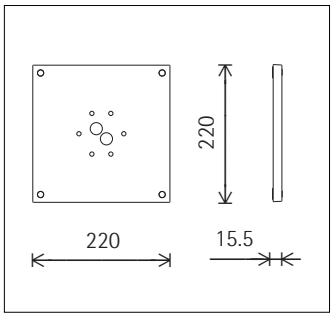

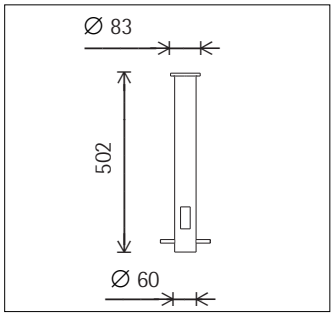

33979.000
Concrete anchor
Mounting plate with threaded bar and
fixing nuts M6. Individual parts to be
assembled on-site.
Weight 0.25kg

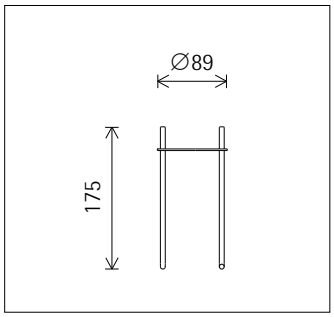

Light from the box

Façade lighting and floor washlighting for outdoor and indoor areas with a single system design

During the day, Kubus is all but an inconspicuous structure on the wall – at night, however, the luminaire excels with exquisite light. Kubus is flexible. Using appropriate accessories, the luminaire can be mounted in or on the wall. Underlined with grazing light, wall surfaces are given a new dimension.
Used along traffic routes, Kubus provides optimum visual comfort and reliable orientation for passers-by. In perfect understatement, Kubus combines highly efficient and maintenance-free optoelectronics with a very discreet appearance. Kubus floor washlights are also available as bollard luminaires.

Washlighting
Wide-beam illumination of pathways and open areas.

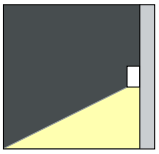

Floor washlights
Asymmetrical washlighting with a wide or deep beam for the illumination of pathways or squares.

LED
3W - 6W
330lm - 795lm
Light distribution: Wide beam, Deep beam

Accentuation
Emphasis of the façade produced by a narrow light beam.

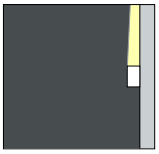

Façade luminaires
Asymmetrical light distribution for accentuated façade lighting.

LED
3W - 6W
330lm - 795lm
Light distribution: Spot, Sculpture lens

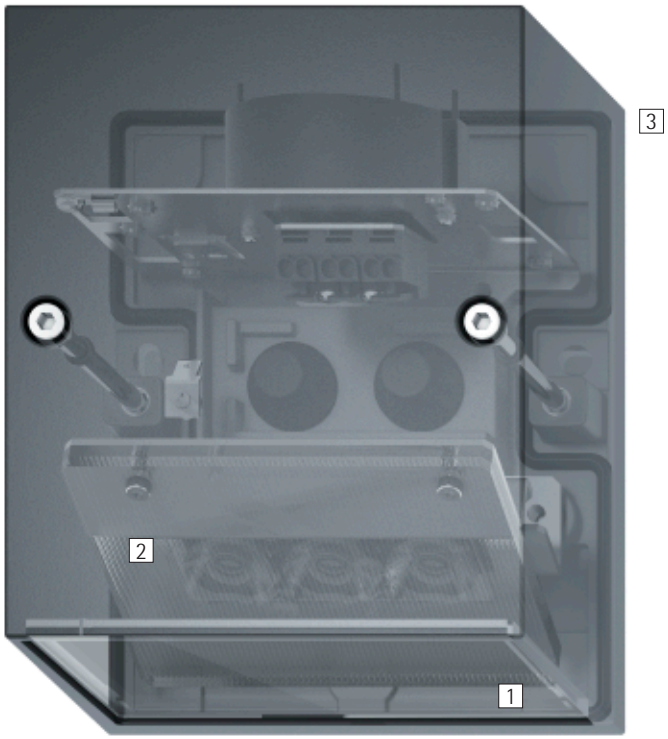

Structure and characteristics
The features described here are typical of products in this range. Special versions may offer additional or varying features. A comprehensive description of the features of individual products can be found on our website. The direct links for quick access always take the same form:

www.erco.com/<article number>

1 Light aperture floor washlight (bottom)
- Softec lens as safety glass or non-reflective safety glass
  Wide beam:
- Sculpture lens or Spherolit lens
  Deep beam:
- Prism lens or Spherolit lens

Light aperture façade luminaire (top)
- Softec lens as safety glass or non-reflective safety glass
- Spherolit lens spot or sculpture lens

2 ERCO LED module
- High-power LEDs on metal-core PCB
- Light colours: warm white or neutral white
- Collimating lens made of optical polymer

3 Housing and wall plate
- Graphit m
- Corrosion-resistant cast aluminium, No-Rinse surface treatment
- Double powder-coated
- Optimised surface for reduced accumulation of dirt
  Control gear:
- Switchable

Protection mode IP65
Dust-tight and water jet-proof

Special characteristics

Different light distributions: wide or deep

Different sizes

ERCO high-power LEDs

Efficient Spherolit technology

Different light colours

Excellent thermal management

EMC-optimised

IP65 Protection mode IP65

Accessories for mounting versions

Switchable

APPENDIX 2: LOG PILE SPECIFICATION

Log Pile Specification
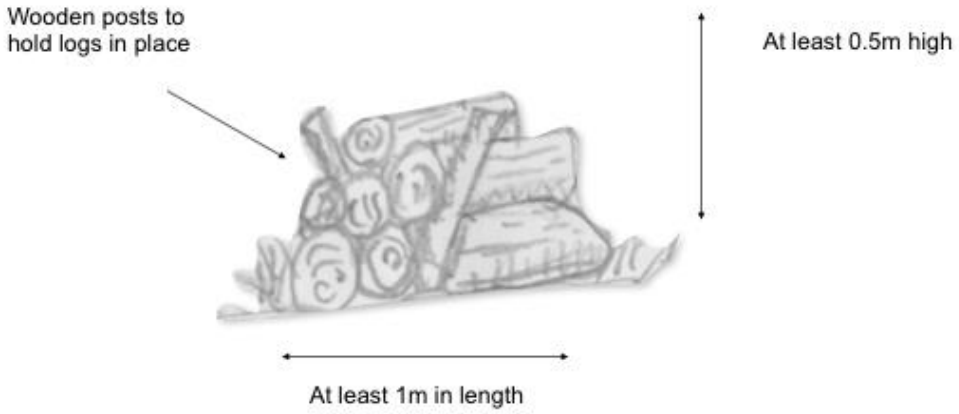
The log pile should be built with the lower logs with a diameter of around 300mm getting smaller in diameter as they are stacked up. Vegetation should be allowed to grow up around the log piles with no mowing within half a meter of the pile.