ARBORICULTURAL METHOD STATEMENT

42c Gladys Avenue, Cowplain

*- prepared on behalf of **Mr & Mrs T Holloway** –*

10 Southleigh Grove, Hayling Island, Hampshire PO11 0SH ***mob: 07875 520881 - email: bernieharverson@gmail.com***

Section	Subject Heading
1	INTRODUCTION & CLIENTS BRIEF
2	DOCUMENT DISCLOSURE STATEMENT
3	TREE SURVEY & ROOT PROTECTION SCHEDULE
4	IMPACT ASSESSMENT & TREE PROTECTION MEASURES RECOMMENDED
5	RECOMMENDED TREE WORK
6	METHOD STATEMENT
7	MONITORING & SUPERVISION
8	CONCLUSIONS

Appendices	Subject
BH1	Figure 1- Flow Diagram from BS5837 + Tree Survey Notes
BH2	Tree Survey Plan **BJH 01** & Root Constraints Plan – **BJH 02**
BH3	Tree Retention & Removals Plan **BJH 03** & Tree Protection Plans – **BJH 04 + Figure 2 Diagram**
BH4	Qualifications & Experience

1.0 INTRODUCTION & CLIENTS BRIEF

1.1 I am instructed on this project by **Mr & Mrs T Holloway** who own the property at **42c Gladys Avenue, Cowplain**

1.2 My clients wish to redevelop and remodel the property by extending to the front and rear elevations.

1.3 There is an off site TPO'd Oak tree which will need to be catered for in this process.

1.4 I have been commissioned to prepare a report to satisfy the arboricultural aspects of this project in accordance with BS5837:2012 recommendations.

2.0 DOCUMENT DISCLOSURE STATEMENT

- I have been provided with **J B Architecture** scaled drawings showing the existing and new layouts in relation to the trees :-
  - **Existing Site Plan – Ordnance Survey Extract - PL.801.24 - 08 – 1:250 @ A3- Feb 2024.**
  - **Proposed Site Plans – Proposed Extensions – PL.801.24 Rev 08 – Rev A - 1:250 @ A3- June 2024.**
  - these drawings have been provided to me for the purposes of my work and I rely totally on their accuracy in terms of tree locations; applying crown spreads and setting out protective fencing.

3.0 TREE SURVEY & ROOT PROTECTION SCHEDULES & IMPACT ASSESSMENT

3.1 I visited the site on **4th June 2024** to undertake a tree survey exercise in accordance with BS5837:2012 recommendations (see also the explanatory tree survey notes **at appendix BH1**).

Tree No.	Species	Ht m	Diam mm	Brch Sprd m	GC m	LS	Comments	Preliminary Management Recommendations	Rem Con yrs	Cat
1	Pedunculate Oak *Quercus robur*	16	900	N 12 E 12 S 9 W8.5	3	M	TPO'd tree-bifurcated at 2m above ground-previously pruned back on west side-small deadwood throughout and also a few larger diameter branches.	Not under the clients control	>40	B1

3.2 A Tree Root Protection Schedule has been prepared in accordance with BS5837:2012 recommendations (see Plans BJH 01 & 02 at **appendix BH2**)

Tree No.	Tree Species	Cat	Diam mm	BS5837:2012 Table D1 Radial Protection Zone m	BS5837:2012 Table D1 Polygon Area m^2
1	Pedunculate Oak *Quercus robur*	B1	900	10.8	366

4.0 IMPACT ASSESSMENT & TREE PROTECTION MEASURES RECOMMENDED

4.1 The finalised planning layout drawing has been provided to me and an assessment made as to the viability of retaining trees as part of this layout in order that they meet the RPZ requirements of BS5837 - the data is presented here in tabular format:-

Key: **NO-RSAM** = Remove for sound arboricultural management reasons regardless of any redevelopment proposals **NO-RTFD** = Remove to facilitate development

YES = Yes can be retained and fully protected **YES (1) =** Yes can be retained subject to mitigation measures being applied

Tree No	Species	Cat	Stem Diam mm	BS5837:2012 Table D1 Protection Zone m	BS5837:2012 Table D1 Protection Area m^2	Distance from Site Features & Comments (see key above)	Can Tree Be Retained
1	Pedunculate Oak *Quercus robur*	B1	900	10.8	366	14.9m to existing rear building line. 10.8m to footings of new extension	**YES (1)**

Summary

4.2 This survey took into account one off site TPO'd Oak tree that might be impacted by the redevelopment proposals.

4.3 Measurements taken on site confirm that the RPZ of 10.8m radius can be fully accommodated with certain proviso's as regards ground protection during the construction process.

5.0 RECOMMENDED TREE WORKS

No	Species	Tree Works Recommended
1	Pedunculate Oak *Quercus robur*	• Not under clients control. • Has significant low branch overhang of the site boundary and I recommend that the owner applies in writing to the Council seeking approval to some reduction and reshaping on this side of the tree to allow for full enjoyment of their garden and improve light percolation to same.

6.0 METHOD STATEMENT

Generic Protection Measures

6.1 There will be no requirement for protective fencing on this project but ground protection measures in accordance with BS5837:2012 Section 6.2.3.3 will need to be applied as shown on the **Tree Protection Plan BJH03/04** **at appendix BH3.**

6.2 The following prohibitions shall apply within the area of this trees 10.8m RPZ [**Construction Exclusion Zone**]:-

- **No** mechanical digging or scraping is to be carried out within the site fenced off zone.
- **No** storage of plant, equipment or materials within the site fenced off zone.
- **No** vehicular or plant access within the site fenced off zone.
- **No** fire lighting within the site fenced off zone.
- **No** handling, discharge or spillage of any chemical substance, including cement washings within the site fenced off zone.
- **No** action likely to cause localised water-logging is to be carried out within the site fenced off zone.
- **No** change in ground levels is to occur within the site fenced off zone.

6.3 All site works storage areas and compounds/welfare units/toilet blocks and any mixing areas are to be located outside the fenced off zone and ideally positioned over impervious surfaces or over special catchment areas such that any leakage will be captured and cannot leak into the soil causing contamination.

6.4 The full details of the proposed utility service links have not been made available to me at this time but there should be no need to install these within the fenced off zones as they would naturally link in to the existing ones for the main house. However, if this situation changes and in the event that there is any conflict with a retained trees RPZ then a separate Mini Method Statement would need to be submitted to cover this work.

Site Specific Protection Measures

6.5 **Ground Protection Measures**

- **Either** retain the existing plastic grass surfacing and part of the patio slab area [slabs cut with an angle grinder] up to the footings for the duration of the build process.
- **Or** remove these existing surface treatments and lay ground protection in accordance with BS5837:2012 Section 6.3.3.3 – i.e. geotextile membrane overlaid with 100mm wood chippings covered with marine grade plyboard or butted together scaffold boards.

7.0 SITE MONITORING & SUPERVISION

7.1 A Pre-commencement site meeting [or photographic evidence submitted] will need to be scheduled to take place between the development teams arboricultural consultant and the site manager and client representative where the ground protection measures would be inspected to verify that they are 'Fit For Purpose' as shown on the **Tree Protection Plan at appendix BH3.**

7.2 This is an example of the format for the **Site Monitoring Schedule** that would be prepared ready for submission to the local authority planners :-

Schedule Of Site Monitoring & Supervision for – 42c Gladys Avenue, Cowplain

- **In accordance with the Arboricultural Method Statement Report - 1366.bjh.June 24 & Tree Protection Plan - BJH 03/04**

Date of Inspection	Item	In Attendance	Notes/Observations From Inspection	Details Of Any Follow Up Action Required
tba	**Pre-Commencement Checks :** **Ground Protection**	Site Owners Representative & Project Arboricultural Expert	• The site was inspected [or photographic evidence reviewed] and I can confirm that the tree protection measures carried out are 'Fit For Purpose' and meet with BS5837:2012 recommendations.	• **None required.**

8.0 CONCLUSIONS

- This redevelopment proposal will not require the loss of any trees.
- The retained off site tree can be fully protected in accordance with BS5837:2012 recommendations.
- Provided that the methodology set out in this report is strictly adhered to in a carefully considered and phased and supervised manner then I would not foresee any detrimental impact taking place that might undermine the ongoing health and stability or visual amenity value of those trees shown for retention.

Bernie Harverson
arboricultural consultant

BH 1

Figure 1 - Flow Diagram
& Tree Survey Notes

Figure 1 The design and construction process and tree care

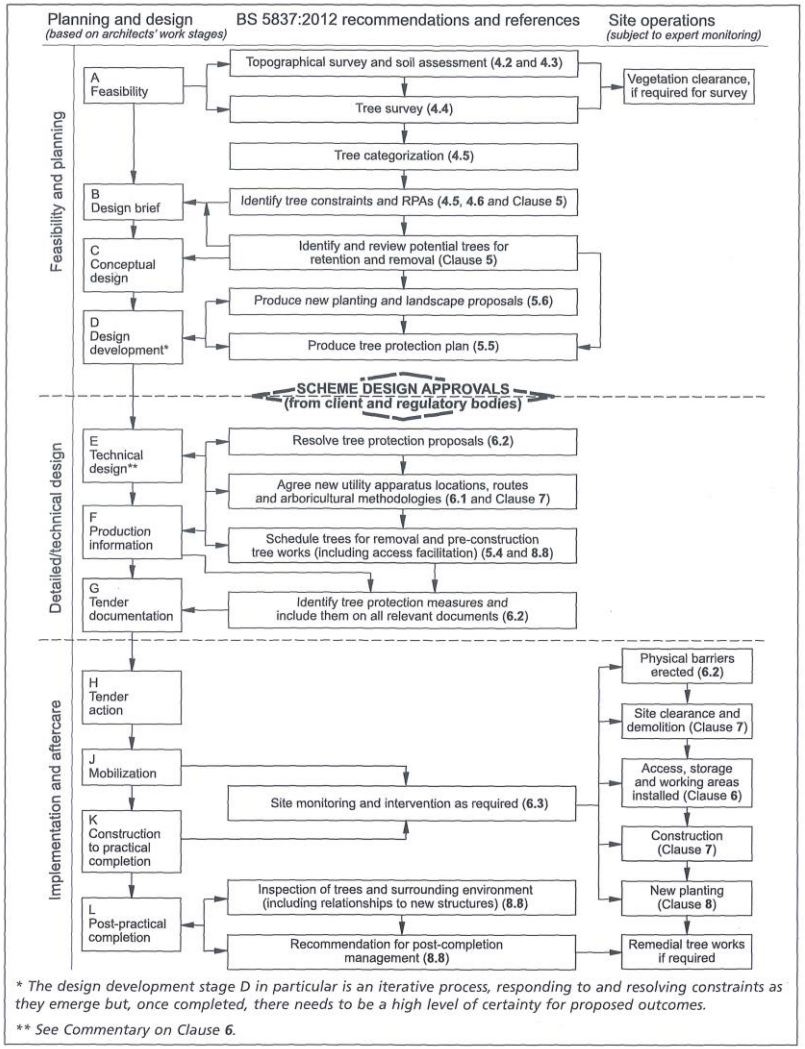

TREE SURVEY NOTES

These Tree Survey Notes have been prepared in accordance with the recommendations of **British Standard 5837:2012** and they define the criteria for pre –development tree surveys.

- Each tree/group/hedge/shelterbelt/woodland has been allocated a unique number (**No.**). where specifically requested and appropriate fees are agreed small durable numbered metal tags can be applied to each tree/group surveyed.
- The tree species (**Species)** is provided in both English and Latin name formats.
- Height assessments (**Ht**) are estimated in metres. This will be adequate for the majority of cases, but where accurate heights become a critical issue it may be necessary to return to site, as a separately commissioned exercise, to collect accurate measurements with the aid of optical instruments.
- Trunk/stem diameters (**Diam**) are measured in millimetres **at 1.5m above ground level** – where the tree is inaccessible the diameter is estimated as indicated by suffix **#**
- Radial crown spread assessments (**Brch Sprd**) are estimated in metres from the centre of the trunk/group to each of the four primary points of the compass (**N**-north**; E**-east**; S**-south and **W**-west**)** in order to achieve a representation of the crown shape which will be shown on the accompanying tree survey plan. These provide a general guide as to the main bulk outline of a tree/groups crown but **are not tape measured dimensions.** These would only be undertaken as part of a separately commissioned exercise, where precise dimensions are critical to the project at hand.
- Both the canopy ground clearance (**GC**) and the height & compass direction of the lowest major branch (**LMB**) are estimated and shown in metres
- An assessment of a tree/groups 'life stage' (**LS)** is made in terms of its site specific maturity as part of the surrounding landscape, taking into account its overall shape and form in that setting, and is recorded thus :-
  Y - Young tree/group; **SM - Semi**-Mature tree/group; **EM -** Early-Mature tree/group;
  M – Mature tree/group; **OM -** Over – mature tree/group
- Data on the structural condition (**Condition Comments)** of the tree/group is provided to give its visual appearance and any significant health and safety issues.
- Details of any recommended tree works required at the time of survey is given under the heading – **Preliminary Management Recommendations.**
- An estimate of a tree/groups remaining contribution in years (**RC)** is made and is recorded thus :- **0-5; 5-10; 10-20; 20-30; 30-40** or **>40** years**.**
- The category grading (**Cat)** for each tree/group is assessed according to the criteria provided within **BS5837:2012.** The assessment is made of the tree/group in its current condition and within the environment encountered bearing in mind its suitability for retention as part of any future proposed development; although the exact layout detail of any specific scheme will not be known at the time of surveying. The trees have been classified into one of four categories and colour coded as BS5837 recommends :- **U** (dark red); **A** (light green); **B** (mid-blue) and **C** (grey).Please note that suffixed numerical sub-categories are also applied for guidance only and do not carry any cumulative or increased value for the tree/group. This colour coding scheme will be applied to all drawings provided.

Table 1 – Cascade chart for tree quality assessment

Category and definition	**Criteria**			**Colour on plan**
Trees unsuitable for retention				
Category U Those in such a condition that they cannot realistically be retained as living trees in the context of the current land use for longer than 10 years.	• Trees that have a serious, irremediable, structural defect, such that their early loss is expected due to collapse, including those that will become unviable after removal of other category U trees (i.e. where, for whatever reason the loss of companion shelter cannot be mitigated by pruning) • Trees that are dead or are showing signs of significant, immediate, and irreversible overall decline • Trees infected with pathogens of significance to the health and/or safety of other trees nearby, or very low quality trees suppressing adjacent trees of better quality NOTE Category U trees can have existing or potential conservation value which it might be desirable to preserve.			**Dark Red**
Trees to be considered for retention				
	Criteria – Subcategories			
	1	**2**	**3**	
Category A **Trees of high quality** with an estimated remaining life expectancy of at least 40 years	Trees that are particularly good examples of their species, especially if rare or unusual, or those that are essential components of groups or formal or semi-formal arboricultural features (e.g. the dominant and/or principal trees within an avenue)	Trees, groups or woodlands of particular visual importance as arboricultural and /or landscape features	Trees, groups or woodlands of significant conservation, historical, commemorative or other value (e.g. veteran trees or wood-pasture)	**Light Green**
Category B **Trees of moderate quality** with an estimated remaining life expectancy of at least 20 years	Trees that might be included in the category A, but are downgraded because of impaired condition (e.g. presence of significant though remediable defects including unsympathetic past management and storm damage), such that they are unlikely to be suitable for retention for beyond 40 years; or trees lacking the special quality necessary to merit the category A designation	Trees present in numbers, usually growing as groups or woodlands, such that they attract a higher collective rating than they might as individuals; or trees occurring as collectives but situated so as to make little visual contribution to the wider locality	Trees with material conservation or other cultural value	**Mid Blue**
Category C **Trees of low quality** with an estimated remaining life expectancy of at least 10 years, or young trees with a stem diameter below 150mm	Unremarkable trees of very limited merit or such impaired condition that they do not qualify in higher categories	Trees present in groups or woodlands, but without this conferring on them significantly greater collective landscape value, and/or trees offering low or only temporary/transient landscape benefits	Trees with no material conservation or other cultural value	**Grey**

Bernie Harverson
arboricultural consultant

BH 2

Tree Survey & Root Protection Plans

BJH 01/02

Bernie Harverson
arboricultural consultant

BH 3

Tree Protection Plan BJH 03/04

+ BS5837 Figure 2 Diagram
+ BS5837 Section 6.2.3.3

Figure 2 **Default specification for protective barrier**

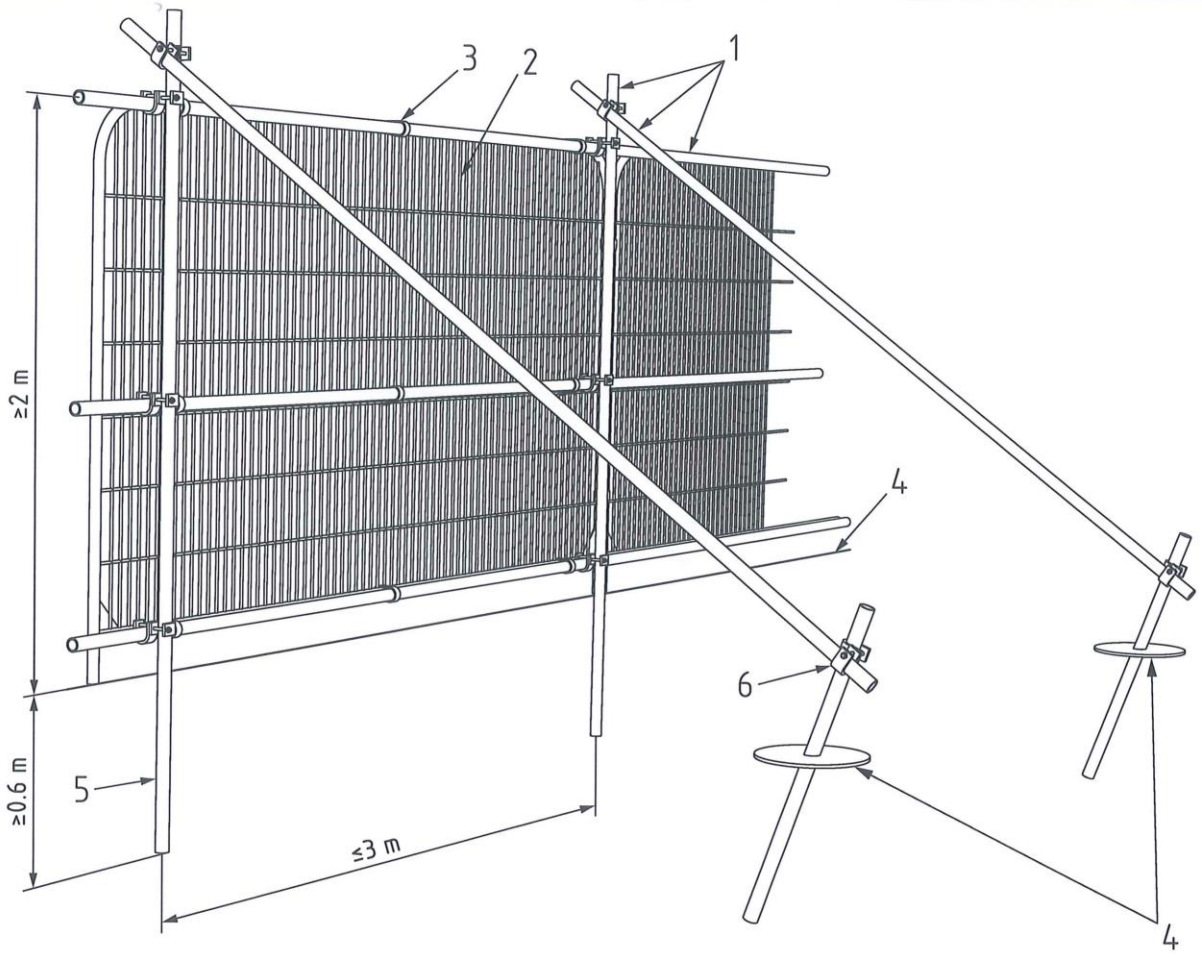

Key

1 Standard scaffold poles

2 Heavy gauge 2 m tall galvanized tube and welded mesh infill panels

3 Panels secured to uprights and cross-members with wire ties

4 Ground level

5 Uprights driven into the ground until secure (minimum depth 0.6 m)

6 Standard scaffold clamps

BS5837:2012 – Section 6.2.3.3 - New temporary ground protection should be capable of supporting any traffic entering or using the site without being distorted or causing compaction of underlying soil.

Note The ground protection might comprise one of the following:

a) for pedestrian movements only, a single thickness of scaffold boards placed either on top of a driven scaffold frame, so as to form a suspended walkway, or on top of a compression-resistant layer (e.g. 100mm depth of woodchip), laid onto a geotextile membrane;

b) for pedestrian –operated plant up to a gross weight of 2t, proprietary, inter-linked ground protection boards placed on top of a compression-resistant layer (e.g. 150mm depth of woodchip), laid onto a geotextile membrane;

c) for wheeled or tracked construction traffic exceeding 2t gross weight, an alternative system (e.g. proprietary systems or pre-cast reinforced concrete slabs) to an engineering specification designed in conjunction with arboricultural advice, to accommodate the likely loading to which it will be subjected.

Bernie Harverson
arboricultural consultant

BH 4

Qualifications & Experience

Bernie Harverson
arboricultural consultant

QUALIFICATIONS AND EXPERIENCE

- My name is **Bernie Harverson** and I am a self employed independent arboricultural consultant in private practice. I take instructions primarily in the South of England but also on occasions work nationwide and abroad and have offices at : –

10 Southleigh Grove, Hayling Island, Hampshire PO11 0SH

- I hold the following arboricultural qualification – **National Diploma in Arboriculture** (***Royal Forestry Society – 1976***)
- I have **fifty-three (53)** years of practical and managerial experience in the arboricultural industry including periods in both the public and private sectors.
- My Local Government sector experience comprises one year as a tree surgeon with Brighton Parks and nine years spent in Arboricultural Officer posts with both Westminster City Council and Portsmouth City Council.
- My past practical experience in the private sector includes two years at Tilhill Forest Nursery and over ten years for various companies as a Climbing Arborist/Tree Surgeon.
- Managerial work in the private sector includes two years as manager of Beechings Tree Surgeons and twelve years with CBA Trees as Managing Director & Senior Arboricultural Consultant.
- As an independent self employed Arboricultural Consultant I now provide a comprehensive range of services including :-
  tree surveys, appraisals, assessments and inspections with particular reference to planning and development and tree safety audits with a service offered as a climber to undertake full climbing inspections to better understand the condition of a given tree before prescribing a management strategy.
- I also undertake litigation work appearing as an Expert Witness in Court Actions and at Planning Appeals, Hearings and Public Local Inquiries.

10 Southleigh Grove, Hayling Island, Hampshire PO11 0SH

mob: 07875 520881 - email: bernieharverson@gmail.com