Trevor Heaps
Arboricultural Consultancy Ltd.

12 Plover Drive, Milford-on-Sea, Hampshire, SO41 0XF - Tel: 07957 763 533

Email: trevor@trevorheaps.co.uk • www. trevorheaps.co.uk

Arboricultural Impact Assessment
Method Statement & Tree Protection Plan
(to BS:5837 2012)

Land at Bartons Road, Havant
PO9 5NB

Prepared for Anavo Developments Limited

Prepared by Trevor Heaps BSc, MICFor, RC. Arbor. A

Date: 9th December 2024

Ref: TH 3923

AA Registered CONSULTANT trees.org.uk

Institute of Chartered Foresters
Registered Consultant

Summary

It is proposed to construct a 78 bed residential care home.

The proposals will require the removal of about 9 trees (mostly Ash trees, many of which are starting to be affected by Ash die-back).

To mitigate, numerous new trees and shrubs will be planted post-construction as part of a comprehensive re-landscaping plan.

Some basic tree protection measures and working methodology (in accordance with BS 5837:2012) will ensure the retained trees are not detrimentally affected during construction.

The relationship between the proposal and retained / third-party trees is sustainable and will not result in any unreasonable pressure to carry out inappropriate tree works.

If the proposal is implemented in accordance with the recommendations laid out in this report, neither the trees or wider landscape will be adversely affected.

This is an arboriculturally defensible scheme and there are no (arboricultural) reasons why planning consent should not be granted.

© Trevor Heaps Arboricultural Consultancy Ltd.

Contents

1.0 Introduction 1

2.0 Instruction 1

3.0 Drawings provided 1

4.0 Report context 1

5.0 Statutory tree protection 2

6.0 Ecological constraints 3

7.0 The site 3

8.0 The soil and topography 3

9.0 Arboricultural Impact Assessment (AIA) and Tree Protection Methods 3

10.0 Conclusions 6

11.0 The Arboricultural Method Statement (AMS) 6

12.0 Arboricultural supervision 8

13.0 Signature 9

Appendix 1 - Professional résumé 10

Appendix 2 - Tree data schedule 11

Appendix 3 - Tree data schedule explanatory notes 15

Appendix 4 – Specifications for tree protective measures 17

Appendix 5 – General precautions and further information 32

Appendix 6 - Procedure to follow in case of damage to retained trees 34

Appendix 7 - Induction form for all site personnel 35

Appendix 8 - Site inspection record 36

Appendix 9 - Tree Constraints Plan 37

Appendix 10 - Tree Protection Plan ..... End of Report

© Trevor Heaps Arboricultural Consultancy Ltd.

1.0 Introduction

1.1 I am Trevor Heaps, Director of Trevor Heaps Arboricultural Consultancy Ltd. I hold a First-Class Honours Degree in Arboriculture; I am a Chartered Arboriculturist and a professional member of the Institute of Chartered Foresters; and I am also a Registered Consultant with the Arboricultural Association. Further information about my qualifications and experience is provided in Appendix 1.

1.2 Contact details:

Who	Name	Organisation	Details
Arboricultural Consultant	Trevor Heaps	THAC Ltd., 12 Plover Drive, Milford-on-Sea, Hampshire, SO41 0XF	Tel: 07957 763 533 trevor@trevorheaps.co.uk
Client		Anavo Developments Limited	
Havant Borough Council - LPA	Tree Officer	Public Service Plaza, Civic Centre Road, Havant, PO9 2AX	Tel: 023 9244 6015 E-mail: planning.development@havant.gov.uk

2.0 Instruction

2.1 We are to survey all significant trees that could be affected by the proposed works.

2.2 We are then to prepare a report to appraise the effect these works will have on any nearby trees and the surrounding landscape.

2.3 We are then to set out recommendations for the protection of the trees during development - in accordance with British Standard 5837:2012 'Trees in relation to design, demolition and construction – Recommendations' (BS5837).

3.0 Drawings provided

3.1 Hardworks Plan – Ref. 5245 02 Rev E – Dated May 24 - Drawn by DEP Landscape Architecture Ltd.

4.0 Report context

4.1 The site was surveyed by Trevor Heaps on the 18th March 2023.

4.2 The trees were surveyed from within the site at ground level. No climbed inspections were carried out and no root/soil samples were taken for analysis.

© Trevor Heaps Arboricultural Consultancy Ltd.

4.3 The trees were inspected based on the Visual Tree Assessment (VTA) developed by Mattheck & Breloer (The Body Language of Trees, 1994).

4.4 Tree heights, crown spreads and stem diameters were measured with a clinometer, a Disto laser measure and a diameter measuring tape respectively.

4.5 Small trees and shrubs (with stem diameters less than 75mm) were not surveyed.

4.6 This report is based on the information provided (i.e. site plans, proposed drawings, scales, measurements etc.) and our observations during the site visit.

4.7 This report will support a planning application or an application to discharge a tree-related condition and its purpose is to assist and inform the planning process.

4.8 This report does not set out the detailed, working specifications of tree protection measures and engineering / design features, but provides sufficient detail to demonstrate the feasibility of the scheme in principle.

4.9 The report does not assess the potential influence of trees upon load-bearing soils beneath existing and proposed structures (resulting from water abstraction by trees on shrinkable soils).

5.0 Statutory tree protection

5.1 We were advised that four trees (Trees T1, T6, T8 & T 35) within / adjacent to this site are covered by a Tree Preservation Order (TPO); which means that if any tree works are required (to the protected trees), an application must be made to the Council (works (unless the works are approved by virtue of this report being approved as part a planning permission – but please see 5.2).

5.2 Even if approved by way of this report, the Council's consent IS required for works on trees subject to a TPO / within a Conservation Area if:

- Development under a planning permission has not been commenced within the relevant time limit (i.e. the permission has 'expired');
- Only outline planning permission has been granted; or
- It is not necessary to carry out works on protected trees to implement a full planning permission.

© Trevor Heaps Arboricultural Consultancy Ltd.

6.0 Ecological constraints

6.1 The Wildlife and Countryside Act 1981 (as amended by the Countryside and Rights of Way Act 2000) provides statutory protection to birds, bats and other species that inhabit trees.

6.2 In addition to any tree matters considered in this report, these protected animals could impose significant constraints on the use and timing of access to the site.

7.0 The site

7.1 This property is situated within a semi-rural part of Havant.

8.0 The soil and topography

8.1 The soils at this site were determined using information provided by the British Geological Survey and observations during the site visit.

8.2 The site is more-or-less level with no adverse features, and the soil texture is clayey loam to sandy loam. The soil parent material is Colluvium.

8.3 The soil is deep, and so a thick soil profile is likely. Soil (and any underlying parent Material) should be easily dug to a depth of more than one metre.

8.4 Given the information above, the soil has the potential of becoming compacted (which is harmful to tree roots).

9.0 Arboricultural Impact Assessment (AIA) and Tree Protection Methods

9.1 The following section describes the potential effects the construction works will have on the subject trees. Mitigation measures are recommended, and this information should be read in conjunction with the supporting Tree Protection Plan (TPP).

9.2 Further information on the subject trees is provided in Appendices 2 & 3.

© Trevor Heaps Arboricultural Consultancy Ltd.

9.3 Trees to be removed to facilitate development

9.3.1 The proposals will require the removal of about 9 trees (mostly Ash trees, many of which are starting to be affected by Ash die-back).

9.3.2 To mitigate, and to increase the net number of trees, at least 29 new trees will be planted within the site.

9.3.3 This re-planting scheme will significantly enhance the amenity and arboreal character of the local area in the longer term.

9.3.4 It is normally appropriate to deal with re-planting matters by condition or by way of a landscape plan; however, several potential re-planting locations have been shown on the proposed plans; and the following details can be confirmed at this stage:

- The new trees will be of standard size (about 2-3m high);
- The new tree species will be carefully chosen to suit the site conditions and reflect the existing arboreal character of the local area;
- The new trees will be planted in full accordance with current British Standards (BS 8545: From Nursery to Independence in the Landscape);
- Once planted, the trees will be regularly maintained (watered and weeded during the spring and summer months) for at least 5 years or until established.

9.4 Physical damage to stems of retained trees

9.4.1 There is a risk that the crowns and stems of some of the retained trees could be accidentally damaged during development.

9.4.2 To minimise this risk, protective fencing will be erected in front of their stems and, where space allows, along their canopy extents.

© Trevor Heaps Arboricultural Consultancy Ltd.

9.5 Soil compaction around retained trees

9.5.1 Soil compaction can be caused by various construction-related activities such as storage or materials and the use of heavy machinery (or even heavier than normal pedestrian access during works). It is harmful to tree roots because it reduces gaseous exchange and the availability of water and nutrients.

9.5.2 To avoid the roots of the retained trees being affected by soil compaction, all vulnerable areas will be separated from the working area by protective fencing and ground protection.

9.6 New roads and parking spaces to be laid within RPA of retained trees

9.6.1 Several access roads and areas of car parking are to be constructed within the RPAs of trees to be retained.

9.6.2 To minimise root disruption during construction and allow for root growth afterwards, these new parking spaces will be 'no-dig and permeable (i.e. raised paths and permeable block paving).

9.6.3 To ensure an adequate level of ground protection is provided during all stages of development, these new surfaces will be created after all heavy construction works have taken place. Until this time, the areas will be covered with heavy duty ground protection.

9.7 New raised paths to be laid within RPA of retained trees

9.7.1 A new access path is to be constructed within the RPAs of three retained trees.

9.7.2 To minimise root disruption, they will be raised (no-dig) and permeable.

9.7.4 The ground levels beneath will not be changed in anyway.

9.8 Underground services

9.8.1 The proposals will be designed in such a way as to either connect directly to existing underground services (with no further excavations) <u>or</u> be connected to existing services using a route outside the RPAs of trees shown retained.

9.8.2 If existing services within RPAs require upgrading, care shall be taken to minimise disturbance and where practicable, trenchless techniques employed; only as a last resort should open excavations be

© Trevor Heaps Arboricultural Consultancy Ltd.

considered. Where existing services within RPAs are deemed not satisfactory for any further use, they should be left in situ rather than being excavated or removed.

9.8.3 If, for whatever reason, the proposed services need to be moved (and incursions into RPAs are unavoidable), then the installation works will be carried out under full arboricultural supervision and will, at the very least, comply with the methods and guidelines detailed in the National Joint Utilities Group publication NJUG 4, Guidelines for the Planning, Installation, and Maintenance of Utility Services in Proximity to Trees (November 2007).

10.0 Conclusions

10.1 The proposals will require the removal of about 9 trees. To mitigate, and to increase the net number of trees, at least 29 new trees will be planted within the site.

10.2 The retained / third-party trees will be protected using up-to-date methodology and guidance provided by the current British Standards (BS 58378:2012). To this end, a site-specific AMS and TPP have been provided. These are found in Section 11 and Appendix 9 respectively.

10.3 Provided the recommendations laid out in this report are followed, the proposals will not detrimentally affect the trees and, with the suggested tree re-planting, will improve and enhance the character and appearance of the local area.

10.4 The trees do not cause any significant conflicts in terms of construction activities, nor will any significant issues of post-development pressure be likely to emerge that could not be managed with routine, minor tree maintenance.

11.0 The Arboricultural Method Statement (AMS)

11.1 Effective tree protection relies on following a logical sequence of events and arboricultural supervision. This AMS lays down the methodology for all construction works that may influence significant trees and recommendations for arboricultural supervision are provided in Section 12.

11.2 It is essential that this AMS is observed and adhered to. Therefore, a copy of this AMS must be issued to the building contractor to be integrated into their work schedule and must also be permanently made available on-site for the duration of development.

11.3 This AMS should be read in conjunction with the supporting Tree Protection Plan (TPP), which is found in Appendix 9.

© Trevor Heaps Arboricultural Consultancy Ltd.

11.4 At this site, operations are to occur in the following sequence (refer to Appendix 4 for further details on underlined methodology; which are listed in alphabetical order):

1. Carry out tree work operations highlighted yellow in the tree data schedule (Appendix 2). All tree works are to be carried out by a competent and experienced arborist to current British Standards (see Appendix 5.9 for assistance finding a suitable arborist).

2. Erect protective fencing along the position(s) shown by the dashed red line/s on the TPP.

3. For the new access road and car parking spaces - Lay ground protection within the area(s) shown by the diagonal blue lines AND within the area(s) shown by the orange honeycombing on the TPP (at least where RPAs are covered).

4. Hold pre-commencement site meeting with project arboriculturist, building contractor and arboricultural officer. Meeting will include carrying out a 'toolbox talk' to raise awareness about the need for tree protection and to check (and remedy) the recommended tree protective measures. The contractor will be required to read and sign the induction form (see Appendix 7).

5. Commence construction.

6. After all heavy construction works have been completed, remove tree protection and construct new 'no-dig' permeable surfaces (shown by orange honeycombing on the TPP). Potentially, permeable block paving (or similar) could be used.

7. For the access path (near T8 and between T34 & T35), construct a raised path with a permeable surface.

8. Carry out tree planting and any other landscaping works.

© Trevor Heaps Arboricultural Consultancy Ltd.

12.0 Arboricultural supervision

12.1 A suitably-qualified arboriculturalist will provide on-going supervision during construction. The occasions when supervision is required are outlined in Table 2. If the LPA wish to see further supervision, this matter can be dealt with by amending the report and/or by condition.

Table 2: Indicative arboricultural supervision requirements

Supervision details	Required (Y / N)	When	Details	Nature	Sign off
~~Pre-commencement site meeting~~	~~N~~	~~Prior to any site activity~~	~~To ensure contractors are briefed & understand the AMS & TPP. A site supervisor will be appointed to oversee tree protection & the reporting of any damage to trees or deviation from the AMS - to the project arboriculturist / LPA~~	~~Informal and open discussions. Induction form signed by attendees~~	~~Details of meeting to be sent to LPA within 5 days~~
~~Meeting with tree contractors~~	~~N~~	~~Prior to protective measures being installed~~	~~To ensure tree work instructions are clear and understood.~~	~~Informal meeting~~	~~No follow up required~~
Protective measure check	Y	Prior to any site activity	To ensure that protective measures are fit-for-purposed and correctly positioned.	Photos to be provided to consultant	Details of to be sent to LPA within 5 days
On-going supervision	Y	Every 4 weeks during construction	To ensure that the protective measures have not been moved and continue to be fit-for-purpose.	Site meeting with a site monitoring report to be prepared	Details of to be sent to LPA within 5 days
~~Supervision of excavation works near trees~~	~~N~~	~~During construction~~	~~To supervise key stages of works near trees (insert which / when)~~	~~Site meeting with a site monitoring report to be prepared~~	~~Details of to be sent to LPA within 5 days~~
~~Meeting with landscape contractors~~	~~N~~	~~After construction~~	~~To provide advice on tree / shrub selection (if not conditioned)~~	~~Informal meeting~~	~~No follow up required~~

12.2 A site inspection record (see Appendix 8) will be prepared after each visit and will state the condition of tree protection measures and outline any required remedial action (and timescales).

12.3 To demonstrate compliance, and to help the LPA discharge relevant planning conditions, all site monitoring reports will be forwarded to the LPAs arboricultural officer within 5 working days of the visit.

12.3 NOTE: It is the applicant's responsibility to arrange meeting dates with the arboriculturist.

© Trevor Heaps Arboricultural Consultancy Ltd.

13.0 Signature

This report represents a true and factual account of the potential arboricultural impacts, and makes recommendations for appropriate protective measures, at the subject property.

Signed

.....

Trevor Heaps

Chartered Arboriculturist

BSc, MICFor, RC. Arbor. A

Dated

9th December 2024

© Trevor Heaps Arboricultural Consultancy Ltd.

Appendix 1 - Professional résumé

I am Trevor Heaps, Director of Trevor Heaps Arboricultural Consultancy Ltd. I hold a First-Class Honours Degree in Arboriculture; I am a Chartered Arboriculturist and a professional member of the Institute of Chartered Foresters; and I am also a Registered Consultant with the Arboricultural Association.

Professional training

- Arboriculture and Bats: Scoping Surveys for Arborists (BCT & AA) – October 2017
- Tree Science (AA) – June 2016
- OPM (Oak Processionary Moth) Training (FC) – May 2016
- Visual Tree Assessment (Arboricultural Association) - October 2015
- Trees and the Law (Dr Charles Mynors) - June 2015
- Mortgage (Home Buyers) Report Writing (LANTRA / CAS) - February 2015
- Tree Preservation Orders - effective application (LANTRA / CAS) - November 2014
- Professional Tree Inspection 3-day course (LANTRA / AA) - July 2014
- Arboricultural Consultancy Course (AA) - May 2014
- Further down the subsidence trail 1-day course (AA) - April 2013
- Getting to grips with subsidence 1-day course (AA) - November 2012

AA – Arboricultural Association

BCT – Bat Conservation Trust

CAS – Consulting Arborist Society

FC – Forestry Commission

© Trevor Heaps Arboricultural Consultancy Ltd.

Appendix 2 - Tree data schedule

Ref	Name	Age	DBH (mm)	Hgt. (m)	Can. hgt. (m)	Can N (m)	Can E (m)	Can S (m)	Can W (m)	Physio cond.	Struct cond.	Life Exp.	Ret. Cat.	Comments	Rec's (proposed works are highlighted)
T1	Quercus robur (Common Oak)	M	600	12	7	7.5	7.5	7.5	7.5	Normal	Normal	40+	A2	Ivy (heavy covering).	
T2	Quercus robur (Common Oak)	D	600	14	5	6	6	6	6	Dead	Dead	<10	U		
T3	Malus (Apple)	EM	350	6	3	4.5	3	0.5	3	Fair	Fair	10+	C2	Suppressed due to growth from nearby trees. Cavities noted.	
T4	Fraxinus excelsior (Ash)	M	500	14	4	6	6	6	6	Normal	Normal	20+	B2		
T5	Crataegus monogyna (Hawthorn)	EM	250	7	2	2	2	2	2	Fair	Fair	20+	B2	Suppressed due to growth from nearby trees.	
T6	Quercus robur (Common Oak)	M	600	14	7	7.5	7.5	7.5	7.5	Normal	Normal	40+	A2		
T7	Crataegus monogyna (Hawthorn)	EM	250	7	2	2	2	2	2	Fair	Fair	20+	B2	Suppressed due to growth from nearby trees.	
T8	Quercus robur (Common Oak)	M	950	18	8	10	10	10	10	Normal	Normal	40+	A2		
T9	Acer pseudoplatanus (Sycamore)	EM	300	16	6	4	4	4	4	Normal	Normal	40+	B2		
T10	Fraxinus excelsior (Ash)	EM	200	14	5	2	2	2	2	Fair	Fair	20+	C2		Remove (to facilitate development).
T11	Fraxinus excelsior (Ash)	EM	350	10	5	3.5	3.5	1.5	3.5	Fair	Fair	10+	C2		
T12	Fraxinus excelsior (Ash)	EM	350	14	5	4.5	4.5	4.5	4.5	Fair	Fair	10+	B2		
T13	Fraxinus excelsior (Ash)	EM	350	14	5	4.5	4.5	4.5	4.5	Fair	Fair	10+	B2		
T14	Fraxinus excelsior (Ash)	EM	350	14	5	4.5	4.5	4.5	4.5	Fair	Fair	10+	B2		

© Trevor Heaps Arboricultural Consultancy Ltd.

Ref	Name	Age	DBH (mm)	Hgt. (m)	Can. hgt. (m)	Can N (m)	Can E (m)	Can S (m)	Can W (m)	Physio cond.	Struct cond.	Life Exp.	Ret. Cat.	Comments	Rec's (proposed works are highlighted)
T15	Fraxinus excelsior (Ash)	EM	350	14	5	4.5	4.5	4.5	4.5	Fair	Fair	20+	B2		
T16	Fraxinus excelsior (Ash)	EM	300	14	5	4.5	4.5	4.5	4.5	Fair	Fair	20+	B2		
T17	Fraxinus excelsior (Ash)	EM	400	14	5	4.5	4.5	4.5	4.5	Fair	Fair	20+	B2		
T18	Fraxinus excelsior (Ash)	EM	300	14	5	4.5	4.5	4.5	4.5	Fair	Fair	20+	B2		
T19	Fraxinus excelsior (Ash)	EM	300	14	5	4.5	4.5	4.5	4.5	Fair	Fair	20+	B2		
T20	Taxus baccata (Yew)	EM	250	4	1.5	2.5	2.5	2.5	2.5	Normal	Fair	40+	B2	Leaning (not significant).	
T21	Quercus robur (Common Oak)	EM	500,200	16	5	7	7	7	7	Normal	Normal	40+	A2		
T22	Crataegus monogyna (Hawthorn)	EM	250	6	3	2.5	2.5	2.5	2.5	Fair	Fair	20+	B2		Remove (to facilitate development).
T23	Crataegus monogyna (Hawthorn)	EM	250	6	3	2.5	2.5	2.5	2.5	Fair	Fair	20+	B2		Remove (to facilitate development).
T24	Salix fragilis (Crack Willow)	OM	600	6	1	8	8	1.5	1.5	Normal	Poor	<10	C2	Partially collapsed	Remove (due to poor condition).
T25	Fraxinus excelsior (Ash)	EM	500	16	8	5.5	5.5	5.5	5.5	Fair	Fair	20+	B2		
T26	Fraxinus excelsior (Ash)	EM	450	16	8	2.5	6.5	6.5	6.5	Fair	Fair	20+	B2		
T27	Crataegus monogyna (Hawthorn)	EM	250	6	3	2.5	2.5	2.5	2.5	Fair	Fair	20+	B2		
T28	Prunus avium (Wild Cherry)	EM	250	6	3	3	3	3	3	Normal	Normal	40+	B2		Remove (to facilitate development).

© Trevor Heaps Arboricultural Consultancy Ltd.

Ref	Name	Age	DBH (mm)	Hgt. (m)	Can. hgt. (m)	Can N (m)	Can E (m)	Can S (m)	Can W (m)	Physio cond.	Struct cond.	Life Exp.	Ret. Cat.	Comments	Rec's (proposed works are highlighted)
T29	Fraxinus excelsior (Ash)	M	600	9	5	6	6	6	6	Fair	Fair	20+	B2		
T30	Prunus lusitanica (Portugal Laurel)	M	250	8	5	4.5	4.5	4.5	4.5	Fair	Fair	20+	B2		
T31	Quercus ilex (Holm Oak)	M	600	14	3	6	6	6	6	Normal	Normal	40+	A2		
T32	Fagus sylvatica 'Purpurea' (Copper Beech)	M	750	16	5	7.5	7.5	7.5	7.5	Normal	Normal	40+	A2		
T33	Fraxinus excelsior (Ash)	M	400	18	5	8.5	8.5	8.5	8.5	Fair	Fair	20+	B2		
T34	Fraxinus excelsior (Ash)	M	650	18	5	8.5	8.5	8.5	8.5	Fair	Fair	20+	B2		
T35	Quercus robur (Common Oak)	EM	440	10	5	6	6	6	6	Normal	Normal	40+	A2		
T36	Fraxinus excelsior (Ash)	SM	300	12	5	4.5	4.5	4.5	4.5	Normal	Normal	20+	B2	Leaning (not significant).	Remove (to facilitate development).
T37	Fraxinus excelsior (Ash)	EM	400	12	5	6.5	6.5	6.5	6.5	Normal	Normal	20+	B2		Remove (to facilitate development).
T38	Fraxinus excelsior (Ash)	EM	400	12	5	6.5	6.5	6.5	6.5	Normal	Normal	20+	B2		Remove (to facilitate development).
T39	Fraxinus excelsior (Ash)	M	250	16	5	6.5	6.5	6.5	6.5	Normal	Normal	20+	B2	Multi-stemmed.	Remove (to facilitate development).
T40	Fraxinus excelsior (Ash)	EM	500	12	5	6.5	6.5	6.5	6.5	Normal	Normal	20+	B2		
T41	Fraxinus excelsior (Ash)	EM	500	12	5	6.5	6.5	6.5	6.5	Normal	Normal	20+	B2		
T42	Fraxinus excelsior (Ash)	M	700	12	6	9	9	12	9	Fair	Fair	20+	B2		

© Trevor Heaps Arboricultural Consultancy Ltd.

Ref	Name	Age	DBH (mm)	Hgt. (m)	Can. hgt. (m)	Can N (m)	Can E (m)	Can S (m)	Can W (m)	Physio cond.	Struct cond.	Life Exp.	Ret. Cat.	Comments	Rec's (proposed works are highlighted)
T43	Fraxinus excelsior (Ash)	M	550	12	6	6	6	6	6	Fair	Fair	20+	B2	Growing on third-party land.	
T44	Eucalyptus sp. (Gum Tree)	M	900	18	8	8	8	8	8	Normal	Normal	40+	A2	Growing on third-party land.	
T45	Prunus avium (Wild Cherry)	SM	200	6	2	2	2	2	2	Normal	Normal	40+	B2		
T46	Prunus laurocerasus (Cherry Laurel)	SM	200	6	2	2	2	2	2	Fair	Normal	40+	B2	Sparse.	

© Trevor Heaps Arboricultural Consultancy Ltd.

Appendix 3 - Tree data schedule explanatory notes

This section explains the terms used in the **Tree data schedule** (Appendix 2).

Ref: Each item of vegetation has its own unique number, prefixed by a letter such that:

T1=Tree **S2**=Shrub or stump **G3**=Group **H4**=Hedge **W5**=Woodland

Species: Latin (and common names in brackets) are given.

Age:

- **Y - Young -** Usually less than 10 years' old
- **SM - Semi-mature -** Significant future growth to be expected, both in height and crown spread (typically below 30% of life expectancy)
- **EM - Early-mature -** Full height almost attained. Significant growth may be expected in terms of crown spread (typically 30-60% of life expectancy)
- **M - Mature -** Full height attained. Crown spread will increase but growth increments will be slight (typically 60% or more of life expectancy)
- **V - Veteran -** A level of maturity whereby significant management may be required to keep the tree in a safe condition
- **OM – Over-mature -** As for veteran except management is not considered worthwhile

DBH (mm): Stem diameter, measured in mm, taken at 1.5m above ground level where possible.

Hgt. (m): Height: Measured from ground level to the top of the crown in metres.

Can Hgt. (m): Crown height: Measured from ground level to the lowest tips of the main crown begins in metres. Where the crown is unbalanced it is measured on the side deemed to be most relevant. This is usually the side facing the area of anticipated development.

Can N, S, E, W: - Canopy extents
Approximate radial crown spread measured to the four cardinal points (for individual trees only)

Physio cond.: Indicates the physiological condition of the tree as one of the following categories:

- **Normal -** Healthy tree with no symptoms of significant disease
- **Fair -** Tree with early signs of disease, small defects, decreased life expectancy, or evidence of less-than-average vigour for the species
- **Poor -** Significant disease present, limited life expectancy, or with very low vigour for the species and evidence of physiological stress
- **Very poor -** Tree is in advanced stages of physiological failure and is dying
- **Dead -** No leaves or signs of life

© Trevor Heaps Arboricultural Consultancy Ltd.

Struct cond.: Indicates the structural condition of the tree as one of the following categories:

- **Normal** - No significant structural defects noted
- **Fair** - Some structural defects noted but remedial action not required at present
- **Poor** - Significant defects noted resulting in a tree that requires regular monitoring or remedial action
- **Very poor** - Major defects noted that compromise the safety of the tree. Remedial works or tree removal is likely to be required.
- **Dead** - No leaves or signs of life

Life Exp.: The estimated number of years before the tree may require removal (<10), (10 – 20), (20 – 40), or (40+).

Ret. Cat.: - Retention category: BS5837:2012 Category where:

- **U = Trees unsuitable for retention**. Trees in such a condition that cannot realistically be retained as living trees in the context of the current land use for longer than 10 years. These trees are shown on the tree plans with red centres.

- **A = Trees of high quality**. Trees of high quality with an estimated remaining life expectancy of at least 40 years. These trees are shown on the tree plans with green centres.

- **B = Trees of moderate quality**. Trees of moderate quality with an estimated remaining life expectancy of at least 20 years. These trees are shown on the tree plans with blue centres.

- **C = Trees of low quality.** Trees of low quality with an estimated remaining life expectancy of at least 10 years, or young trees with a stem diameter below 150mm. These trees are shown on the tree plans with grey centres.

Trees of notable quality are graded as Category A or Category B. These trees are sometimes divided further into sub-categories:

- Sub-category 1 is allocated where it has been assessed that the tree has mainly arboricultural qualities.
- Sub-category 2 is allocated where it is assessed that the tree has mainly landscape qualities.
- Subcategory 3 is allocated where it is assessed that the tree has mainly cultural qualities, including conservation.

Trees may be allocated more than one sub-category. All sub-categories carry equal weight, with for example an A3 tree being of the same importance and priority as an A1 tree.

Comments: Tree form and pruning history are also recorded along with an account of any significant defects.

Rec's - Recommendations: Usually based on any defects observed and intended to ensure that the tree is in an acceptable condition.

© Trevor Heaps Arboricultural Consultancy Ltd.

Appendix 4 – Specifications for tree protective measures

Ground Protection

The following *italicised* text is based on an extract from British Standard 5837:2012 - Trees in relation to design, demolition and construction– Recommendations.

Temporary ground protection should be able to support any traffic entering or using the site without being distorted or causing compaction of underlying soil and might comprise one of the following:

a) for pedestrian-movements only, a single thickness of scaffold boards placed either on top of a driven scaffold frame, to form a suspended walkway, or on top of a compression-resistant layer (e.g. 100 mm depth of woodchip), laid onto a geotextile membrane;

b) for pedestrian-operated plant up to a gross weight of 2 t, proprietary, inter-linked ground protection boards placed on top of a compression-resistant layer (e.g. 150 mm depth of woodchip), laid onto a geotextile membrane;

c) for wheeled or tracked construction traffic exceeding 2 t gross weight, an alternative system (e.g. proprietary systems or pre-cast reinforced concrete slabs) to an engineering specification designed in conjunction with arboricultural advice, to accommodate the likely loading to which it will be subjected.

The location of the temporary ground protection is shown on the tree protection plan and detailed within the arboricultural method statement.

In all cases, the objective will be to avoid the unnecessary compaction of soil (which can arise from a single passage of a heavy vehicle, especially in wet conditions) so that tree root functions remain unimpaired.

All ground protection is to be maintained in good order, so it is fit for purpose throughout development. The ground protection will not be altered in any way, or prematurely removed without prior consent of the project arboriculturist or the LPA arboricultural officer.

© Trevor Heaps Arboricultural Consultancy Ltd.

Figure 1: An example of ground protection on work areas within a RPA (BS 5837:2005).

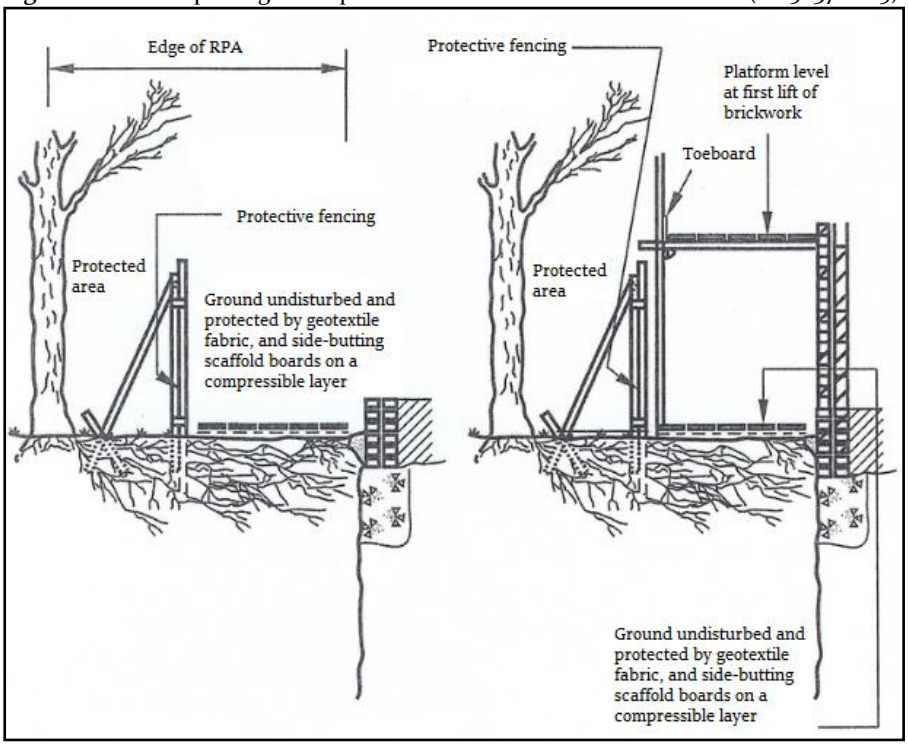

Photo 2. An example of heavy-duty ground protection.

© Trevor Heaps Arboricultural Consultancy Ltd.

No-dig surface installations

The no-dig construction principles are outlined below and the areas to which they apply are shown on the TPP (shaded with orange honeycomb). A useful example diagram (by Protectoweb) is shown below (Figure 4).

Figure 4: A good example of the principles of a no-dig surface.

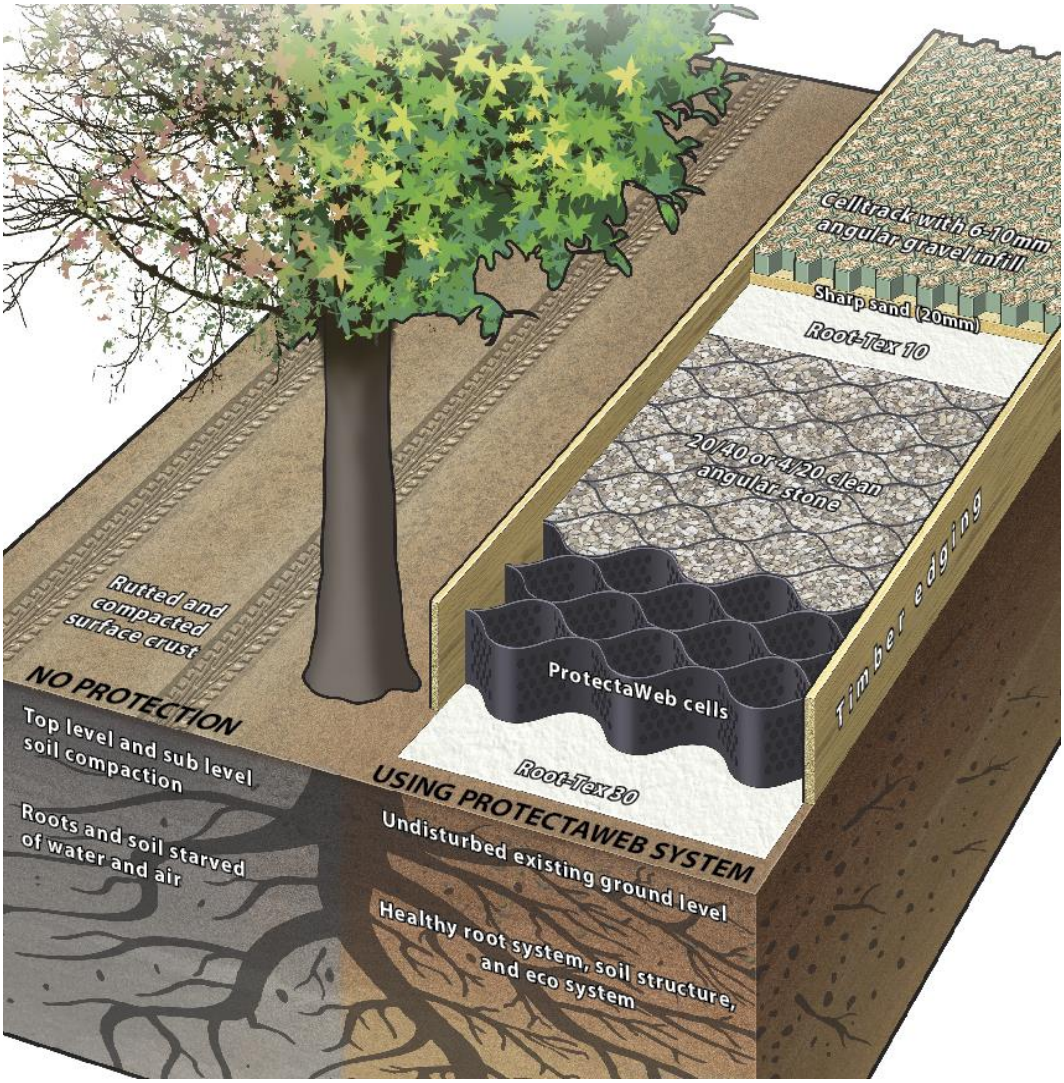

The surface vegetation will be treated with a suitable systemic herbicide and then removed by hand.

Any localised depressions will be filled in with sharp sand (not builders' sand, which has a high salt content) to create an even surface profile. The area will not be 'rolled' or consolidated in any way.

Timber edging boards (or similar) will be installed along the perimeter of the no-dig area. The fixing posts and pegs for the edging boards will be located carefully to avoid damaging to tree roots.

© Trevor Heaps Arboricultural Consultancy Ltd.

A layer of geotextile fabric will be laid across the 'no-dig' area, overlapping adjacent rolls by a minimum of 150mm (it may be necessary to lightly pin the geotextile in place until the overlying layers are installed).

The 3D Cellular Confinement System (3DCCS) will be opened, laid and pinned in place between the edging boards (it may be necessary to cut it to size using a sharp knife, or it can be left uncut and folded up against the edgings if preferred).

The system is available in various depths for varying loadings, but each site should have a specific design detailed to ensure the correct depth of product is used. Unless the existing ground conditions are very soft then the following can apply:

- **50mm deep for Pedestrians and Cycleways, non-vehicular traffic**
- **75mm deep for Pedestrians, Cycleways and vehicles (up to 1.5 tons)**
- **100mm deep for Cars, 4 x Wheel Drives, Vans etc. (up to 6 tons)**
- **150mm deep for Fire Trucks, Removal Vehicles and Dust Carts (up to 20 tons)**
- **200mm deep for construction vehicles, cranes etc. (40 tons and above)**

The 3DCCS will be pinned in place using steel fixing pins to keep it open and fully expanded position whilst the cells are being filled and to stop the structure from being pushed up by migrating aggregate during the filling process. The fixing pins will be driven in so that they are just touching the top of the cells but do not compress the fabric.

The 3DCCS will be filled with clean, open-graded angular aggregate, normally in the particle size range of 5mm - 45mm, working toward the tree(s) from the furthest point away and using the filled sections as a platform.

A light vibratory compaction plate (whacker) will be used to settle the stone into the cells and the permeable surface will then be installed on top of the filled, cellular confinement system.
If the proportion of RPA covered by a no-dig surface is greater than 20%, the wearing surface must be permeable.

© Trevor Heaps Arboricultural Consultancy Ltd.

Photo 3: Three stages of a 'no-dig' driveway under construction.

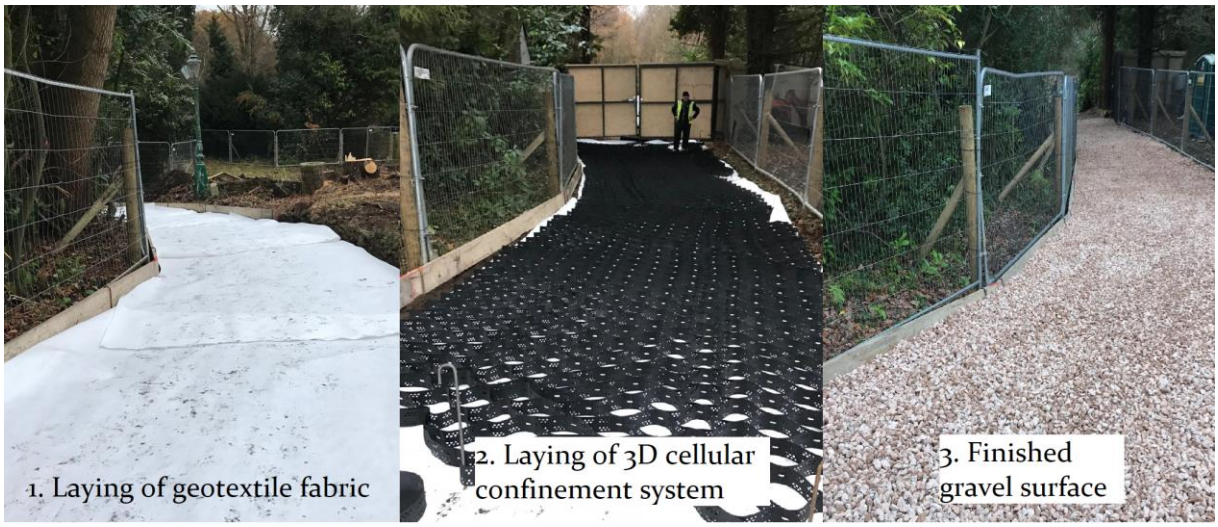

© Trevor Heaps Arboricultural Consultancy Ltd.

No-dig tracks

The 'no-dig' construction principles are outlined below and the areas to which they apply are shown on the TPP (shaded with orange honeycomb). A useful example is shown below in photo 1.

Photo 1

The surface vegetation will be treated with a suitable systemic herbicide and then removed by hand.

Any localised depressions will be filled in with sharp sand (not builders' sand, which has a high salt content) to create an even surface profile. The area will not be 'rolled' or consolidated in any way.

Timber edging boards (or similar) will be installed along the perimeter of the 'no-dig' area. The fixing posts and pegs for the edging boards will be located carefully to avoid damaging to tree roots.

© Trevor Heaps Arboricultural Consultancy Ltd.

A layer of geotextile fabric will be laid across the 'no-dig' area, overlapping adjacent rolls by a minimum of 150mm (it may be necessary to lightly pin the geotextile in place until the overlying layers are installed).

The track will then be created by back-filling with scalpings / Type one MOT.

A light vibratory compaction plate (whacker) will be used to settle the stones and create an even surface. If necessary, the sub-base can then be covered with a wearing surface

If the proportion of RPA covered by a 'no-dig' surface is greater than 20%, the wearing surface must be permeable.

© Trevor Heaps Arboricultural Consultancy Ltd.

Permeable Block Paving

Working off suitable ground protection, existing hard surfaces shall be removed by hand / or existing vegetation shall be treated with a suitable systemic herbicide. When the vegetation has died, the turf layer (usually about 5cm deep) will be removed (using hand tools).

Working with the new bare surface, any localised depressions will be filled in with sharp sand (not builders' sand, which has a high salt content) to create an even surface profile. The area will not be 'rolled' or consolidated in any way.

Once the even surface profile has been formed, a layer of geotextile fabric will be laid across the 'no-dig' area and the block paving will be laid - set on a sand base.

Conventional kerb edges (set in concrete-filled trenches) are likely to result in damage to roots and should be avoided. Edge retention in RPAs must be designed to avoid any significant excavation into existing soil levels (BS 5837, 7.4.3) and there are several approaches that are fit for this purpose: Railway sleepers pinned in place or wooden boards are two options, depending on the expected loading of the surfacing. A permeable soil fill can then be used to batter the grade back down to the existing soil level.

Photo: An example of a finished permeable block paved driveway

© Trevor Heaps Arboricultural Consultancy Ltd.

Protective fencing

The following is based on an extract from British Standard 5837:2012 - Trees in relation to design, demolition and construction– Recommendations.

The framework support (shown in Figure 2 and photo 1) is the usual method of support for 'Heras' fencing. Some variations are possible if site conditions are appropriate; i.e. support by wooden posts (75mm x 75mm x 2.75m) dug or concreted into the ground (dry mix concrete contained within a plastic bag), or if there is no pressure for access, a lighter form of netting on stakes.

Figure 2: Default specification for protective barrier (BS 5837:2012)

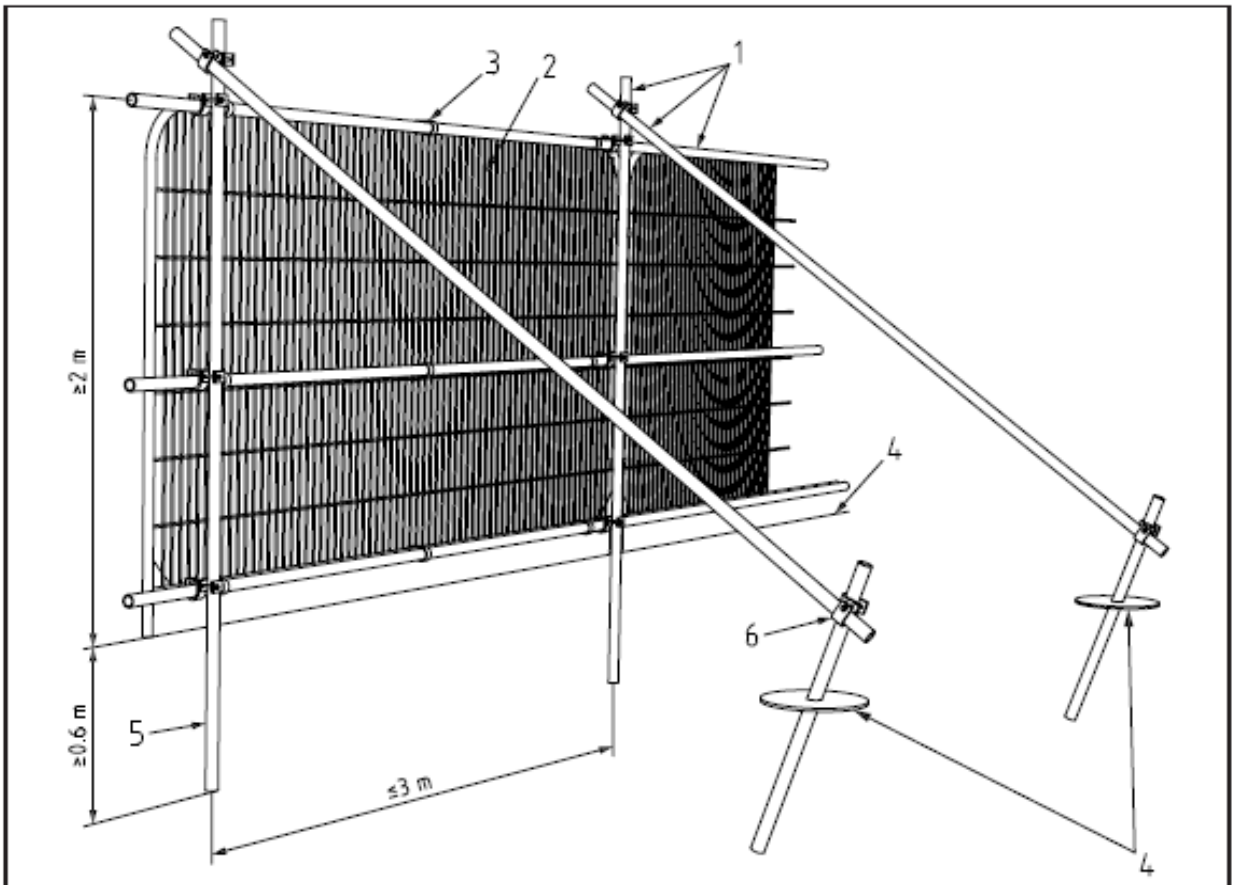

Key

1 Standard scaffold poles
2 Heavy gauge 2 m tall galvanized tube and welded mesh infill panels
3 Panels secured to uprights and cross-members with wire ties
4 Ground level
5 Uprights driven into the ground until secure (minimum depth 0.6 m)
6 Standard scaffold clamps

© Trevor Heaps Arboricultural Consultancy Ltd.

Photo 1: A worked example of the default specification for protective barrier (BS 837:2012)

Durable, all-weather signs are to be attached to the fencing (an example sign is provided below). These shall be printed, laminated and attached at regular intervals along the fencing.

Once erected, the protective fencing is to be regarded as sacrosanct and there is to be no access into the area protected by it - the construction exclusion zone (CEZ).

The protective fencing is to be maintained in good order, so it is fit for purpose throughout the construction process. The fencing will not be altered in any way, or prematurely removed without prior consent of the project arboriculturist and/or (if necessary) the LPA arboricultural officer.

Where specified in the AMS, the tree(s) stem/s shall be boxed off with wooden ply boards or wrapped in hessian and chestnut pale fencing / trunk protection (see example below). This will help avoid any direct damage to tree stems from passing machinery (see photo 2).

© Trevor Heaps Arboricultural Consultancy Ltd.

Photo 2: Trees protected by hessian & chestnut pale fencing / limbs protected by wooden boxing

Photo 2. https://greengridsystems.com/products/trunk-protecta

© Trevor Heaps Arboricultural Consultancy Ltd.

TREE PROTECTION FENCING

KEEP OUT

This fencing must not be removed

or altered in any way without prior consultation with the project arboriculturist!

Please report any damage to trees and/or fencing to the site manager or the project arboriculturist

Trevor Heaps

07957 763 53

© Trevor Heaps Arboricultural Consultancy Ltd.

Soft landscaping within or close to the Root Protection Areas (RPAs) of retained trees

The following precautions are necessary to avoid damage to trees (where activities are to take place within their RPAs):

- Ground levels will not be changed;
- Soil must be of good quality and free of contaminants and other foreign objects potentially injurious to tree roots. The topsoil must satisfy the requirements of BS3882:200;
- No heavy machinery will be operated within the RPAs of retained trees during the installation of soft landscaping;
- Unwanted vegetation shall be removed manually or by using systemic herbicide that will not damage tree roots;
- No fuels or chemicals shall be used or stored within these areas; and
- No irrigation or drainage pipes shall be installed within the RPAs

Underground Services

It is assumed that the existing service runs will be exploited where possible, but if new works are required it is important that they comply with the National Joint Utilities Group (NJUG) 'Guidelines for the planning, installation, and maintenance of utility services in proximity to trees' and BS 5837:2012.

The excavation of open trenches by machine will be unacceptable within the protective zone of any of the retained trees. Wherever possible, services should be routed outside of any retained trees RPA. When this is not possible apparatus should be routed together in a common duct and any inspection chambers sited outside the RPA.

Acceptable techniques for the laying of services *in order of preference are*:

Trenchless- by use of thrust boring or similar techniques (see table 1). The pit excavations for starting and receiving the machinery should be located outside of the root protection area. To avoid root damage, the mole should run at a depth of at least 600mm. Use of external lubricants on the mole other than water (e.g. oil or bentonite) should be avoided.

© Trevor Heaps Arboricultural Consultancy Ltd.

If trenchless insertion is not feasible the alternatives are detailed below *in order of preference*.

Broken trench- by using hand dug trench sections together with trenchless techniques. It should be limited to practical access and installation around or below the roots. The trench must be dug by hand (see following comments re continuous trenching) and only be long enough to allow access for linking to the next section. The open sections should be kept as short as possible.

Continuous trench- the trench is excavated by hand and retains as many roots as possible. The surface layer is removed carefully and hand digging of the trench takes place. No roots over 2.5cm diameter or clumps of smaller roots (including fibrous) should be severed. The bark surrounding the roots must be maintained. Cutting of roots over 2.5cm diameter should not be attempted without the advice of a qualified Arboriculturalist.

If roots have to be cut, a sharp tool (defined as spade, narrow spade, fork, breaker bar, secateurs, handsaw, post hole shoveler, hand trowel) should be used.

Figure 1

Trenchless Solutions For Installation Of Underground Services					
Method	**Accuracy (MM)**	**Bore (A) diameter (MM)**	**Maximum subterranean length (M)**	**Applications**	**Not suitable for**
Microtunnelling	<20	100 to 300	40	Gravity-fall pipes, deep apparatus, watercourse/ roadway under crossings	Low-cost projects due to relative expense
Surface-launched directional drilling	≈100	25 to 1200	150	Pressure popes, cables including fibre optic	Gravity fall pipes, e.g. drains and sewers (B)
Pipe ramming	≈150	150 to 2000	70	Any large-bore pipes and ducts	Rocky and other heavily obstructed soils
Impact moling (C)	≈50 (D)	30 to 180 (E)	40	Gas, water and cable connections, e.g. from street to property	Any application that requires accuracy over distances in excess of 5m.

(A) Dependent upon strata encountered.

(B) Pit-launched directional drilling can be used for gravity fall pipes up to 20m in subterranean length.

(C) Impact moling (also known as thrust-bore) generally requires soft, cohesive soils.

(D) Substantial inverse relationship between accuracy and distance.

(E) Figures given relate to single pass: up to 300mm bore achievable with multiple passes.

© Trevor Heaps Arboricultural Consultancy Ltd.

Backfilling after above excavations

Reinstatement of street works must comply with the code of practice New Roads and Streetworks Act 1991 (Specification for the reinstatement of openings in highways), but where tree roots are involved backfilling should be carefully carried out to avoid direct damage to retained roots and excessive compaction of the soil around them.

The backfill should incorporate an inert granular material mixed with top soil or sharp sand (not builders sand) around the retained roots. This will allow a measure of compaction for resurfacing whilst creating an aerated zone around the roots.

Roots and in particular fine roots, are vulnerable to desiccation on exposure to air. The roots are at greatest risk when there are rapid fluctuations in the air temperature around them (especially winter diurnal temperatures). It is vitally important that the roots are covered with sacking whilst the trench is open. The sacking should be removed once the trench is backfilled.

© Trevor Heaps Arboricultural Consultancy Ltd.

Appendix 5 – General precautions and further information

Figure 4: Common problems for trees on development sites
(http://www.leics.gov.uk/highway_req_development_part7_appendix_f)

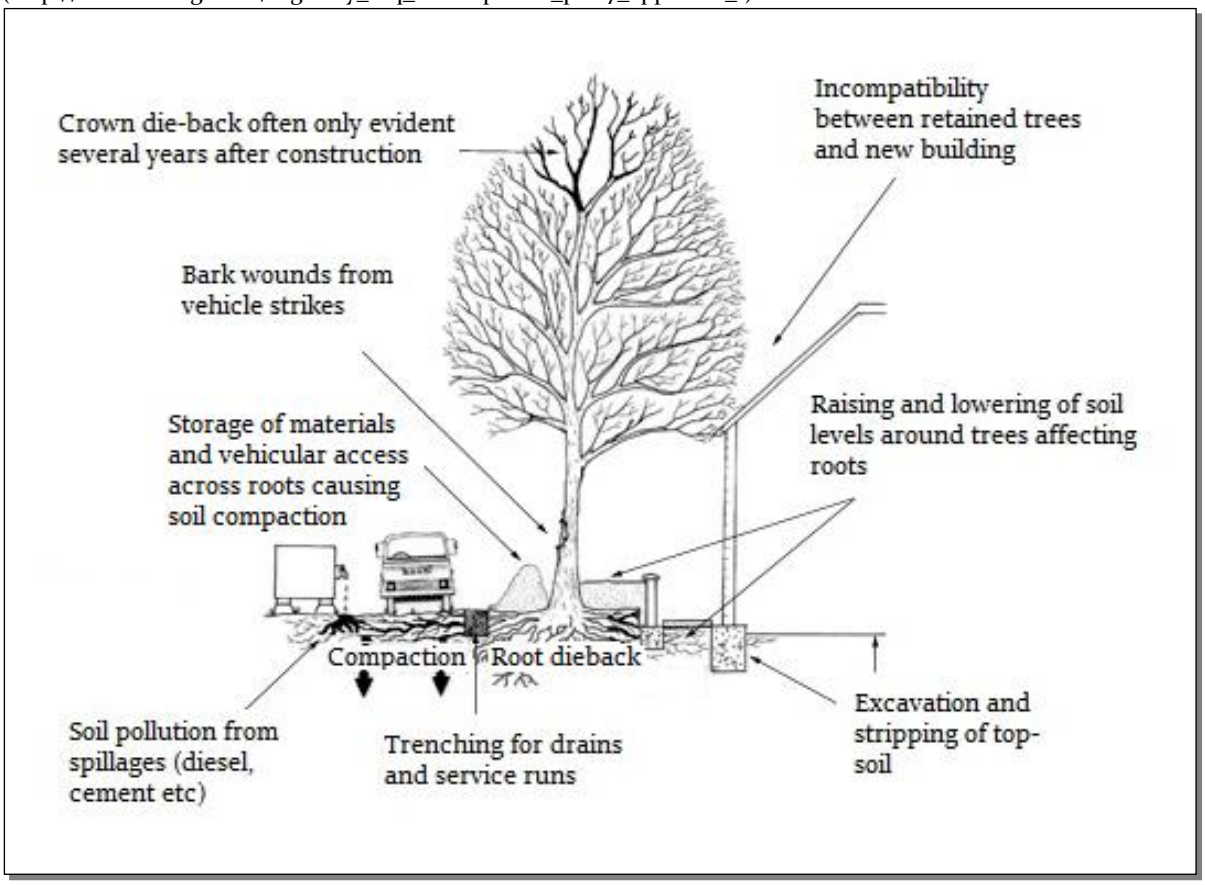

5.1 Services and drainage: Surface run-off water shall be sent to existing drains and/or soakaways located outside the RPAs of retained tree(s). If trenching is required within the RPA of retained trees to provide routes for services, this work shall be undertaken using mole boring and / or hand digging (under arboricultural supervision).

5.2 Storage of materials: No materials or spoil are to be stored within areas protected by protective fencing and/or ground protection. The same applies for existing hard surfaces that are being used as ground protection.

5.3 Spillages: If any cement residues fall within root protection areas, it shall be swept up, bagged and removed from site – it shall <u>not</u> be washed away with water.

5.4 Demolition: Where any existing structures are to be demolished, they will be done so inwardly (away from root protection areas / retained soil).

© Trevor Heaps Arboricultural Consultancy Ltd.

5.5 Levels: There is to be no alteration of ground levels within the area protected by protective fencing and/or ground protection, unless previously specified and agreed upon. The same applies for existing hard surfaces that are being used as ground protection.

5.6 Fires: No fires are to be lit within 20 metres of the stems of retained trees.

5.7 Above ground damage to trees: Care must be taken in planning the location and operation of machinery to avoid above ground damage to trees. BS5837 (2012) Section 6.2.4.1 states '*Planning of site operations should take sufficient account of wide loads, tall loads and plant with booms, jibs and counterweights (including drilling rigs) in order that they can operate without contacting retained trees. Such contact can result in serious damage to trees and might make their safe retention impossible. Consequently, any transit or traverse of plant in proximity to trees should be conducted under the supervision of a banksman, to ensure that adequate clearance of trees is always maintained. Access facilitation pruning should be undertaken where necessary to maintain this clearance.*

5.8 Remedial works and soil improvement: Exposed soils are easily compacted resulting in loss of water and gaseous exchange; this can lead to root death (and subsequently tree death).

5.8.1 To relieve ground compaction, which may have resulted from the use of vehicles or by the storage of materials, the soils should be broken up to allow air to penetrate and for the soil structure to be restored. There are various methods to achieve this, such as: auguring the soil by hand / fork or pneumatic excavation (e.g. with an air spade); both should be combined with soil structure improvements (see 5.8.2).

5.8.2 The soil structure can be improved by incorporating a compost or mulch within the topsoil, of 75-100mm in depth. This can be spread over the surface and gently forked into the soil. If bark chip is used as mulch, NPK fertilizer should be added to counteract the nitrogen depletion of the soil. There is also the option of adding mycorrhizal fungal which may also improve root function.

5.9 Choosing an arborist: When appointing a tree works contractor, please only use properly qualified and experienced companies who comply with current British Standards (3998) and always check that they carry Public Liability Insurance within a minimum of £2,000,000 cover, and the relevant Employers Liability Insurance. A list of contractors approved by the Arboricultural Association can be found at www.trees.org.uk or by calling 01242 522 152.

© Trevor Heaps Arboricultural Consultancy Ltd.

Appendix 6 - Procedure to follow in case of damage to retained trees

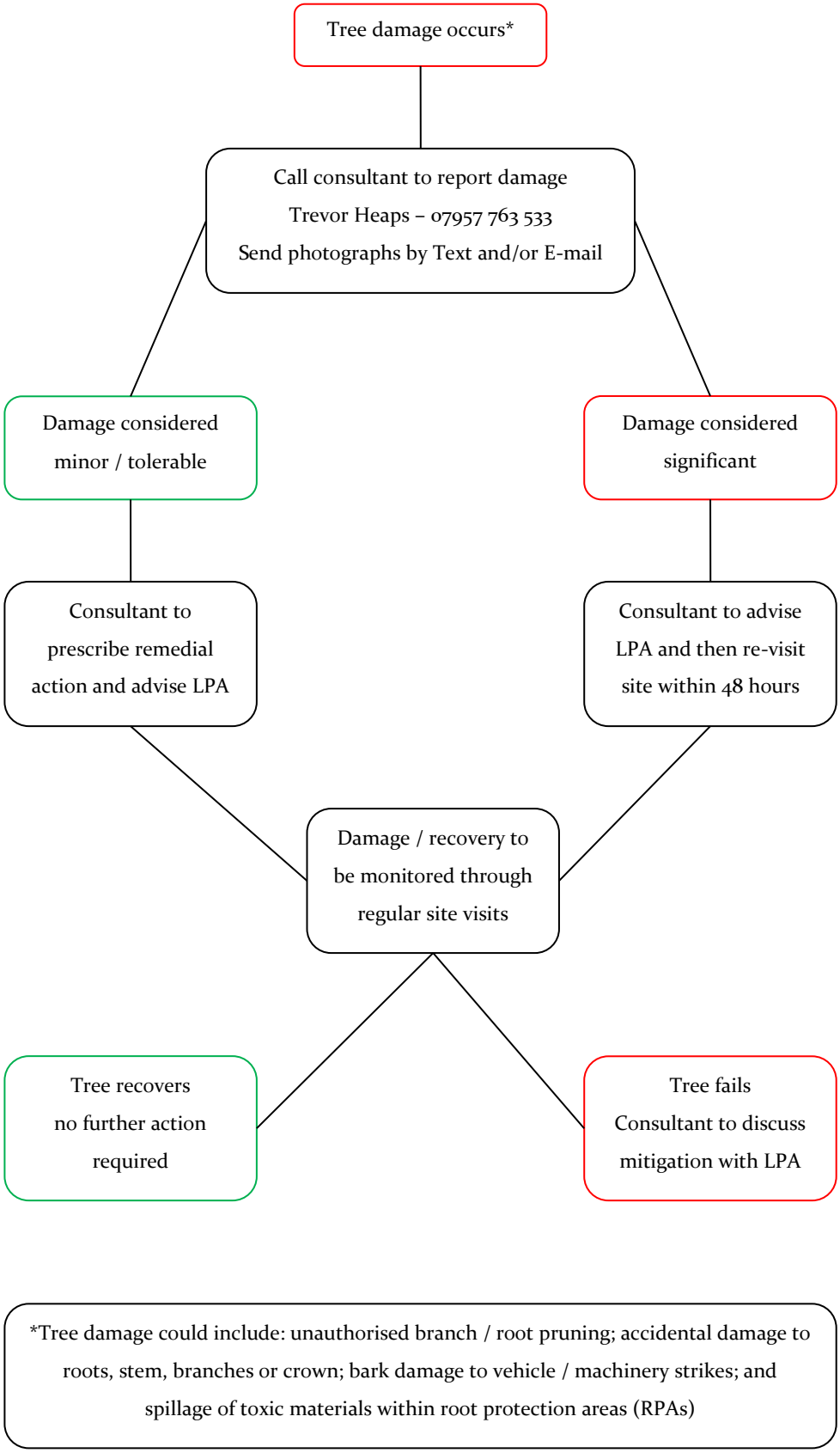

*Tree damage could include: unauthorised branch / root pruning; accidental damage to roots, stem, branches or crown; bark damage to vehicle / machinery strikes; and spillage of toxic materials within root protection areas (RPAs)

© Trevor Heaps Arboricultural Consultancy Ltd.

Appendix 7 - Induction form for all site personnel

Site name: .....

App. No.: .....

Appointed Site Supervisor: .....

- I have had explained to me by the Site Manager the key implications of the Arboricultural Method Statement relating to the development at the above site.
- I am aware that trees have shallow roots and any excavation works beneath the canopy could cause irreparable damage.
- I am aware that the tree protective fencing / ground protection must remain in its original position and must not be moved without the approval of the appointed Arboricultural Consultant.
- I understand that certain operations must be supervised by the appointed Arboricultural Consultant and that these must not start until the consultant is present and has given approval.
- I confirm that I will bring any concerns about potential damage to trees to the attention of the Site Manager.
- I am aware that I must not cause damage to any of the retained trees on or adjacent to the site. Damage may be caused by direct means (i.e. physical damage caused to roots or the trunk/branches of the tree) or by indirect means (e.g. by fire or toxic materials entering the rooting environment of the tree).

Print Name: .....

Sign Name: .....

Date: .....

© Trevor Heaps Arboricultural Consultancy Ltd.

Appendix 8 - Site inspection record

Date: Time: ..... Site:	Planning reference: .....

Those present in addition to project arboriculturist:

Client / Agent: .....

Project / Site manager: .....

LPA arboricultural officer: .....

Other (specify): .....

	Yes	No	Notes
Tree protection measures located in accordance with TPP?			
Any disturbance within construction exclusion zone?			
Any materials stored within construction exclusion zone?			
Any evidence of damage to tree roots, stems or canopies?			
Any works programmed before next planned site visit that may affect retained trees? (if yes, provide details below)			

Additional site visit required to ensure compliance with required action? (Y / N)
Proposed visit date:

Signed: Date:

© Trevor Heaps Arboricultural Consultancy Ltd.

Appendix 10: Tree Protection Plan

Plan Legend

- Tree/s to be retained
- Tree/s to be removed
- Centre colours
- Category A Tree
- Category B Tree
- Category C Tree
- Category U Tree
- Root Protection Area (RPA) If amended, the original is a dotted blue circle
- Protective fencing
- CEZ — Construction & storage exclusion zone
- Ground protection or existing hard surface to remain
- Ground protection during construction. 'No-dig', permeable, load-spreading surfaces afterwards

Scale: 1:400 @ A3 (0 – 8m – 16m)

Site Address: Land at Bartons Road, Havant, PO9 5NB

Client: Anavo Developments Limited
Drawing No: TH/A3/3923/TPP

Job Ref: TH 3923 | Date: 09/12/2024

Trevor Heaps
Arboricultural Consultancy Ltd

07957 763 533
trevor@trevorheaps.co.uk
www.trevorheaps.co.uk

End of Report