Range of cylindrical cased axial fans fitted with aluminium impellers and manufactured from high grade rolled galvanised steel and protected against corrosion by cataforesis primer and black polyester paint finish.
Fited with 2 contra rotating complementary impellers manufactured from die-cast aluminium.
All models are supplied with pre-wired wiring junction box located on the outside of the fan casing for easy wiring access.
Available with single or three phase 4 poles motors.

Motors
All the motors are IP65, Class F insulation (1), equipped with thermal protection.
Single phase motors are variable voltage (Excepted TCBBX2/4-630).
Three phase motors suitable for inverter control.
Electrical supplies:
- Single phase 230V-50Hz (Capacitor located inside the wiring terminal box)
- Three phase 230/400V-50Hz.

(1) Working temperatures from -40ºC up to 70ºC.

Contra rotating: High pressure
Contra rotating system with two complementary impellers allowing the duplication of the pressure with the same air volume.

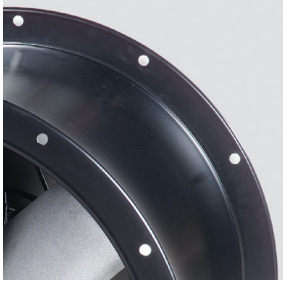

Corrosion resistance
Rolled steel casings and motor support protected by cataforesis primer and black polyester paint finish. Stainless steel screws.

Terminal box
Wiring terminal box with cable gland PG-11.

Impeller dynamically balanced
Impellers are dynamically balanced, according to ISO 1940 standard, giving vibration free operation.

TECHNICAL CHARACTERISTICS

Before installation check that the product electrical characteristics listed on the data plate label (voltage, power, frequency, etc.) match those of the intended electrical supply.

Model	Speed (rpm)	Ø Valve (mm)	Maximum absorbed power (W)	Maximum absorbed current (A)		Sound pressure level* (dB(A))	Maximum air volume (m^3/h)	Weight (kg)	Speed controller RMB/T	Variable frequency inverter			
										VFTM		VFKB	
				to 230 V	to 400 V					1/230V**	3/400V	1/230V**	3/400V
SINGLE PHASE													
TCBBx2/4-450	1420	450	1316	5,7	–	74	7.430	42	RMB-8	–	–	–	–
TCBBx2/4-500	1425	500	1957	9,0	–	76	9.950	50	RMB-10	–	–	–	–
TCBBx2/4-560	1425	560	3185	14,2	–	78	14.150	66	–	–	–	–	–
TCBBx2/4-630	1400	630	3671	16,3	–	79	16.560	80	–	–	–	–	–
THREE PHASE													
TCBTx2/4-450	1430	450	1309	5,2	3	74	7.250	42	RMT-5	VFTM MONO 1,1	VFTM TRI 1,1	VFKB 27	VFKB 45
TCBTx2/4-500	1390	500	1700	5,8	3,4	76	9.800	50	RMT-5	VFTM MONO 1,1	VFTM TRI 1,5	VFKB 27	VFKB 45
TCBTx2/4-560	1390	560	3173	10,0	5,8	78	15.170	66	–	VFTM MONO 2,2	VFTM TRI 3	–	VFKB 48
TCBTx2/4-630	1445	630	4014	-	7,4	79	17.810	80	–	–	VFTM TRI 4	–	VFKB 48

* Sound pressure level, measured in free field condition at a distance equivalent of three times the diameter of the impeller or a minimum of 1.5 meters wichever is the greater.
** Only for fans fitted with three phase motors 230/400V.

ACOUSTIC CHARACTERISTICS

The sound levels –NPS- shown in the technical characteristic chart, correspond to the value of sound pressure dB(A), measured in free field conditions at a distance equivalent to three times the diameter of the impeller with a minimum of 1.5 meters.
The following table shows the sound power level spectrums in dB(A) measured with the fan ducted, at both inlet and discharge sides.

Model	Air volume m^3/h	63	125	250	500	1000	2000	4000	8000	Global
450 Inlet	6.600	46	73	85	82	85	79	72	64	90
	5.850	46	73	84	81	83	79	71	64	88
	4.300	58	70	80	80	83	79	71	64	87
450 Outlet	6.600	63	75	86	85	87	82	74	67	92
	5.850	53	73	85	84	87	81	74	67	91
	4.300	58	70	82	83	86	82	74	67	90
500 Inlet	9.000	48	78	87	85	87	81	74	67	92
	7.500	52	76	85	85	85	80	73	65	90
	6.000	60	73	83	82	85	80	73	66	89
500 Outlet	9.000	65	76	87	88	90	84	77	70	94
	7.500	62	75	86	87	88	83	76	69	92
	6.000	59	72	86	85	88	83	76	69	92

Model	Air volume m^3/h	63	125	250	500	1000	2000	4000	8000	Global
560 Inlet	13.720	50	85	87	88	91	85	78	73	95
	10.800	57	79	83	86	89	84	78	72	93
	9.000	63	79	81	86	89	84	78	72	92
560 Outlet	13.720	74	86	85	91	94	88	81	75	97
	10.800	70	82	84	88	92	87	81	74	95
	9.000	74	81	85	89	92	87	81	74	95
630 Inlet	17.500	51	85	91	89	93	87	80	74	97
	15.600	55	85	85	88	91	86	80	73	95
	12.000	64	80	84	88	90	86	80	73	94
630 Outlet	17.500	73	87	88	93	95	89	83	77	99
	15.600	71	87	86	91	94	89	83	76	98
	12.000	67	84	86	90	94	89	84	76	97

DIMENSIONS (mm)

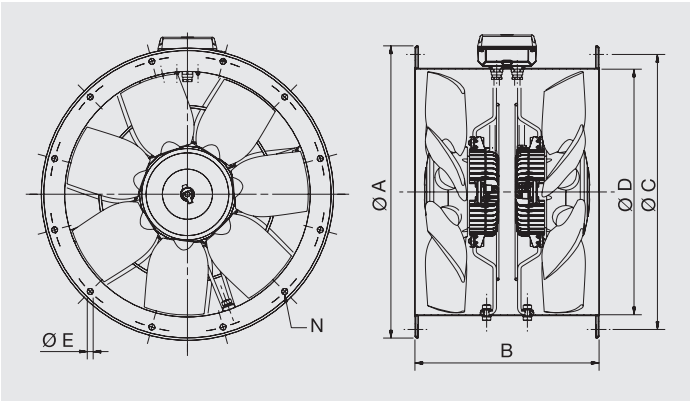

Model	Ø A	B	Ø C	Ø D	Ø E	Number of holes N
450	537	375	500	450	12	8
500	595	375	560	500	12	12
560	655	520	620	560	12	12
630	725	520	690	630	12	12

MOUNTING ACCESSORIES

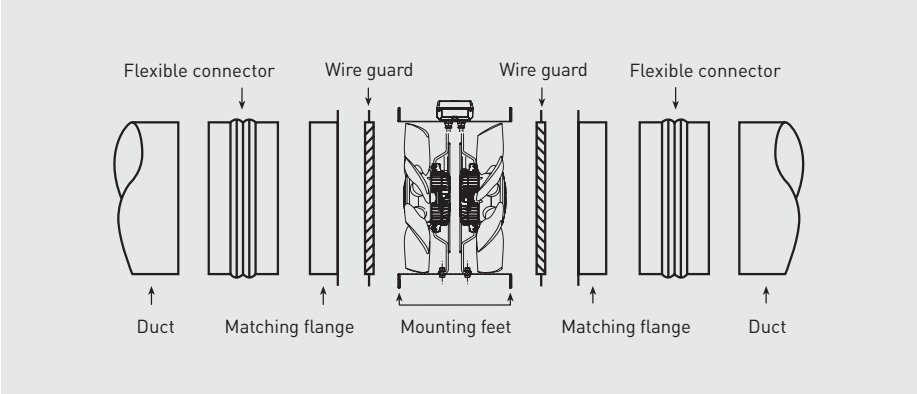

PERFORMANCE CURVES TCBBx2 / TCBTx2

- q_v: Air volume in m^3/h and m^3/s.
- p_{sf}: Static pressure in Pa.
- SFP: Specific fan power in $W/m^3/s$.
- P: Input power in W.
- Measurement category: D.
- Efficiency category: total.
- Fan efficiency without VSD.
- Air flow data in accordance with ISO 5801.
- Sound pressure level dB(A), measured in a free field distance equal to 3 times the diameter, with a minimum of 1,5 m.

MC	Measurement category
EC	Efficiency category
VSD	Speed control: supplied with the fan
SR	Specific ratio
η[%]	Efficiency
N	Efficiency grade
[kW]	Absorbed power
[m³/h]	Air volume
[Pa]	Static pressure
[RPM]	Speed

EXAMPLE CURVE

TCBBx2/4-500

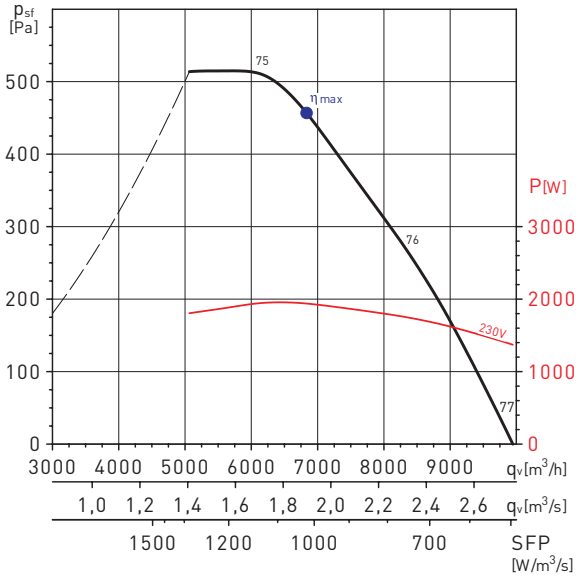

MC*	EC*	VSD*	SR*	η[%]*	N*	[kW]	[m³/h]	[Pa]	[RPM]
D	Total	No	1	50,0	54,5	1,939	6832	514	1393

* See example curve.

PERFORMANCE CURVES – 4 POLE MOTOR

TCBBx2/4-450

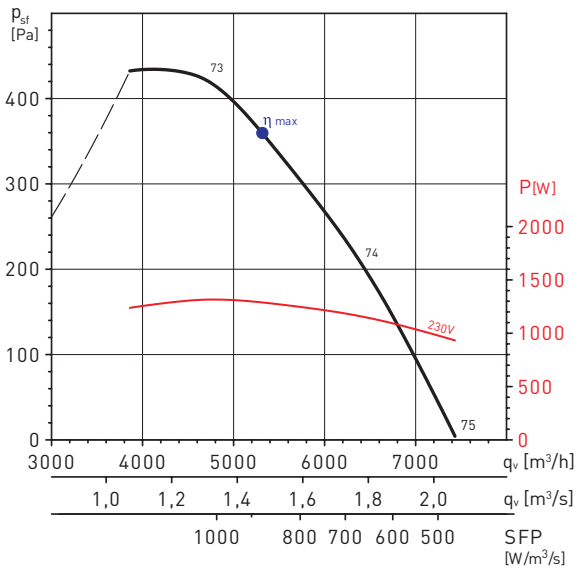

MC*	EC*	VSD*	SR*	η[%]*	N*	[kW]	[m³/h]	[Pa]	[RPM]
D	Total	No	1	46,9	52,5	1,289	5315	411	1356

* See example curve.

TCBBx2/4-500

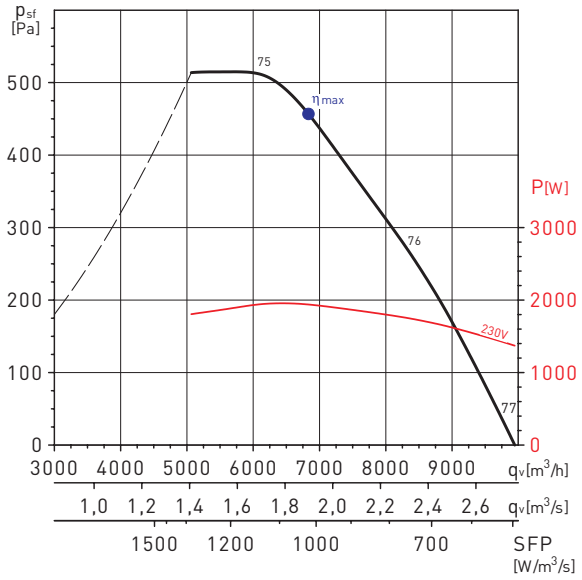

MC*	EC*	VSD*	SR*	η[%]*	N*	[kW]	[m³/h]	[Pa]	[RPM]
D	Total	No	1	50,0	54,5	1,939	6832	514	1393

* See example curve.

TCBBx2/4-560

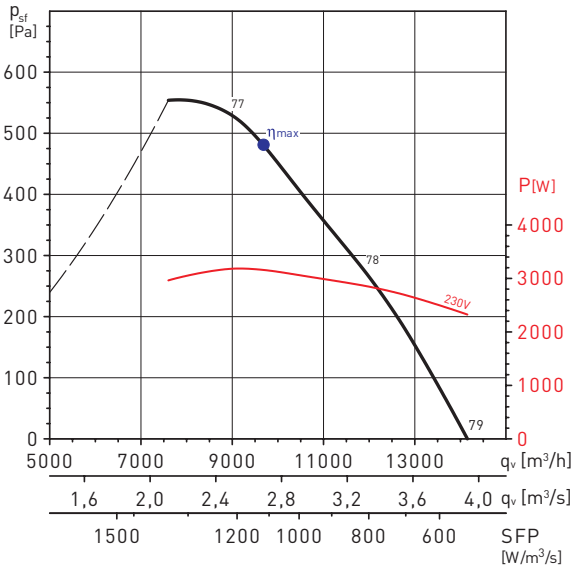

MC*	EC*	VSD*	SR*	η[%]*	N*	[kW]	[m³/h]	[Pa]	[RPM]
D	Total	No	1	46,8	50,0	3,159	9680	552	1349

* See example curve.

TCBBx2/4-630

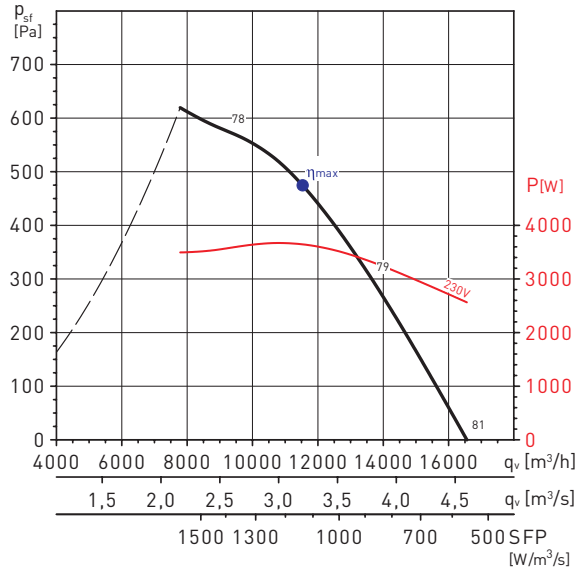

MC*	EC*	VSD*	SR*	η[%]*	N*	[kW]	[m³/h]	[Pa]	[RPM]
D	Total	No	1	47,2	50,0	3,646	11530	539	1328

* See example curve.

PERFORMANCE CURVES – 4 POLE MOTOR

TCBTx2/4-450

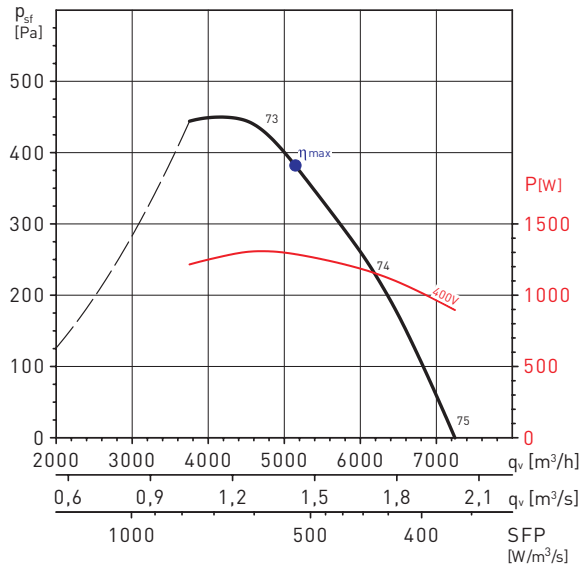

MC*	EC*	VSD*	SR*	η[%]*	N*	[kW]	[m³/h]	[Pa]	[RPM]
D	Total	No	1	47,5	53,1	1,288	5142	431	1379

* See example curve.

TCBTx2/4-500

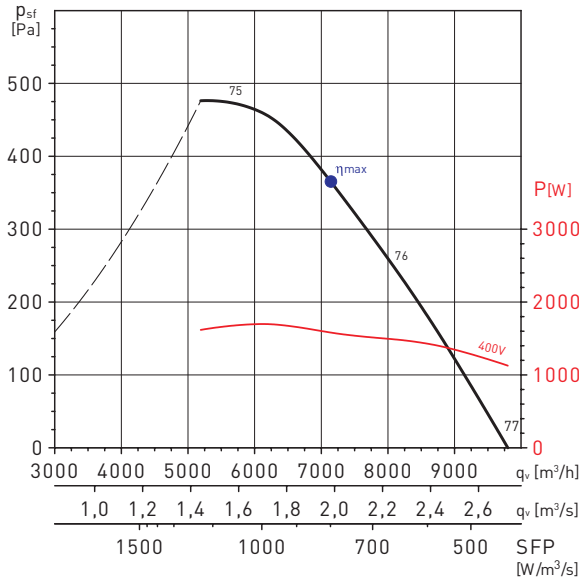

MC*	EC*	VSD*	SR*	η[%]*	N*	[kW]	[m³/h]	[Pa]	[RPM]
D	Total	No	1	53,5	58,6	1,581	7145	427	1348

* See example curve.

TCBTx2/4-560

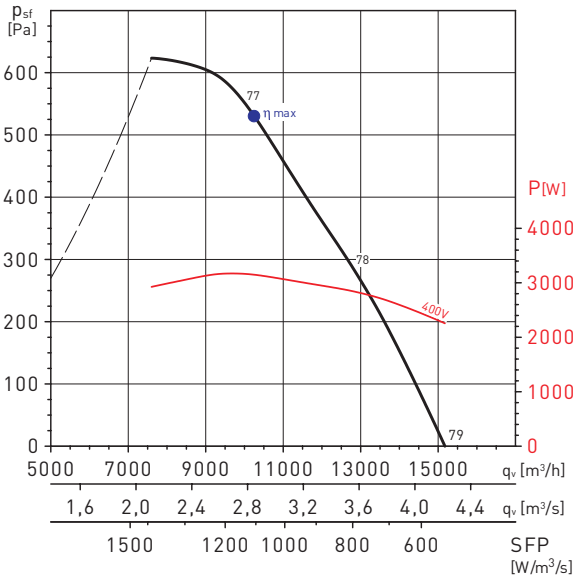

MC*	EC*	VSD*	SR*	η[%]*	N*	[kW]	[m³/h]	[Pa]	[RPM]
D	Total	No	1	55,0	58,2	3,148	10254	611	1365

* See example curve.

TCBTx2/4-630

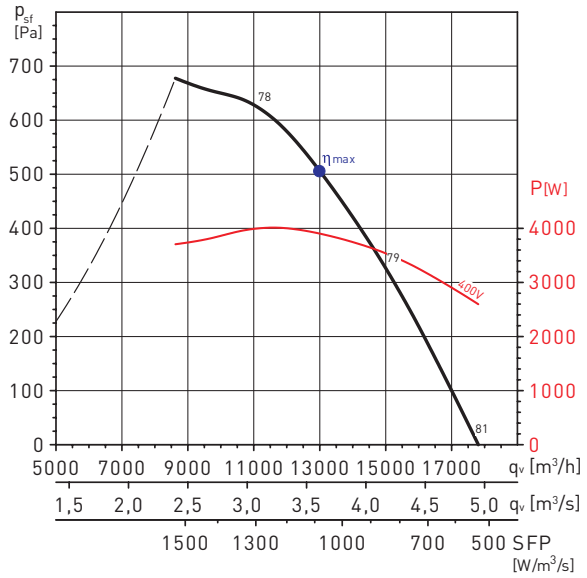

MC*	EC*	VSD*	SR*	η[%]*	N*	[kW]	[m³/h]	[Pa]	[RPM]
D	Total	No	1	54,2	56,8	3,903	12997	587	1387

* See example curve.