PLOT 8 PLOT 7

FRONT ELEVATION

PLOT 8

SIDE ELEVATION

PLOT 7 PLOT 8

REAR ELEVATION

PLOT 7

SIDE ELEVATION

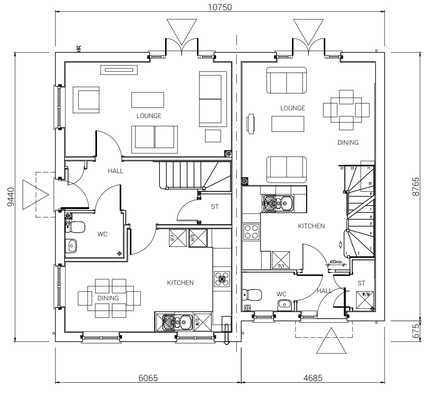

PLOT 8 PLOT 7

GROUND FLOOR PLAN

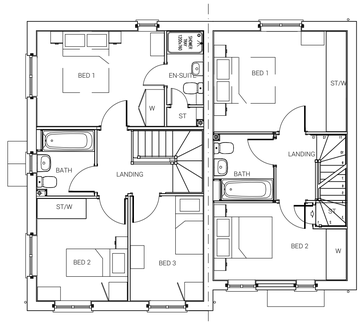

PLOT 8 PLOT 7

FIRST FLOOR PLAN

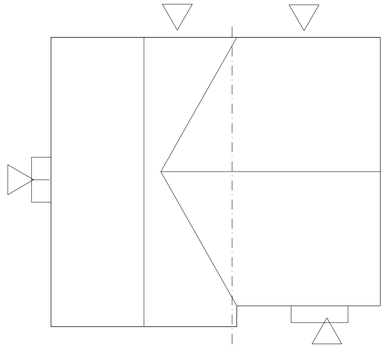

PLOT 8 PLOT 7

ROOF PLAN

Plots 7 & 8
Plot 7
2 BED HOUSE - NA20.
70.10 sq.m. / 754 sq.ft.
Plot 8
3 BED HOUSE - NT31.
96.72 sq.m. / 1040 sq.ft.

Private

0 2 4 6 8 10m

Scale 1:100 at A1

Fathom's Reach
Hayling Island

Taylor Wimpey Southern Counties

+(44) 1962 589 030
designs@sdadesigngroup.com
Ground Floor Studio, Unit 2,
East Horton Business Park,
Knowle Lane, Fair Oak,
Hampshire, SO50 7HN

SDA DESIGN GROUP

DRAWING TITLE	SCALE	SHEET SIZE	DRAWN	CHKD	DATE
Plots 7 & 8 House Types NA20 & NT31 Floor Plans & Elevations	1:100	A1	ML		05/10/2021

DETAIL PLANNING

19-1105-025-1ST

THIS DRAWING IS THE COPYRIGHT OF SDA DESIGN GROUP AND MAY NOT BE COPIED, ALTERED OR REPRODUCED IN ANY FORM, OR PASSED TO A THIRD PARTY WITHOUT THE WRITTEN CONSENT. DIMENSIONS SHOULD BE CHECKED AND VERIFIED ON SITE AND ANY DISCREPANCIES SHOULD BE REPORTED TO THE ARCHITECT. DO NOT SCALE FROM THIS DRAWING, EXCEPT FOR PLANNING PURPOSES. USE FIGURED DIMENSIONS ONLY. IF IN DOUBT ASK FOR CONFIRMATION.

WWW.SDADESIGNGROUP.COM