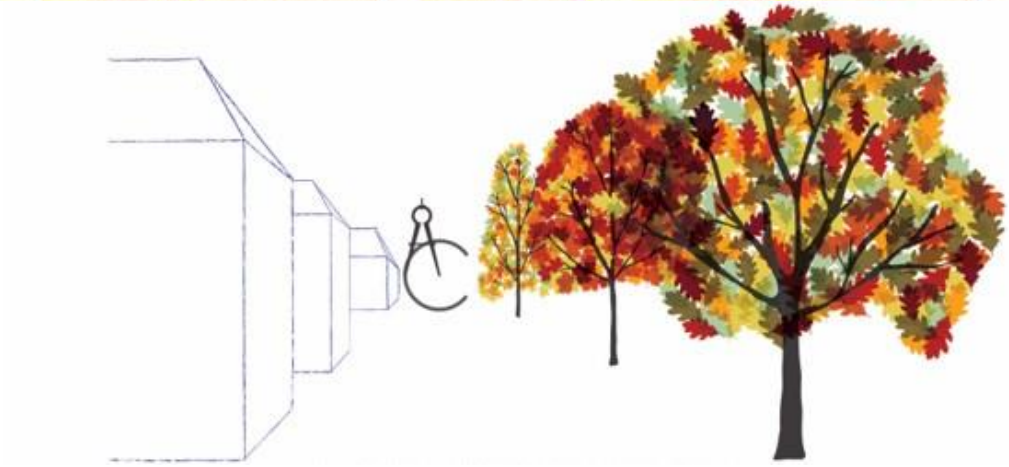

Arbor Cultural Ltd. ***Providing Expertise on Your Trees ®***

BS5837 Arboricultural

Method Statement

OUR REFERENCE	**AC.2022.551**
CLIENT	**Mr Davis Martin**
SITE	**1 Allmara Drive, Waterlooville, Hampshire, PO7 5TT**
REPORT BY	**I S Thompson (known as Tom) M. Arbor. A., BSc. (Hons) Arb, MSc. eFor**
DATE	**16th December 2022**
DATE OF SITE VISIT	**8th December 2022**

Arbor Cultural Ltd.

West Molesey, Surrey, KT8 2QZ

Phone: 0333 577 5523

W: www.arbor-cultural.co.uk

E: admin@arbor-cultural.co.uk

1 Allmara Drive, Waterlooville, Hampshire, PO7 5TT

Application Ref No Unknown **Rear extension to existing detached residential dwelling**

Report produced by

I S Thompson MArborA., BSc. (Hons) Arb MSc. eFor

Principal Arboricultural Consultant

Arbor Cultural Ltd.

36 Central Avenue,

West Molesey, Surrey, KT8 2QZ

Phone: 0333 577 5523

W: www.arbor-cultural.co.uk

E: admin@arbor-cultural.co.uk

Signed

…….

Date……16th December 2022……

Table of Contents

Arboricultural Method Statement (AMS) 1

1 Construction Exclusion Zone 1

2 Ground Protection Measures 3

3 Access Details 4

4 Contractors car parking 4

5 Site Huts and Toilets 4

6 Storage Space 4

7 Additional Precautions 4

8 Demolition 6

9 Hard Surfaces within the RPA 6

10 Construction within the RPA (No-dig) 6

11 Foundation Designs 7

12 Remedial Tree Works 7

13 Use of Herbicides 7

14 Contingency Plan 8

15 Responsibilities 8

16 Arboricultural Supervision 9

17 Landscaping and Replacement Planting 14

References and Bibliography and Glossary of Terms 15

Appendix I Specifications for Tree Protection Measures 18

Appendix II Arboricultural Supervision Recording Template 23

Appendix III Ground Guard Specification 24

Arboricultural Method Statement (AMS)

This AMS is in conjunction with AC.2022.551 Tree Report and AC.2022.551 TPP-01 Rev A

Tree Protection throughout the Duration of Demolition and Construction Works
All the details specified in this method statement will need to be supervised by an Arboricultural Consultant with suitable qualifications and experience.

Arboricultural Method Statement includes a Tree Protection Plan to identify:

- Trees to be retained – identified with a dashed line with RPA written within it and green, blue, or grey location marker circles and the corresponding A, B or C category label.
- Protective fence positions identifying the Construction Exclusion Zones (CEZ).
- Measurements to identify fence positioning in relation to centre of tree or other known features.
- Contractor huts and storage areas

1 Construction Exclusion Zone

1.1 No works will be undertaken within any Construction Exclusion Zone (CEZ). The CEZs are to be afforded protection at all times and will be protected by fencing. A protective fence shall be erected prior to the commencement of any site works e.g., before any materials or machinery are brought on site, development or the stripping of soil commences.

1.2 The fence shall have signs attached to it stating that this is a Construction Exclusion Zone and that **NO WORKS are Permitted within the fence**, see Image 4 in Appendix I. The tree protection fencing may only be removed following completion of all construction works.

1.3 The fence is required to be sited in accordance with the Tree Protection Plan AC.2022.551 TPP-01 Rev A enclosed with this method statement. All tree protection fencing shall be regarded as sacrosanct and will not be removed or altered without prior written consent of the Local Authority Tree Officer.

1.4 They must be constructed as per Figures 1 and 2 in BS 5837 2012 and be fit for excluding any construction activity, (See Appendix I). Any other fence or barrier used must be fit for the purpose.

1.5 The fencing unless otherwise agreed with the tree officer shall consist of Heras fencing panels, around 3.5m long and 2 m tall. They shall be fixed into the ground on scaffold poles driven at least 0.6 m into the ground. They shall be supported by rear struts also secured to posts driven into the ground, see Figure 1 in Appendix I.

1.6 All bolts shall be secured from inside the fencing to prevent easy removal from the outside during the construction phase.

1.7 Where there are **existing hard surfaces**, then rubber feet can be used to support the fencing, but these rubber feet shall be secured into the ground with road pins or other robust metal pins, to prevent the fencing being moved. This stall also be secured by rear struts which are also pinned into the ground, see Figure 2 in Appendix I.

1.8 All tree protection fencing shall be regarded as sacrosanct and will not be removed or altered without prior written consent of the Local Authority Tree Officer.

2 Ground Protection Measures

2.1 The ground protection measures will be for pedestrian work access only. The existing paving will be retained to serve as ground protection measures.

2.2 Ground Guards or a similarly assessed product, as detailed in Appendix III shall be used to cover any gaps in the paving. This is accordance with BS 5837 (2012) and is to prevent compaction to the underlying soil.

2.3 Alternatively, this can consist of a single thickness of scaffold boards placed either on top of a driven scaffold frame to form a suspended walkway, or on top of a compression-resistant layer (e.g., 100mm minimum depth of woodchip), laid onto a geotextile membrane.

2.4 If site vehicle access is required into the site, then more substantial ground protection measures will need to be installed. These shall consist of either metal road plates or precast reinforced concrete slabs or a proprietary system, to an engineering specification, designed in conjunction with arboricultural advice, to accommodate the likely loading to which they will be subjected. This is in accordance with BS5837 (2012).

3 Access Details

3.1 All access for construction vehicles will be from the western end of the site, which is the existing site entrance and driveway, as shown on the plan AC.2022.551 TPP-01 Rev A.

4 Contractors car parking

4.1 This will be off-site.

5 Site Huts and Toilets

5.1 This is a small-scaled development so it will not require a site office. A Portaloo will be in the front garden as shown on the tree protection plan AC.2022.551 TPP-01 Rev A.

6 Storage Space

6.1 This will be in the front garden as shown on the tree protection plan AC.2022.551 TPP-01 Rev A.

7 Additional Precautions

7.1 No storage of materials or lighting of fires will take place within any construction Exclusion Zone. No mixing or storage of materials will take place up a slope where they may leak into a Construction Exclusion Zone.

7.2 There shall generally be a presumption against burning on site. Where it does occur, no fires will be lit within 20 metres of any tree stem and will consider fire size and wind direction so that, no flames come within 5m of any foliage. Situations where fires are not permitted at all are:

- Where the ground is waterlogged as the heat will transfer through the water and damage tree roots significant distances away.
- During periods of drought, where there are peaty or highly organic soils, as there is a risk of underground fires occurring.

7.3 No notice boards, cables or other services will be attached to any tree.

7.4 Materials which may contaminate the soil will not be discharged within 10m of any tree stem. When undertaking the mixing of any material it is essential that, any slope of the ground does not allow contaminates to run towards a tree root area.

7.5 No materials that are likely to have an adverse effect on tree health such as oil, bitumen or cement will be stored or discharged within ten meters of the trunk of any retained trees. In the event of any accident of spillage in or adjacent to the protected trees the contractor/staff is to immediately stop work in the vicinity and inform the project arboriculturist.

7.6 In the event of spillage, the area is to be secured with sandbags on the line of the tree protection area and measures taken to drain/soak any spillage away from the protected area.

8 Demolition

8.1 There will be no demolition within any of the RPAs of retained trees, so there will not need to be any special measures or precautions undertaken other than the tree protection measures as detailed in the report and in AC.2022.551 TPP-01 Rev A, which shall be installed prior to any site works commencing.

9 Hard Surfaces within the RPA

9.1 There is no construction of any new hard surfaces within the RPA of any retained trees, so there is no requirement for any no-dig surface construction method statements.

10 Construction within the RPA (No-dig)

10.1 The only incursions into the RPAs of retained trees are a minimal incursion into the edge of T01's modified RPA, and a minor incursion into the RPA for T03 at the rear. The crown for T03 has been topped regularly and is in very poor form. Additionally, it is a sycamore with good vitality, and will be able to withstand a small amount of root pruning.

10.2 Neither of these incursions are considered to merit alternative foundation designs.

10.3 If any roots are encountered these may be severed using sharp secateurs leaving a clean cut of the smallest possible diameter.

11 Foundation Designs

11.1 As there is minimal construction of foundations within the RPA of any retained trees there will be no requirement for any alternative foundation designs.

12 Remedial Tree Works

12.1 Tree works (see schedule at Appendix IV in the BS5837 Tree Report) will be undertaken in one phase, and this will be undertaken prior to any construction or demolition works and prior to the installation of any tree protection measures.

12.2 All tree works are to be conducted in accordance with BS 3998 (British Standard Recommendations for Tree Work 2010) unless otherwise specified with clear justification for any deviation from the British Standard.

12.3 There is no further tree surgery proposed as part of this application.

12.4 If at any time additional pruning works are required permission must be sought from the Local Planning Authority first and then conducted in accordance with BS 3998 Recommendations for Tree Works 2010, unless otherwise specified with clear justification for any deviation from the British Standard.

13 Use of Herbicides

13.1 It is not planned to use any herbicide in the proposed development unless they are used in the preparation of any no-dig construction. However, if any is required it shall be systemic, spot applied, and mixed according to manufacturer's recommendations.

14 Contingency Plan

14.1 Water is readily available on site and will be used to flush spilt materials through the soil and avoid contamination to tree roots. At the time of any spillage the main contractor will contact an arboriculturist for advice.

15 Responsibilities

15.1 It will be the responsibility of the main contractor to ensure that the planning conditions attached to planning consent are adhered to always and that a monitoring regime regarding tree protection is adopted on site.

15.2 The main contractor will be responsible for contacting the Local Planning Authority at any time issues are raised related to the trees on site.

15.3 The main contractor will ensure the build sequence is appropriate to ensure that no damage occurs to the trees during the construction processes. Protective fences will remain in position until completion of **ALL** construction works on the site.

15.4 The fencing, signage and ground protection measures must be maintained in position at all times and shall be checked on a regular basis by an on-site person designated that responsibility.

15.5 The main contractor will be responsible for ensuring sub-contractors do not conduct any process or operation that is likely to adversely impact upon any tree on site or those immediately adjacent to it.

16 Arboricultural Supervision

16.1 Since BS5837 was amended in 2012 site supervision has been identified as a key element of the process of protecting trees during construction. It requires that there be "an auditable system of arboricultural site monitoring. This should extend to arboricultural supervision whenever construction and development activity is to take place within or adjacent to any RPA."

16.2 Site Supervision

16.2.1 A site agent must be nominated to be responsible for all arboricultural matters on site. They must be nominated for each phase of work if demolition and construction contracts are to be awarded separately. The agent(s) must:

- **Be present on site for most of the time.**
- **Be aware of the arboricultural responsibilities. This will require a site briefing/meeting between the agent and arboricultural consultant prior to the commencement of each phase of works.**
- **Have the authority to stop any work that is causing or has the potential to cause harm to any trees.**
- **Be responsible for ensuring that all site operatives are aware of their responsibilities towards trees on the site and the consequences of failure to observe these responsibilities.**
- **Make immediate contact with the local authority and/or a retained arboriculturist in the event of any tree related problems occurring, whether actual or potential**
- **Contact details for Arbor Cultural Ltd are provided within this report.**
- **Contact details for local authority tree officer are.**

Tree officer

Address.	**Public Service Plaza, Civic Centre Road, Havant, PO9 2AX**
Main Switchboard	**023 9244 6019**
Email	**treeofficer@havant.gov.uk**

16.3 Arboricultural Consultant

16.3.1 A suitably qualified arboricultural consultant shall be appointed to oversee development works and liaise with the council and the developer and contractors during the construction phase to ensure compliance with these guidelines.

16.3.2 Note: Failure to fulfil planning conditions or breaches of statutory legislation can lead to delays due to "stop notices" and can lead to the prosecution of contractors and company directors.

16.3.3 Adequate site supervision can protect the developer from delays, wasted expense and criminal prosecution.

16.3.4 The arboriculturalist will arrive at the site, check in at the site office and be safely escorted around the site by the site agent, checking the maintenance of tree protection measures. Routine visits will generally be unannounced. However, the arboriculturist will also visit subject to advance notification and agreement to supervise any agreed works within the RPA.

16.3.5 Monitoring shall involve a schedule of routine visits. The frequency of these visits will vary depending on the size of the proposed development and the site-specific constraints. For private single residential developments, this will normally involve monthly supervision but for larger sites with multiple structures this could be weekly or fortnightly. This will need to be agreed with the local tree officer.

16.3.6 These visits shall include a pre-commencement meeting to ensure that all tree protection measures have been implemented and a sign-off sheet at the end of the development. Each visit will be accompanied by a small report detailing the findings identifying any actions and addressing any issues that have arisen. This is to provide ongoing liaison between the local planning authority (LPA), and all personnel involved in the site development. Any defects requiring rectifying must be notified to the site agent the client and the LPA by email as soon as possible.

16.3.7 Emergency situations will be notified by phone calls. Appropriate records will be kept and made available to the LPA if required to show evidence of the site monitoring. An example of this is shown in Appendix II.

16.3.8 Supervision will not require the arboriculturist to be present throughout all operations, to ensure that all tasks are conducted as per the approved methodology. They will be required at key times during any planned or unplanned incursions into the tree protection areas. This supervision will require the arboriculturist to attend site, if not for the whole task, then long enough to ensure that all the arboricultural objectives are fully addressed. Where tasks are ongoing, provided that the arboriculturalist is satisfied that the method statement is being followed and after an appropriate briefing the supervision may be reduced to telephone or email contact between the site supervisor and the arboriculturist.

16.4 The critical stages for site supervision are as follows:

I Prior to the start of construction, all tree protection measures as described must be checked as appropriate and signed off by an arboriculturalist. There will be a pre-commencement meeting with all party attendance, including LPA tree officer, to ensure that there are no unresolved issues.

II At predetermined activity related times as specified in Table 1. The tree protection measures as described must be checked as being retained and signed off by an arboriculturalist. All defects to be reported to the client and LPA.

III The potentially damaging activity to the trees must be observed by a suitably qualified arboriculturalist to ensure that the method statements are adhered to, and the damage is kept to an absolute minimum. All defects to be reported to the client and LPA.

IV At periodic intervals during the construction process, the tree protection measures must be checked as being retained and signed off. All defects to be reported to the client and LPA.

V At the end of the construction phase, an arboricultural consultant must check that no damage has occurred to the trees and any remedial measures, e.g., de-compaction of soil must be recommended as required and remedial measures undertaken as soon as practicable. The outcome shall be reported to the client and local authority.

16.4.1 The site supervision visits will be documented and circulated to the site agent, developer, architect, and Local Planning Authority as appropriate. The reports will detail the date of the visit, the operations being supervised and any issues that require action to meet the aims and objectives of this method statement.

Table 1 Site Supervision Programme

	Activity	**Comments**
1	Inspection of all tree protection measures to ensure that it is secure and fit for purpose prior to work commencing. This will need to be signed off by the arboriculturalist.	Report any defects or damage to the client and the LPA and ensure that they are made good.
2	Pre-commencement meeting with all party attendance, including LPA tree officer, to ensure that there are no unresolved issues. This will need to be signed off by the arboriculturalist.	Report any defects or damage to the client and the LPA and ensure that they are made good.
3	Supervision of the hand-dig construction of the foundations within the RPAs, to ensure that any tree damage or soil compaction is kept to a minimum and work is undertaken in accordance with the method statement. This will need to be signed off by the arboriculturalist.	Report any defects or damage to the client and the LPA and ensure that they are made good.
6	Monthly monitoring of site and tree protection measures. This will need to be signed off by the arboriculturalist.	Report any defects or damage to the client and the LPA and ensure that they are made good.
Final	Completion of work, removal of all tree protection measures and inspection of trees and root zone for any damage. Any compaction of the soil must be rectified with remedial measures and damaged branches taken back to suitable growth points with a clean cut. This will need to be signed off by the arboriculturalist.	Report any defects or damage to the client and the LPA and ensure that they are made good.

17 Landscaping and Replacement Planting

17.1 All of the mature and surveyed trees are being retained and are unaffected so the impact on the local amenity will be minimal. There remains a good canopy cover both in the property and the wider area.

17.2 There is no new planting proposed with this application.

References and Bibliography and Glossary of Terms

References and Bibliography

Anon, British Standard BS 5837 (2012), "Guide for Trees in Relation to Construction", British Standards Institute. London.

Anon, British Standard BS 3998 (2010), "Recommendations for Tree Work", British Standards Institute. London.

Biddle, PG., (1998), "Tree Root damage to Buildings", Willowmead Publishing Ltd. 2 Volumes, 376 & 299 pp.

Building Research Establishment, BRE Digests 63, 64, 67, Soils & Foundations, 240, 241 & 242, Low Rise Buildings on Shrinkable Clay Soils.

Cutler, D.F., (1995), "Interactions of Tree Roots & Buildings", In Watson, G., and Neely, D., (Eds.), Proceedings of Trees & Buildings Conference, Lisle, Illinois, ISA Publications.

Cutler, D. F., and I.B.K. Richardson, (1989). Tree Roots and Buildings. Longman Scientific and technical. 2nd Ed. 71pp.

DOE, "Tree Preservation Orders – A guide to the law and good practice," Department of Environment, 1994.

Gasson, P.E. and Cutler, D.F. (1990) Tree root plate morphology. Arboricultural Journal 14, 193-264

Mercer G., Reeves A., and O'Callaghan D. (2012) The Relationship between Trees, Distance to Buildings and Subsidence Events on Shrinkable Clay Soil, Arboricultural Journal: The International Journal of Urban Forestry, 33:4, 229-245

National House Building Council, (1992) Building near trees. NHBC Standards, Chapter 4.2

Town & Country Planning Act Part VIII (1990). Issued by the Secretary of State for the Environment, HMSO.

Glossary of Terms

Bacterial canker	Has lesions on the stems that can exude a gum like exudate that carries the bacteria.
Brash	Thin wood removed from trees.
Chlorosis/Chlorotic.	An abnormal yellowing or blanching of the leaves due to lack of chlorophyll.
Canopy/Crown	Foliage bearing part of the tree.
Crown lifting.	The removal of the lower branches of the tree.
Crown thinning.	The complete removal of selected limbs/lateral branches to thin the density of the crown.
Dysfunctional wood	Woody tissues no longer function.
Epicormic growth	Young, vigorous shoots arising from the external tissues of a stem. Epicormic growth is usually induced if a limb is removed or is broken off and the light factor changes (sprouts) or if a woody plant is coppiced or pollarded.
Flush cut	A pruning cut close to the parent stem which removes part of the branch bark ridge.
Heartwood	The heartwood is the dark area in the centre of the tree.
Lateral branch	A side branch which arises from a main stem.
Mulch	A layer of bulky organic material placed around the stem.
Occlusion (Occluded)	The process of wound wood closing a wound.
Parasitic	Organisms that live off other organisms, or hosts, to survive
Pathogen	A micro-organism which causes disease in another organism.
Reaction Wood	Additional wood that is put on by a tree to address increased loads.
Reaction Zone	An area where reaction wood is formed.

Glossary of Terms Continued

Saprotrophic	Organisms that at obtain their nutrition from non-living organic materials.
Soft rot	A kind of wood decay in which a fungus degrades cellulose within the cell walls, without causing overall degradation of the wall.
Stem	Principal above ground structural component(s) of a tree that supports its branches.
White rot	Various kinds of wood decay in which lignin, usually together with cellulose and other wood constituents is degraded.
Wound	Injury in a tree caused by a physical force.
Wound Wood	Additional wood that it put on by a tree is reaction to damage or wounding, with the aim of healing over the wound.

Appendix I Specifications for Tree Protection Measures

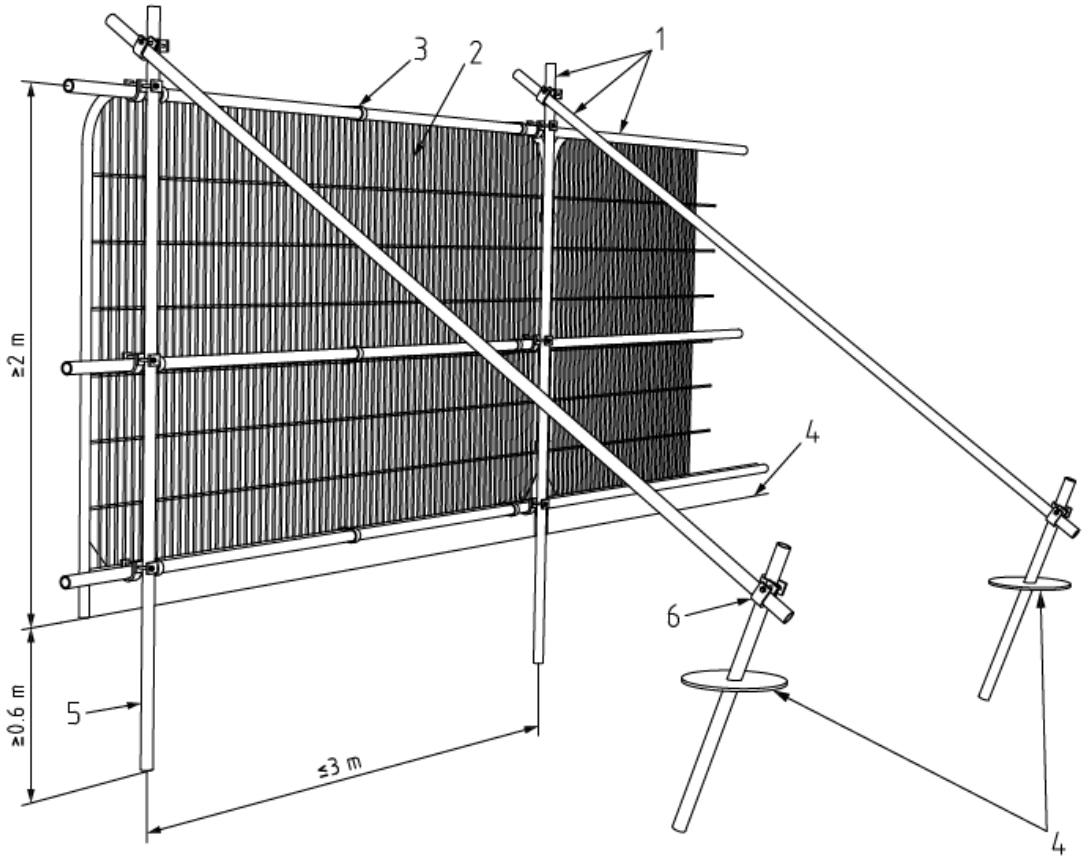

Key

1 Standard scaffold poles
2 Heavy gauge 2 m tall galvanized tube and welded mesh infill panels
3 Panels secured to uprights and cross-members with wire ties
4 Ground level
5 Uprights driven into the ground until secure (minimum depth 0.6 m)
6 Standard scaffold clamps

Figure 1 Default Tree Protection Fencing Design BS5837 (2012)

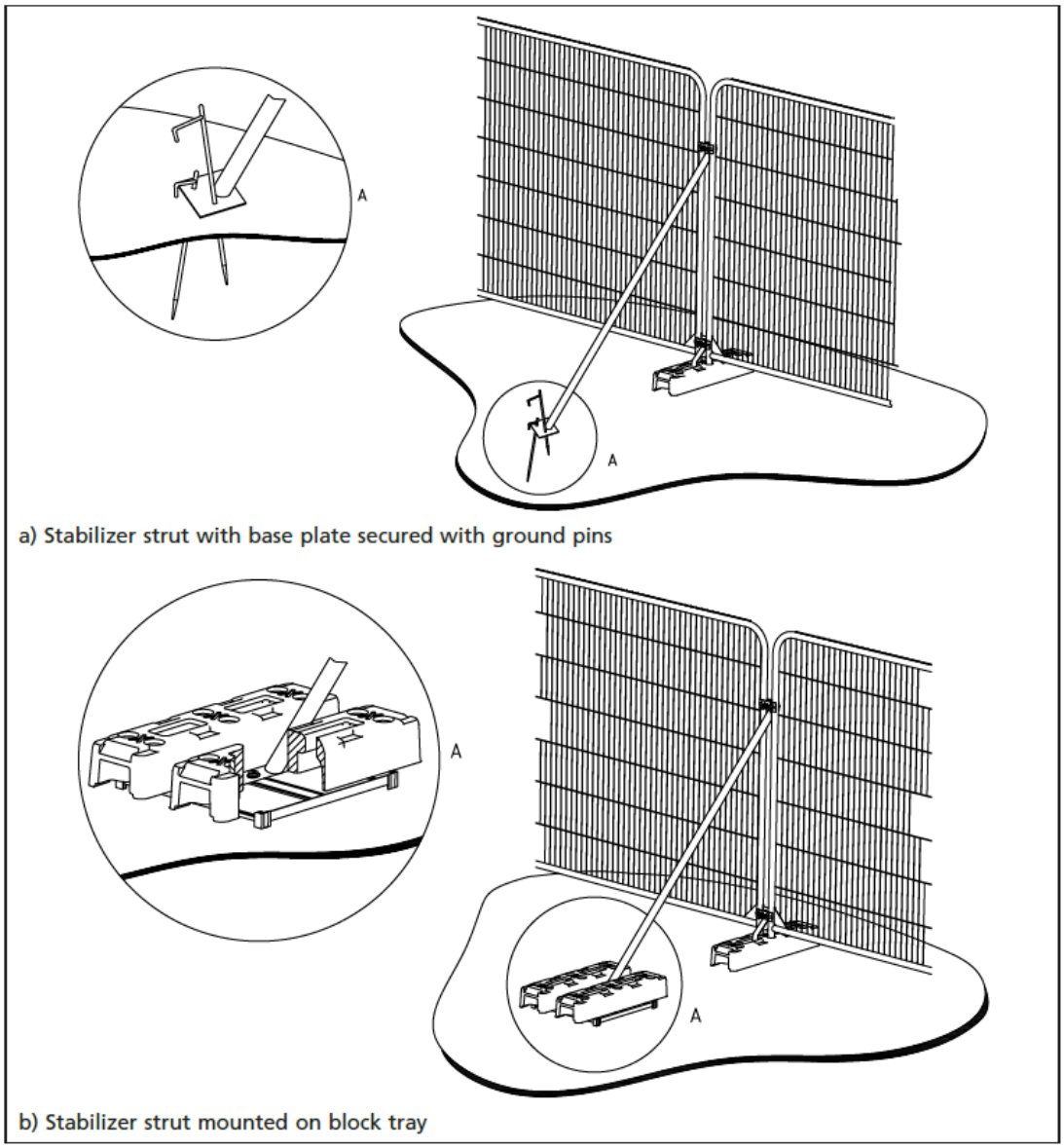

Figure 2 Tree Protection Fencing Design for Hard Surfaced Areas Only (BS5837 2012)

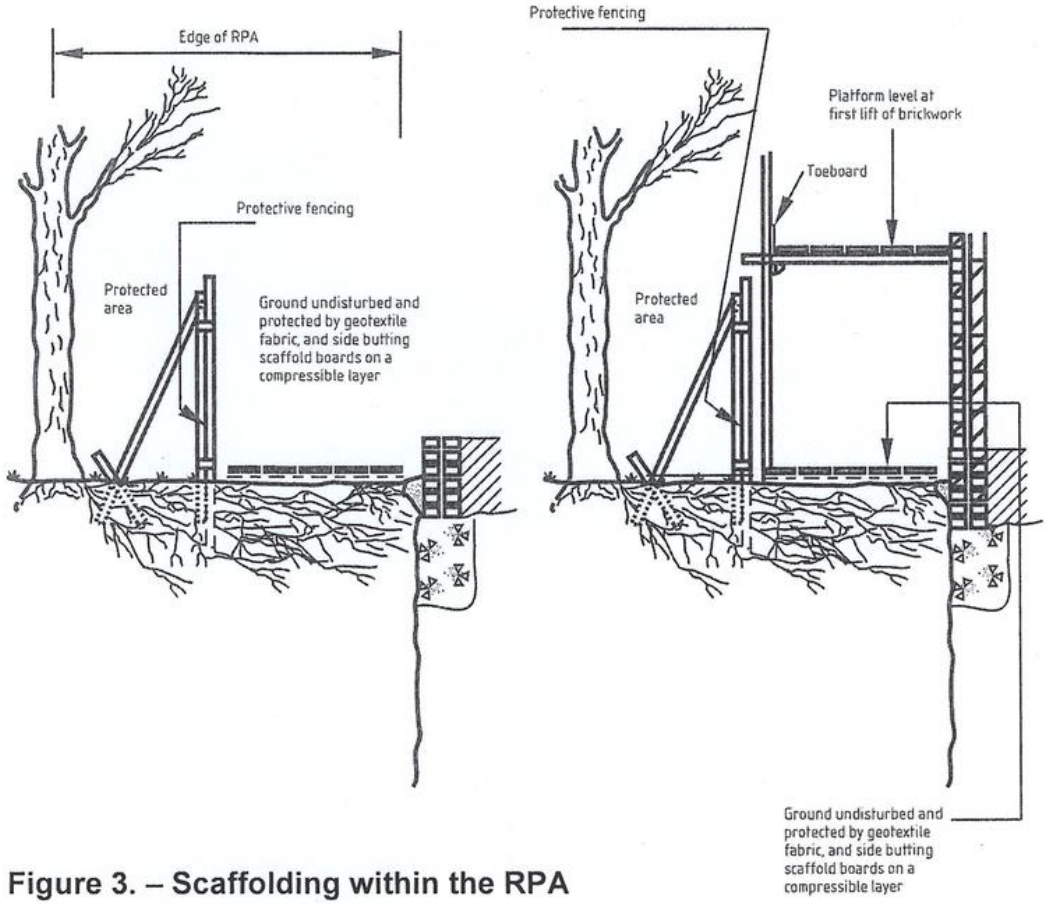

Figure 3. – Scaffolding within the RPA

CONSTRUCTION EXCLUSION ZONE

This area has been identified as a Tree Protection Zone.
No Access is to be Permitted

Do Not Enter Without Specific Instruction
from the Tree Officer or Project Arboricultural Consultant

Figure 4 Construction Exclusion Zone Signage Example

Figure 5 Construction Exclusion Zone Signage Example

Appendix II Arboricultural Supervision Recording Template

Client:		**Planning Ref:**	
Local Authority:		**Date:**	
Site Address			
Proposal:			
Visit Checklist	**Y/N**		**Y/N**
Tree Protection Fencing in place		Tree protection as approved	
Ground Protection in place		Ground Protection as approved	
Tree or Ground protection breached		Trees damaged	
Site Agent briefed by AC			
AC briefed by Site Agent			
LPA informed			
Remedial action required			
Comments			
Recommendations			
Outcome			
1			
2			
3			
4			
5			

Appendix III Ground Guard Specification

Ground-Guards
Introduction

Ground-Guards
FastCover

Driven by passion, consistency and excellence, we strive to provide you with the most innovative and forward-thinking ground protection solutions available today.

Our ground protection mats enable you to construct durable roadways, walkways and pad areas, with the support of our highly experienced team who can assist with bespoke designs to suit your specific requirements, step-by-step installation guidance, and an after-sales care service second-to-none.

The suitability of any trackway solution is largely governed by ground and weather conditions, which can vary dramatically from site to site and month to month, and over which we have no control.

Our clients trust us because we offer practical, step-by-step guidance, site visits (subject to location), and technical support. Our highly trained, experienced and friendly support team are ready to provide you with the expertise you need for the job on hand.

The data below highlights the typical applications for the various products in the Ground- Guards range. Please note that as a further precaution, optimum stability can be achieved by the use of a woven geotextile membrane under the mats.

Remember, cutting corners is a big risk to take. Time is money, and life is irreplaceable. If you are in any doubt whatever as to the requirements for your site, feel free to call one of our team for advice.

Product	Surface	Typically suitable for*
LiteTrack	Multiple surfaces	Pedestrians, cars, light goods vehicles
MultiTrack	Multiple surfaces	Pedestrians, cars, construction plant, heavy goods vehicles
MaxiTrack	Multiple surfaces	Pedestrians, cars, construction plant, heavy goods vehicles
BogMats	Multiple surfaces	Construction plant of all sizes, depending on thickness of mats
FastCover	Grass	Pedestrians, golf buggies
	Crushed Stone	Pedestrians, cars, light goods vehicles
	Concrete	Pedestrians, cars, construction plant, heavy goods vehicles
TrenchGuards	Pavements	Pedestrians, cars

*dependent on ground and weather conditions. If in doubt, please speak to our support team for advice.

Rapid, safe and simple pedestrian ground protection

FastCover is a 1200 x 800mm matting system available in 22mm and 43mm thicknesses. It has interlocking flanged edges, and provides clean, safe and well-protected floors in an incredibly rapid installation time.

It's unique add-on end ramp design minimises the possibility of trip hazards, making it the product of choice for any situation where safety is a high priority.

It's numerous applications include pedestrian walkways, indoor and outdoor event floors, temporary car parks, factory flooring and welfare compounds.

Not only is it a low-hazard product, but each mat has been formed from entirely recycled raw material to reduce impact on the environment.

+44 (0) 113 267 6000 Ground-Guards
info@ground-guards.co.uk www.ground-guards.co.uk

+44 (0) 113 267 6000 Ground-Guards
info@ground-guards.co.uk www.ground-guards.co.uk

Ground-Guards
LiteTrack

Ground-Guards
LiteTrack Accessories

The light yet strong ground protection mat

LiteTrack is crafted from a specially recycled LDPE polymer, allowing it to remain flexible enough to follow the contours, yet strong enough to protect your surface.

This cost-conscious system has been created for light vehicles and pedestrian access, making it a great solution for many construction sites and events.

The 2400 x 1200 LiteTrack mats provide the perfect alternative to using plywood, without incurring the expense of a trackway system which may be over-engineered for the job.

With a full range of accessories, LiteTrack is fast becoming the system of choice for contractors, events and local authorities. It's well positioned costing makes it a super investment that will pay dividends for many years to come.

LiteTrack Accessories:

LiteTrack accessories increase efficiency and safety on site. Joiner clips lock the mats together, ground pins reduce slippage on inclines, and HandiHooks make light work of handling.

Many sites are required to segregate between roads and walkways, for protection of pedestrians. Our high-visibility post-and-chain system achieves this rapidly.

SafeStore stillages secure 30 LiteTrack mats in place when not in use. They can be stacked six high, maximising space-saving on site.

1. Double joiner clip
2. Single joiner clip
3. Low profile double joiner clip
4. Low profile single joiner clip
5. Post and chain system
6. Ground anchor pin
7. HandiHook
8. SafeStore stillage

+44 (0) 113 267 6000 Ground-Guards
info@ground-guards.co.uk www.ground-guards.co.uk

+44 (0) 113 267 6000 Ground-Guards
info@ground-guards.co.uk www.ground-guards.co.uk

Ground-Guards
MultiTrack

Ground-Guards
MultiTrack Accessories

100% RECYCLED

The original and best ground protection mat

MultiTrack's unique HDPE polymer offers virtual indestructibility. At 2400 x 1200mm, it weighs just 39kg making it very easy to handle.

With a great range of accessories, trackways and pad areas are rapid to lay, reducing the need for stone roadways and the expense of reinstating these areas.

The dual purpose finish provides both pedestrian and vehicular tread patterns for the price of one. MultiTrack users find huge benefit over any other system. With up to 120 tonnes UDL (uniformly distributed load), these mats remain in a league of their own.

Please note that weight loadings quoted are entirely subject to ground and weather conditions, both of which are beyond our control. Whilst it is the user's responsibility to ascertain their suitability in each instance, our friendly support team are on hand to guide you at every step of your project.

MultiTrack Accessories

MultiTrack accessories compliment the system, increasing efficiency and safety on site. Joiner clips lock the mats together, ground pins reduce slippage on inclines, and HandiHooks make light work of handling.

Many sites are required to segregate between roads and walkways, for protection of pedestrians. Our high-visibility post-and-chain system achieves this rapidly.

SafeStore stillages secure 25 MultiTrack mats in place when not in use. They can be stacked six high, maximising space-saving on site.

1. Double joiner clip
2. Single joiner clip
3. Low profile double joiner clip
4. Low profile single joiner clip
5. Post and chain system
6. Ground anchor pin
7. HandiHook
8. SafeStore stillage

+44 (0) 113 267 6000 Ground-Guards
info@ground-guards.co.uk www.ground-guards.co.uk

+44 (0) 113 267 6000 Ground-Guards
info@ground-guards.co.uk www.ground-guards.co.uk