Technical Note

Site:	Langstone Technology Park
Prepared by:	John Russell
Approved by:	John Russell
Date:	06/07/2022

motion
9 Greyfriars Road
Reading
RG1 1NU

Tel: 0118 206 2932
www.motion.co.uk

Introduction

1.1 This Technical Note (TN) has been prepared on behalf of XLB Property in relation to permitted development on land at Langstone Park, Havant (the Site). The Site was granted planning permission (reference APP/21/00405) to vary conditions of planning permission APP/19/00703, subject to conditions.

1.2 This TN deals with condition 17 which states that:

'The new industrial units shall not be occupied and the new parking spaces in front of Bay 3 of Building 1000 shall not be used until:

- *Details of the design of the proposed barriers; and*
- *A Management Plan for the proposed traffic barriers within the site;*

have been submitted to and approved in writing by the Local Planning Authority. The approved details shall be implemented before any of the new industrial units are occupied, or the new parking spaces in front of Bay 3 of Building 1000 are used, whichever is the earlier, and retained in perpetuity.

The traffic barriers shall prevent the new industrial units and parking accessed to the west of the barriers being utilised by vehicles from Langstone Road between 07.30am and 09.00am.

***Reason**: In the interests of highway safety and operation and having due regard to policies CS20 and DM12 and the National Planning Policy Framework.'*

Details of design of the barriers

1.3 Specifications for the proposed type of barriers are provided at **Appendix A**.

Location of Barriers

1.4 The location of the barriers is shown on the drawing provided at **Appendix B**. The plan shows that with the barrier closed, access to units 1-4 and associated car parking can only be achieved from the west.

Operation of Barriers

1.5 Both the eastbound and the westbound barriers will be closed during the hours of 07:30 and 09:00. During this period, the barrier will be raised to allow vehicles travelling eastbound to pass into the wider Site. The barrier will only be activated by vehicles travelling eastbound.

1.6 The westbound barrier will remain closed during the hours of 07:30-09:00. This will prevent access to units 1-4 and associated car parking for traffic approaching from Langstone Road during these hours. Employees of and visitors to the Site will be informed of the restrictions. Signs will be erected at the barrier informing drivers that there is no access west beyond the barrier between the hours of 07:30 – 09:00.

1.7 In the event that a vehicle reaches the barrier, it will be required to turn and approach from the west. Either the driver will recognise that there is no through route as informed by information signs or else they will be informed by security via the intercom provided as part of the barrier system.

1.8 CCTV will be provided at the barrier connected to the Site's facility management / security. Drivers of vehicles that regularly try to be abuse the restriction will be specifically reminded of the restriction. Continued attempts to abuse the system could result in drivers being prohibited from entering the Site.

1.9 In the event of an emergency, the barriers will be raised by the Site's facility management / security to enable emergency service vehicles clear access.

Appendix A

Barrier Specification

CAME

CAME.COM

FA01075-EN

Automatic barriers - GARD 8 series

EN English

G2081Z

INSTALLATION AND OPERATION

"IMPORTANT SAFETY INSTRUCTIONS FOR INSTALLATION"

"CAUTION: IMPROPER INSTALLATION MAY CAUSE SERIOUS DAMAGE, FOLLOW ALL INSTALLATION INSTRUCTIONS CAREFULLY"

"THIS MANUAL IS ONLY FOR PROFESSIONAL INSTALLERS OR QUALIFIED PERSONS"

ENGLISH

1 Legend of symbols

This symbol indicates sections to be read with particular care.

This symbol indicates sections concernig safety.

This symbol indicates notes to communicate to users.

2 Destination and limits of use

2.1 Destination

The GARD 8 automatic barrier was designed for use in private or public carparks, in residential areas or in highly trafficked areas.

The use of this product for purposes other than as described above and installation executed in a manner other than as instructed in this technical manual are prohibited.

2.2 Limits of use

Passage width of up to 7.60 meters with a 4 second aperture time.

3 Standard followed

Came Cancelli Automatici is ISO 9001:2000 and ISO 14Quality and Environmentally certified. Came entirely designs and manufactures its products in Italy. The product in question compliant to the following legislation: *see Declaration of Compliance.*

4 Description

4.1 Gearmotor

G2081Z was designed and manufactured by CAME CANCELLI AUTOMATICI S.p.A. and is compliant with safety regulations in force.

The cabinet is made of 2.5 mm painted galvanized steel. Inside the cabinet, the electromechanical gearmotor operates with a container for electric board and transformer.

Built with a anti-shearing safety system, it includes a safety contact in the inspection hatch lock.

The GARD 8 automation system is supplied with the following accessories:
G02000 - White-painted tubular aluminium rod, 2m (Ø 100 mm) complete with transparent slot cover;
G04000 - White-painted tubular aluminium rod, 4m (Ø 100 mm) complete with transparent slot cover;
G06000 - White-painted tubular aluminium rod, 6m (Ø 100 mm) complete with transparent slot cover;
G02040 - Ø 40 (yellow) balancing spring;
G04060 - Ø 50 (green) balancing spring;
G06080 - Ø 55 (red) balancing spring;
G06802 - Reinforcement for boom
G06803 - Telescopic joint and additional insert to attach the bar (this is obligatory for accesses of over 3.6m);

The following accessories are optional to the GARD 8 automation system:
RSE - Board for combined battery operation control and/or compass;
G02801 - Flashing dome lamp;
G02802 - Support for mounting the photoelectric cell (DIR) onto the cabinet (not applicable to barriers with bar and rack and/or mobile foot);
G028401 - Luminous cord for movement signalling;
G028402 - Luminous cord connecting cable;
G02807 - Fixed barrier support (obligatory for accesses of over 4m);
G02808 - Mobile barrier support (obligatory for accesses of over 4m);
G02809 - Red reflector strips (package of 20);
G0465 - Aluminium skirt (2 m modules);
G028011 - Door break-out bar bracket.

WARNINGS!
001G02802 Not for barriers fitted with 001G0465 skirt or 001G02808 swing-leg.
001G02808 For passage widths of max 7 m.
001G02807 For passage widths of over 7 m the swing-leg is mandatory.
001G0465 - 001G02808 cannot be used together.
Important! *Check that the safety equipment and accessories are CAME originals; this is a guarantee that also makes the system easy to set up and upkeep.*

4.2 Technical information

GEARMOTOR

Power supply: 230V A.C. 50/60Hz
Motor power supply: 230V A.C. 50/60Hz
Max. absorption: 2.8A
Condenser: 35µF
Rated power: 330W
Max. torque: 250 Nm

Reduction ratio: 1/202
Opening time: 8 s
Operative intermittence: 30%
Protection level: IP54
Weight: 91 kg
Insulation class: I

4.3 Parts description

AUTOMATION UNIT

1. Dome cover
2. Motor shaft plate
3. Intermediate plate
4. Boom-attachment cover
5. Anti-shearing protective cover
6. Cabinet
7. Casing for key-switch and digital selectors
8. Control panel
9. Lever arm
10. Boom-adjustment stopper
11. Transmission connecting rod
12. Gearmotor with encoder
13. Inspection hatch
14. Anchoring plate
15. Clamp
16. Adapter with gasket for SEL-series selectors

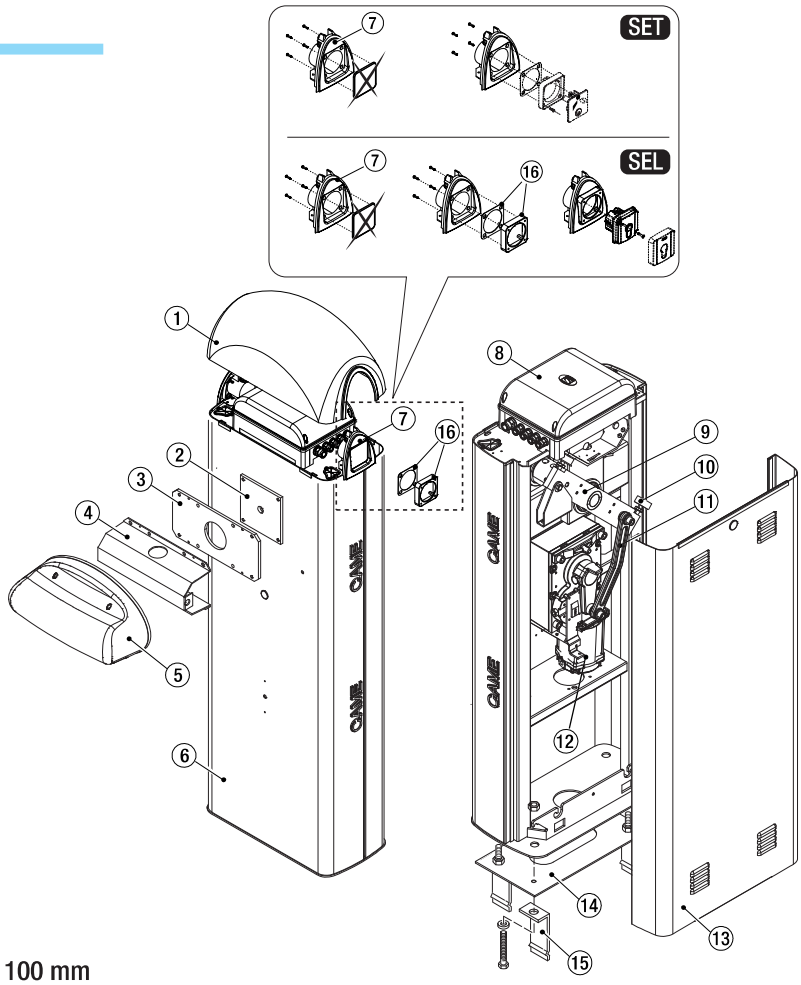

ACCESSORIES

1) G02000/G04000 - Aluminium bar, painted white, Ø 100 mm
2) G02040 - Ø40 (yellow) balancing spring
3) G04060 - Ø50 (green) balancing spring
4) G06080 - Ø55 (red) balancing spring
5) G02806 - Rack
6) G02802 - Support for DIR photoelectric cells
7) G028401 - Luminous cord
8) G02807 - Fixed barrier support
9) G02808 - Mobile barrier support
10) G02809 - Adhesive reflector strips
11) G02801 - Flashing dome lamp
12) G06803 - Telescopic joint and additional insert to attach the bar.

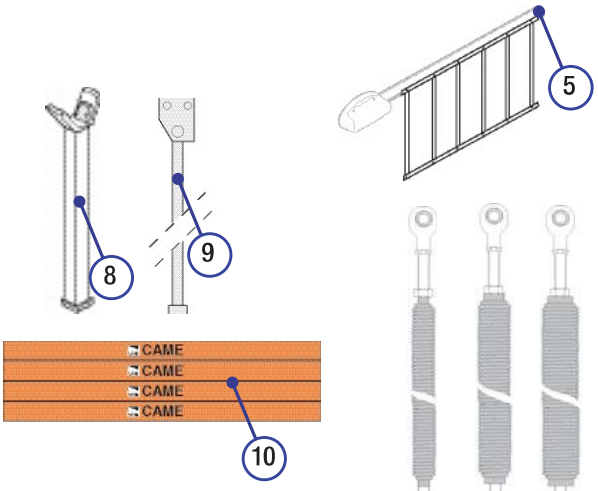

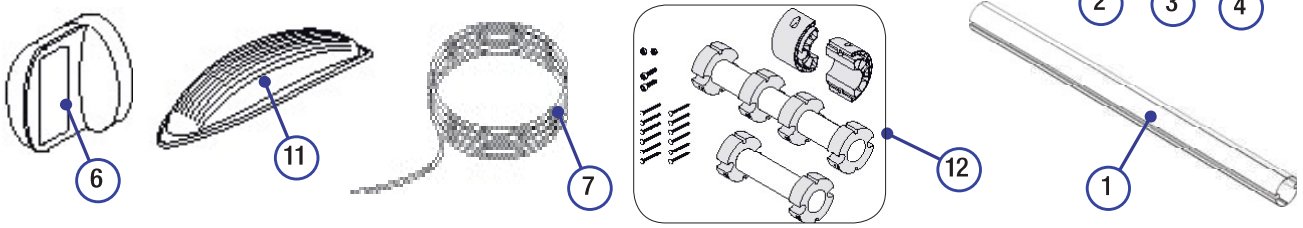

4.4 Size measurements

Measurements in mm

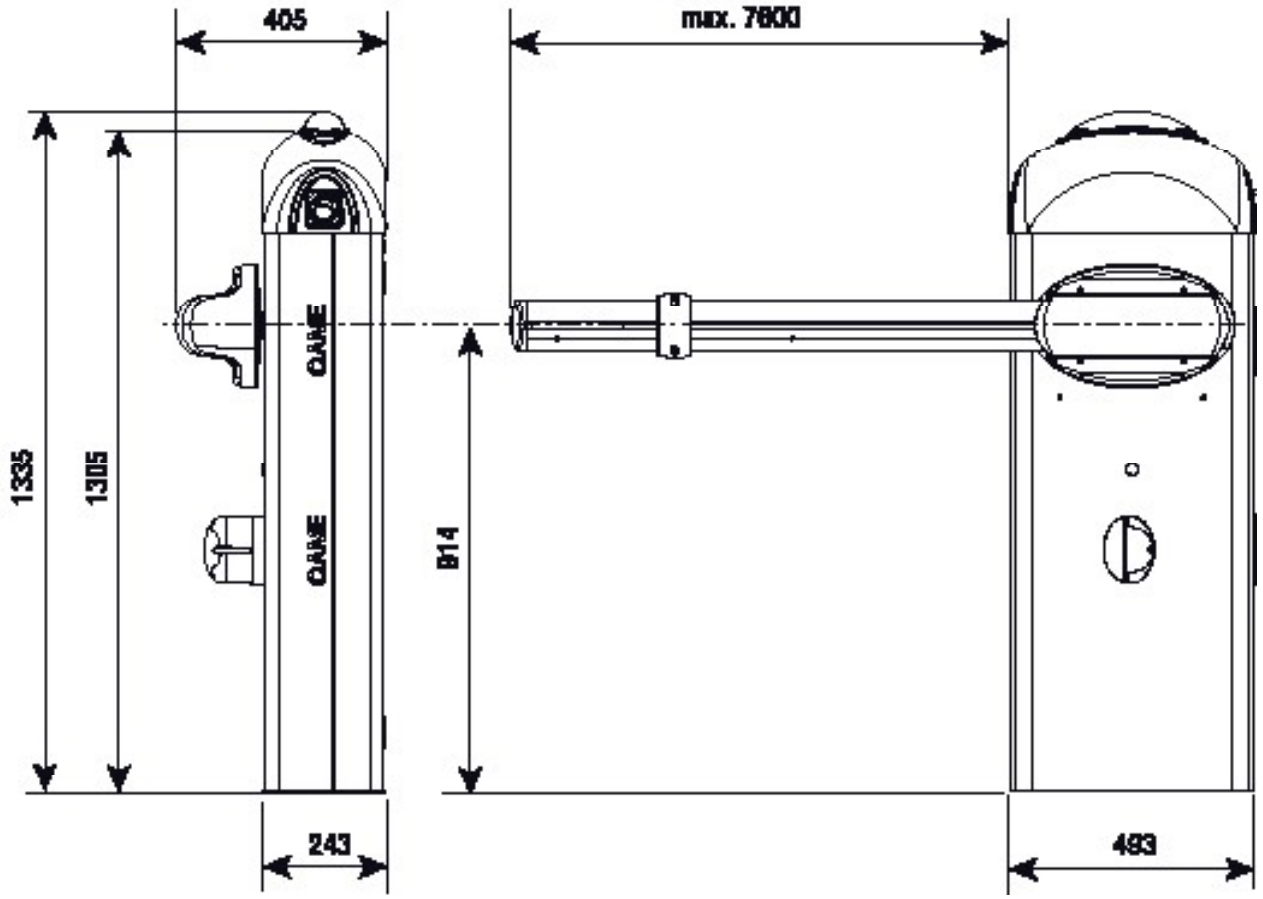

5 Installation

Installation must be carried out by expert qualified personnel and in full observance of regulations in force.

5.1 Preliminary checks

Before proceeding with the installation, it is necessary to:

- Make sure the area selected for the mounting of the base and for the unit itself presents no hazards;
- Provide for suitable omnipolar disconnection device with more than 3 mm between contacts to section power supply;
- ⏚ Connections inside the case made for protection circuit continuity are allowed as long as they include additional insulation with respect to other internal drive parts;
- Install suitable tubes and ducts for electric cable passage to guarantee protection against mechanical damage;

5.2 Tools and materials

Make sure all tools and materials necessary are within reach to install the edge in maximum safety, according to regulations in force. The following figure illustrates the minimum equipment for the installer.

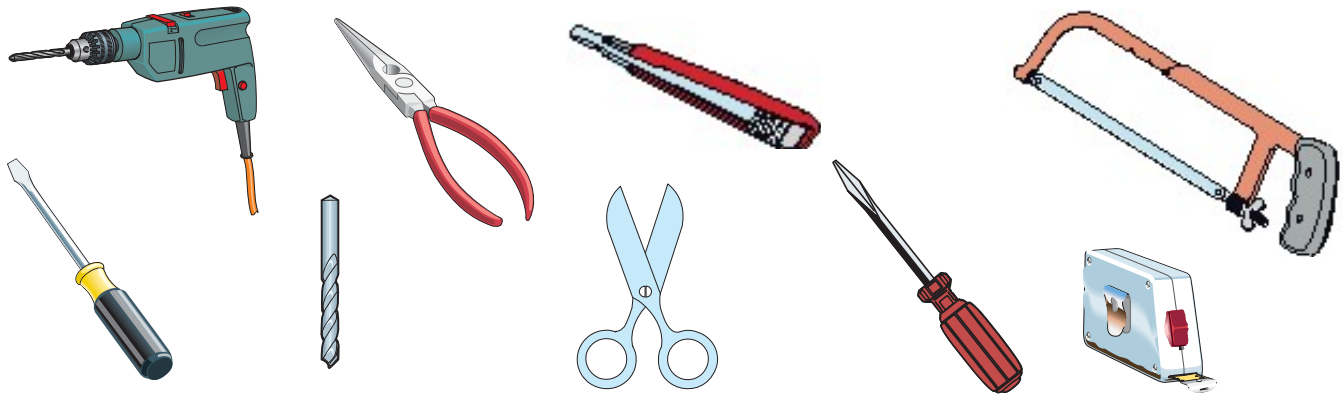

5.3 Cable list and minimun thickness

Connections	Type of cable	Length of cable 1 < 10 m	Length of cable 10 < 20 m	Length of cable 20 < 30 m
Alimentazione 230V	FROR CEI 20-22 CEI EN 50267-2-1	3G x 1,5 mm^2	3G x 2,5 mm^2	3G x 4 mm^2
Photoelectric cells TX		2 x 0,5 mm^2	2 x 0.5 mm^2	2 x 0,5 mm^2
Photoelectric cells RX		4 x 0,5 mm^2	4 x 0,5 mm^2	4 x 0,5 mm^2
24V power supply accessory		2 x 0,5 mm^2	2 x 0,5 mm^2	2 x 1 mm^2
Safety and control divices		2 x 0,5 mm^2	2 x 0,5 mm^2	2 x 0,5 mm^2
Antenna connection	RG58	max. 10m		
Metallic mass detector	(see documents provided with product)			

N.B.: An evaluation of the size of the cables with lengths other than the data in the table must be made based on the effective absorption of the connected devices, according to the instructions indicated by the CEI EN 60204-1 standards.
For connections that require several loads on the same line (sequential), the size given on the table must be re-evaluated based on actual absorption and distances.

5.4 Standar installation

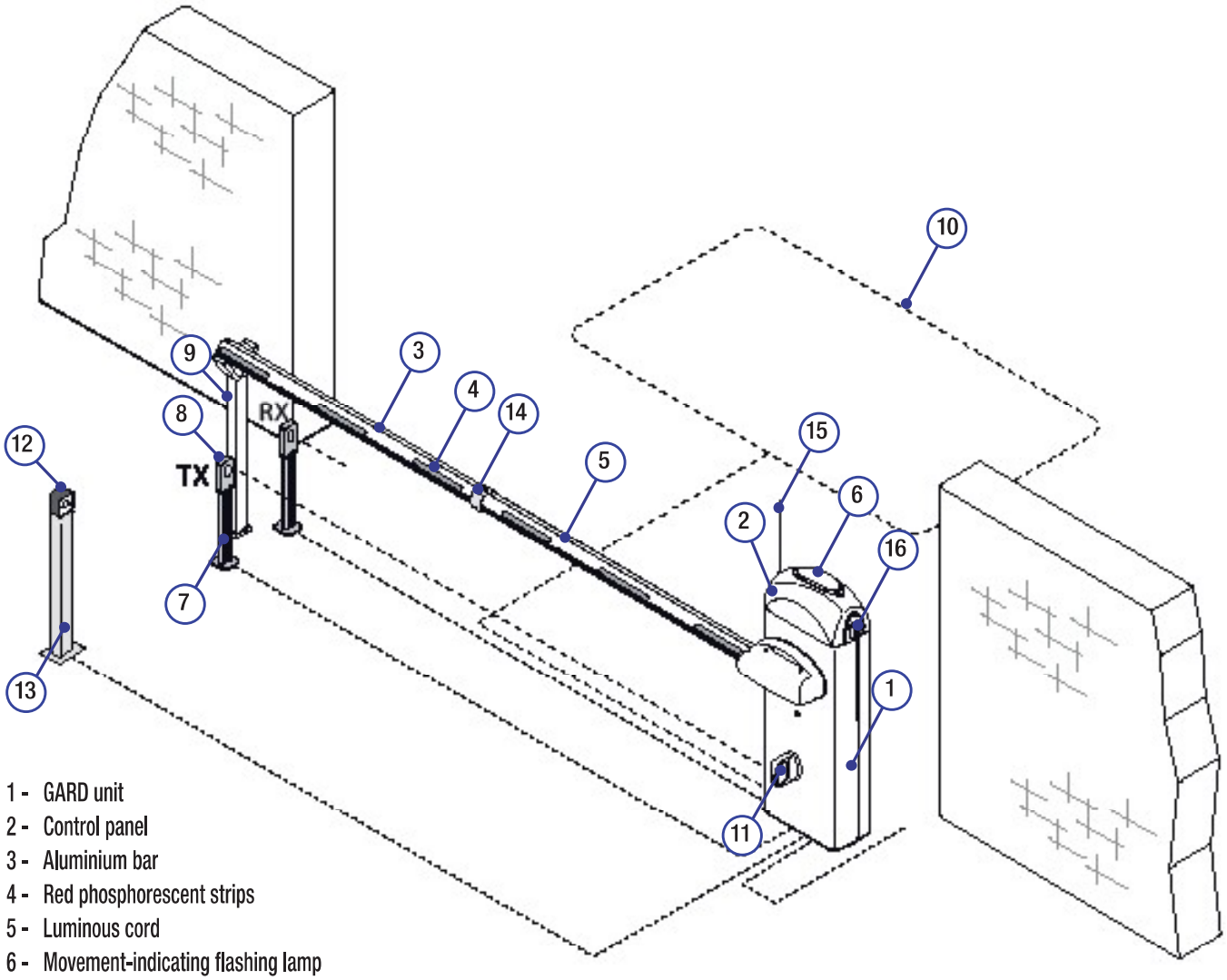

1 - GARD unit
2 - Control panel
3 - Aluminium bar
4 - Red phosphorescent strips
5 - Luminous cord
6 - Movement-indicating flashing lamp
7 - Column for photoelectric cells
8 - Photoelectric cells
9 - Fixed barrier support
10 - Magnetic sensor
11 - Photoelectric cell support
12 - Command divices (Keyboard, magnetic key, card, etc.)
13 - Column for reader
14 - Joint for rod
15 - Antenne
16 - Key-operated selector switch

ENGLISH

5.5 Fitting for unit base

⚠ The following applications are only examples, as the space required for unit installation and the accessories vary depending on dimensions and therefore it is up to the installer to select the best solution.

- Prepare a hole to house the fixing base and prepare sheath tubes from the branch pit for the connections. N.B. the number of tubes depends on the type of system and the accessories you will hook up.

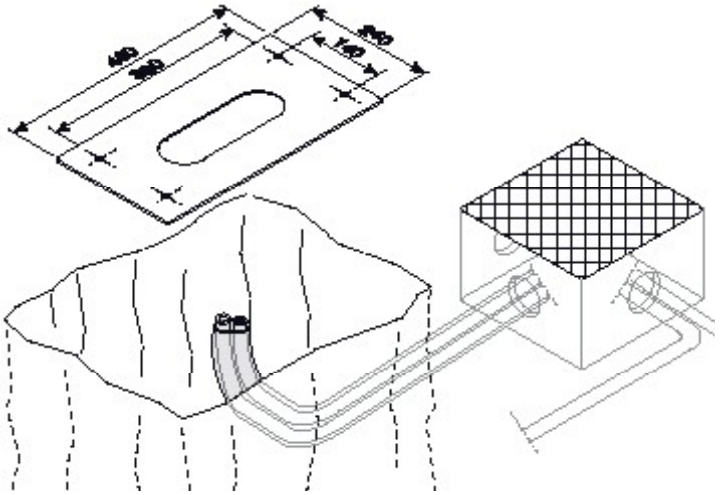

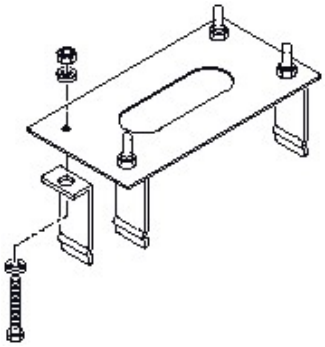

- Assemble the four anchoring clamps at the base.

- Fill the hole with concrete and immerge the clamps and the fixing base, paying particular attention to the sheath tube which must go through the hole at the base. The base must be perfectly level, clean and with the screw threads fully on the surface.

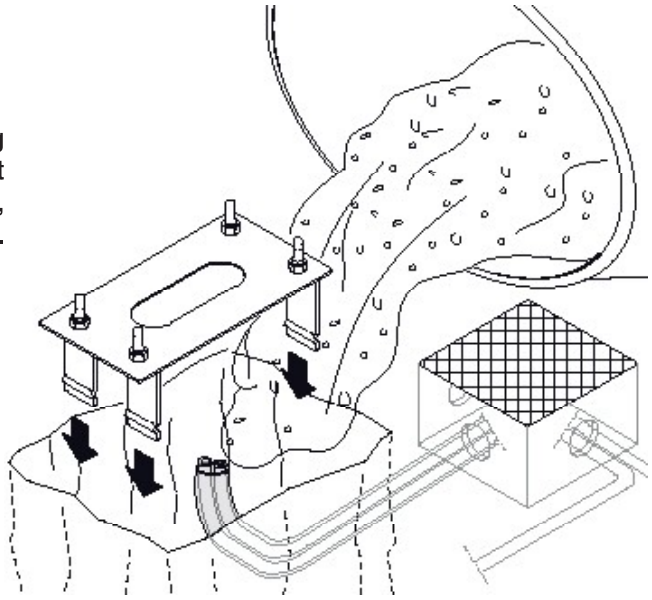

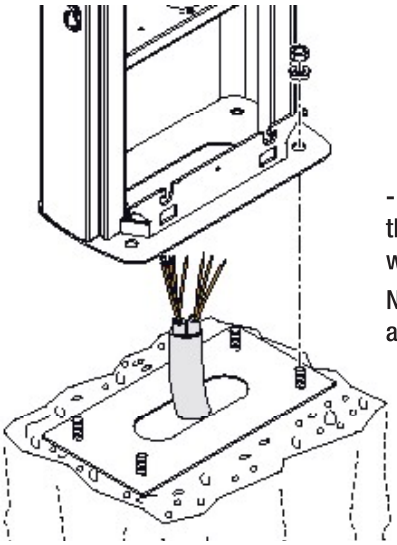

- Remove the nuts and washers from the threaded screws, position the cabinet on the base in correspondence with the 4 threaded screws and secure with the nuts and washers.

Note: We recommend installing the cabinet with the inspection hatch facing the internal area.

5.6 Installation of the Unit

- Remove the two screws at the upper dome's side and lift it.
Insert the customised key in the lock, turn it counter-clockwise and remove the hatch from the cabinet.

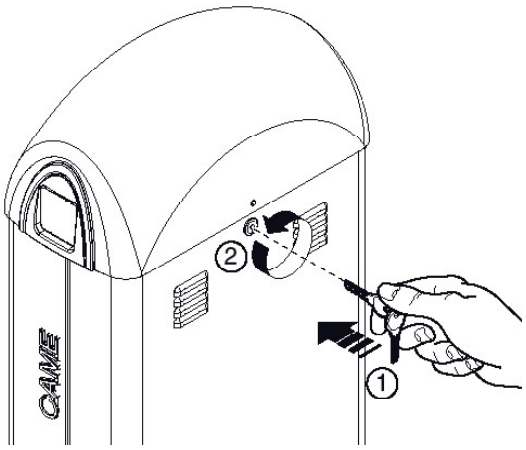

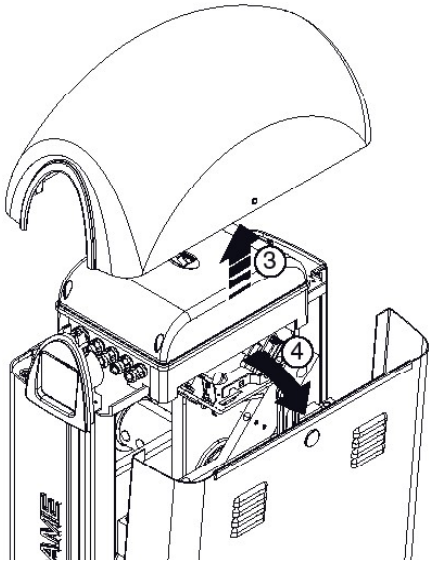

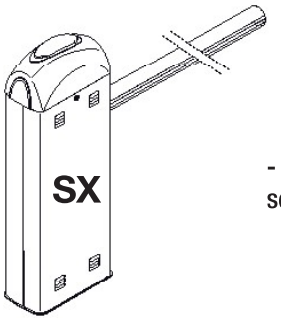

- The barrier is designed to be installed on the left of the gateway as seen from inside.

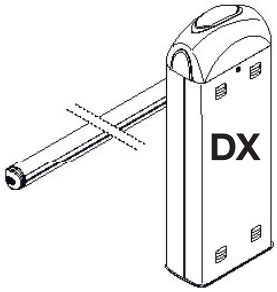

Should installation on the right be required, the direction of the bar's opening must be inverted. Proceed in the following manner:

- remove the spring securing bracket and the transmission rod from the lever arm;
- loosen the motor support grub screw;
- rotate the lever arm by 90°;

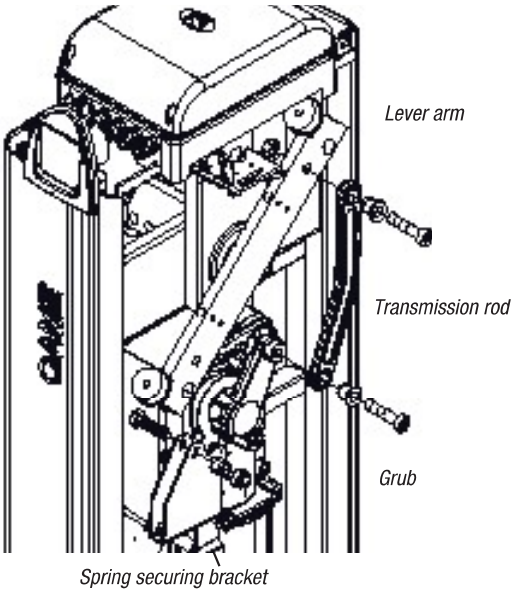

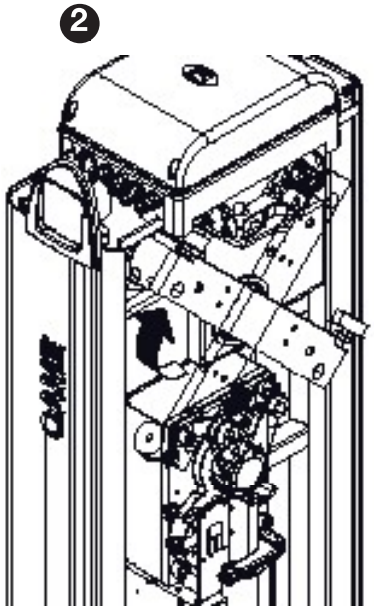

- Fix the spring securing bracket and the transmission rod on the side opposite that of lever arm;
- tighten the grub screw;
- invert the motor's U-V phases and the FA and FC endstop wires on the control panel terminal.

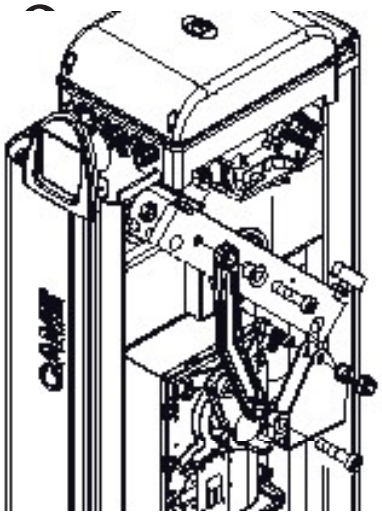

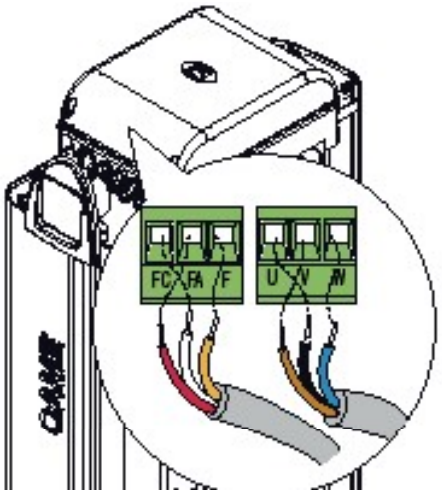

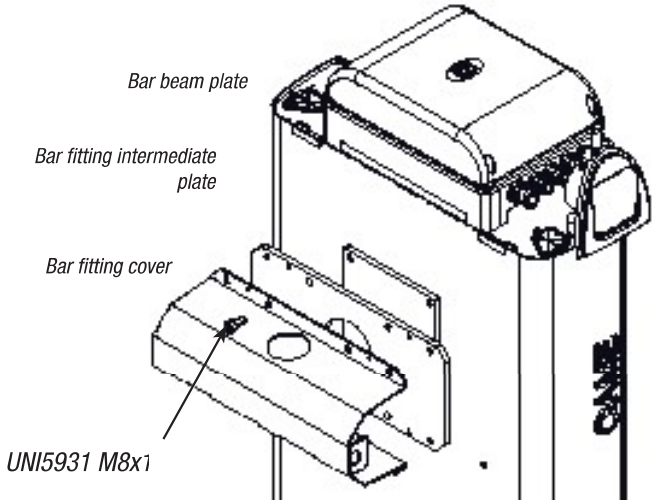

- Position the middle plate between the fitting plate and the bar-fitting cover, and put in one UNI 5931 M8x20 screw without tightening it to facilitate bar assembly.

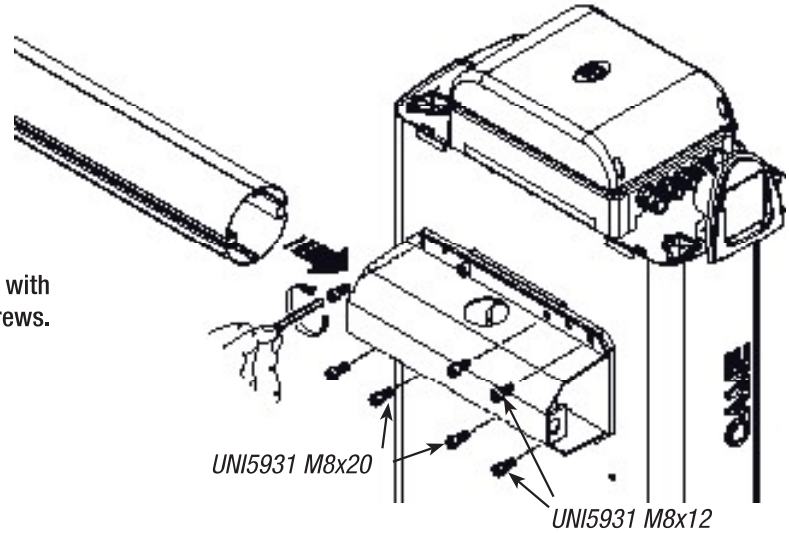

- Insert the bar in the fitting cover and secure it with screws.

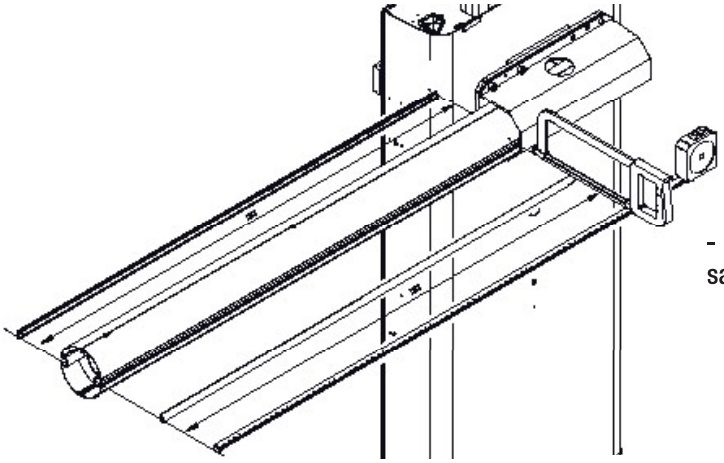

- Measure the length of the bar, cut the bar slot to the same length.

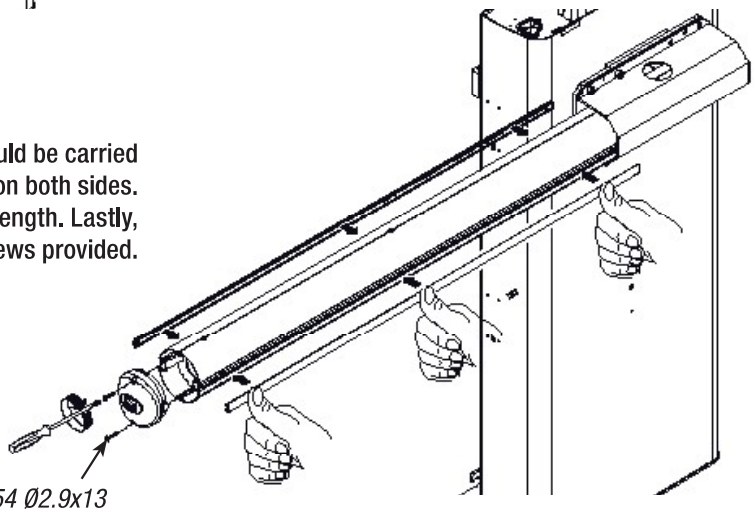

- Insert it in the bar's conduit, a procedure that should be carried out on both sides.
Insert the shock-resistant profile and cut excess length. Lastly, secure the bar end plug with the screws provided.

- Tighten the anti-shearing protection cover to the bar fitting with UNI6954 Ø3.9x19 screws.

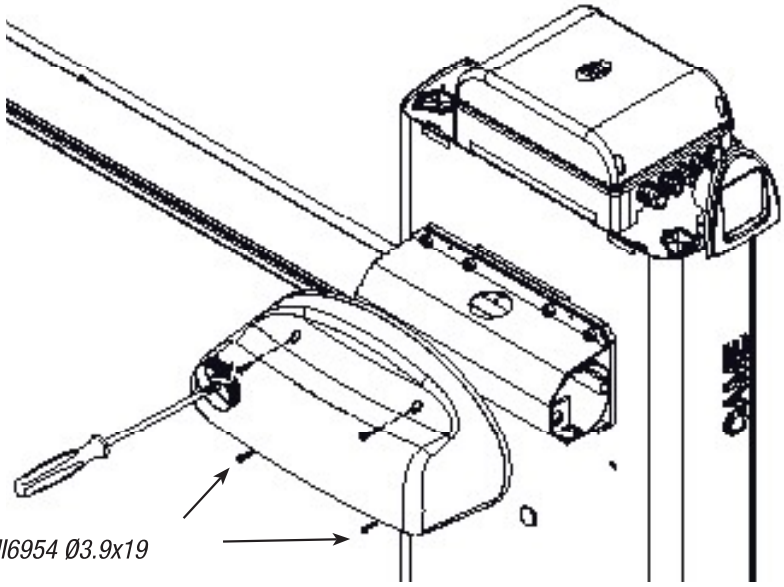

ENGLISH

5.7 Bar balancing

- Prior to bar balancing, select a suitable spring depending on the situation at hand. See table below:

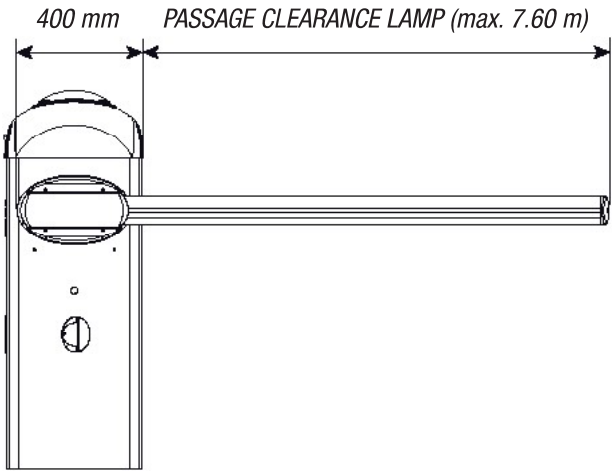

SPRING TYPES

- *Spring G02040 Øe = 40 mm*
- *Spring G04060 Øe = 50 mm*
- *Spring G06080 Øe = 55 mm*

Passage clearance lamp (m)		2.0	2.5	3.0	3.5	4.0	4.5	5.0	5.5	6.0	6.5	7.0	7.6
Bare bar*	first spring												
	second spring												
Bare bar* + mobile barrier support	first spring												
	second spring												
Bare bar* + luminous cord	first spring												
	second spring												
Bare bar* + luminous cord + mobile barrier support	first spring												
	second spring												
Bare bar* + rack	first spring												
	second spring												
Bare bar* + rack + luminous cord	first spring												
	second spring												

** By Bare bar we mean a bar complete with the transparent slot cover and end plug.*

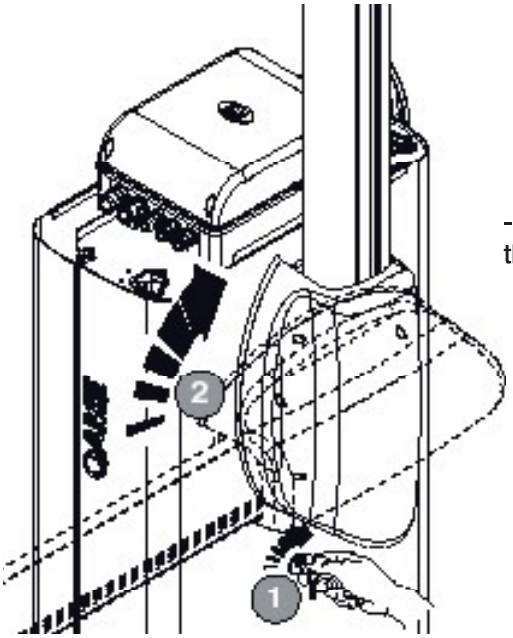

- Release the gearmotor and position the bar vertically, and then refasten the gearmotor.

- Insert the UNI5739 M12X70 screw into the spring securing bracket and tighten the UNI5588 M12 nut to the screw (1-2). Tighten the screw to spring (2) and the tie rod to the part underneath (3-4).

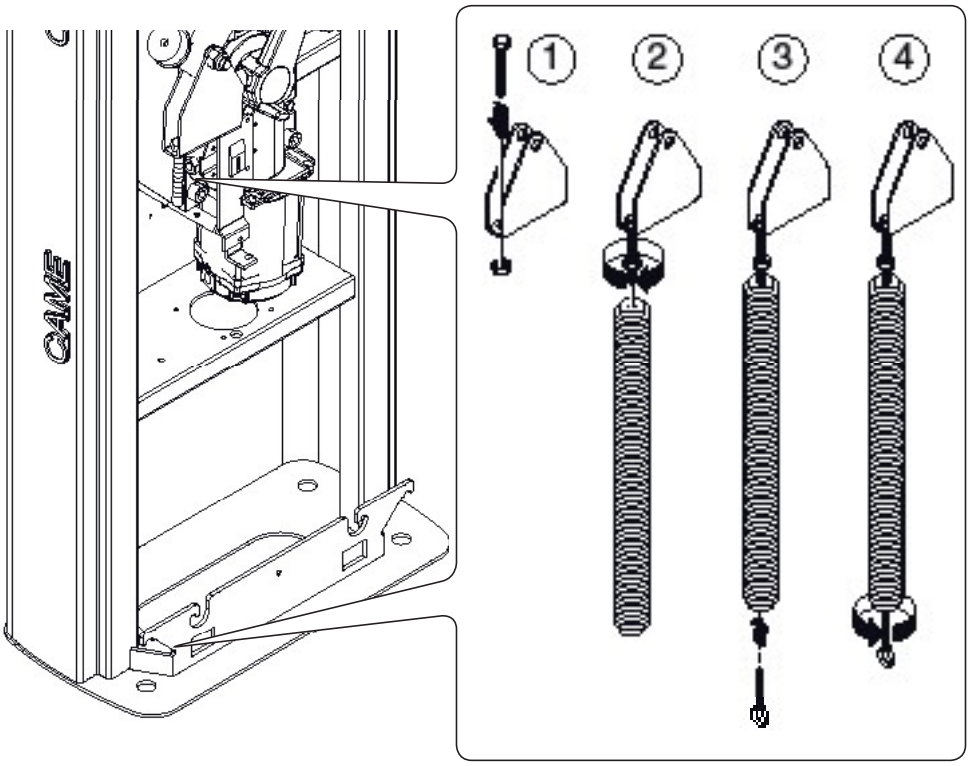

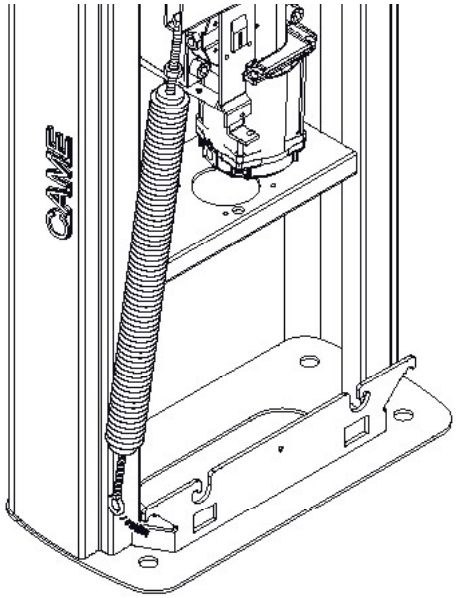

- Hook the tie rod to the anchoring racket.
Perform the same procedure if there is a second screw.

- Release the gearmotor and manually turn the spring to increase or decrease traction until the bar rests at 45°.

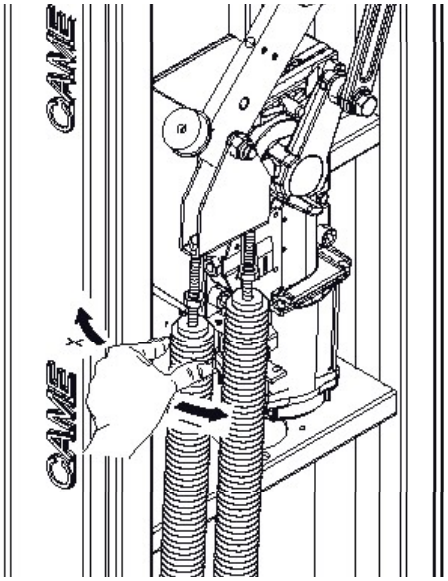

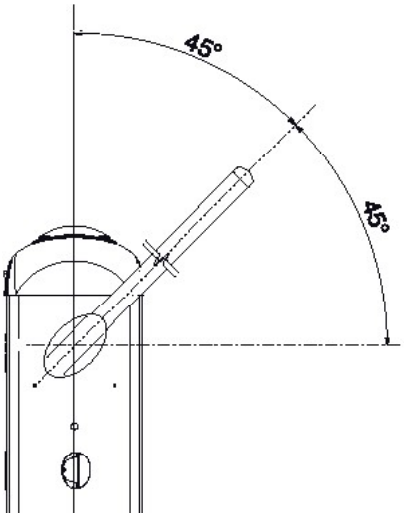

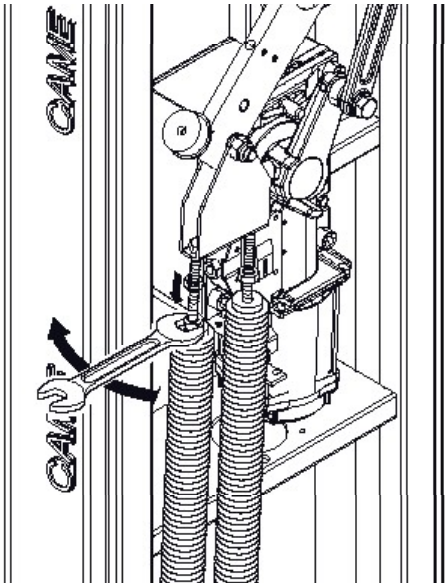

- Tighten the blocking nut and refasten the gearmotor.

Note: make sure the spring functions properly:
- the spring is loose when the bar is in the vertical position (at rest)
- the spring is tight when the bar is in the horizontal position (tense).

- Perform any electrical connections to the control panel (*see electrical connections paragraph*).

5.8 End stop adjustment

N.B.: perform this procedure after finishing the electrical connections.

Close the door and power up the system, activate the barrier to make sure it is parallel with the closed and at about 89° when open.

⚠ **Warning!** For greater safety and better unit performance, the bar's opening and closing operations should be carried out with the inspection hatch closed!

ENGLISH

If any adjustment of the vertical position (= opening) is needed, open the inspection door and rotate the free damper clockwise (to increase the bar's run) or counter-clockwise (to decrease the run).

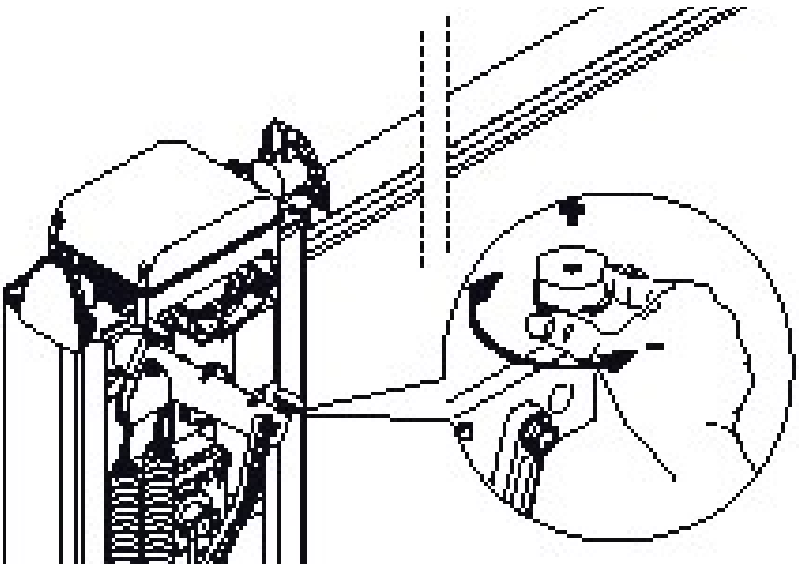

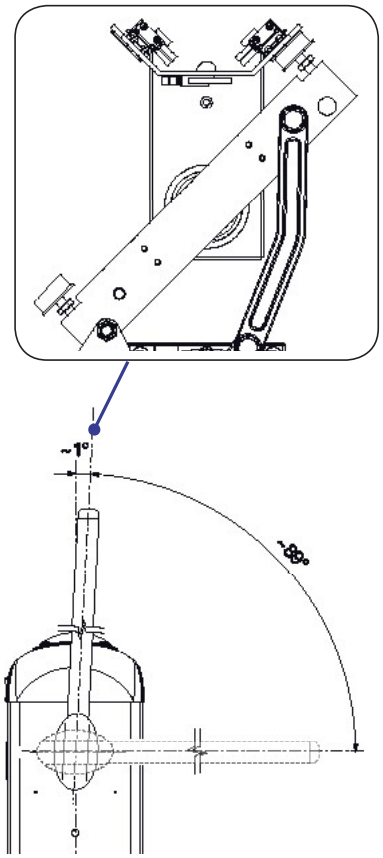

Similarly, open the bar and adjust the free damper, to regulate the horizontal position (= closing).

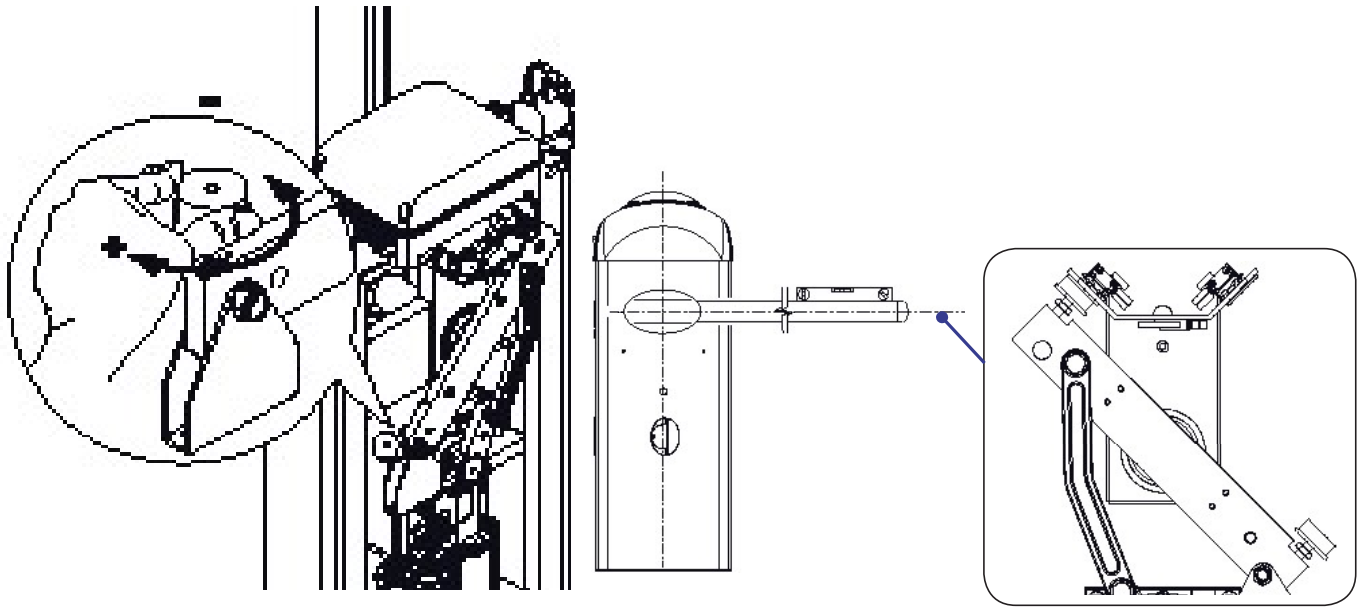

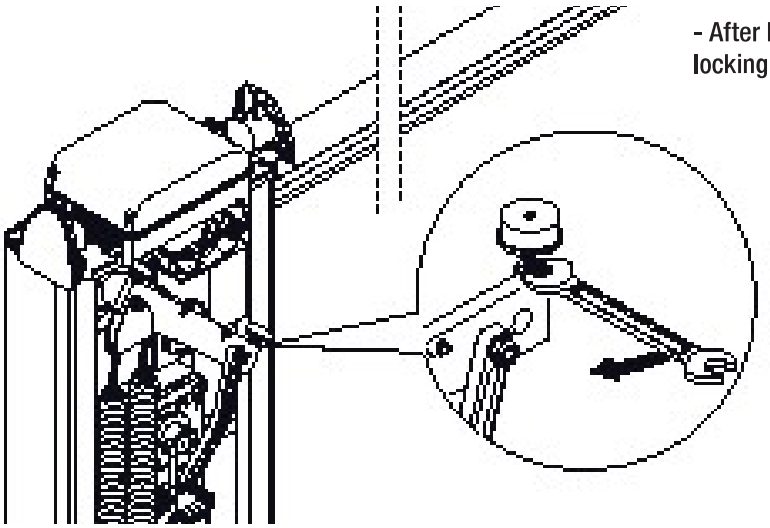

- After bar opening and closing adjustment, tighten the locking nuts under the dampers.

- After making adjustments and settings from the control panel, put the container lid in place and secure with screws....

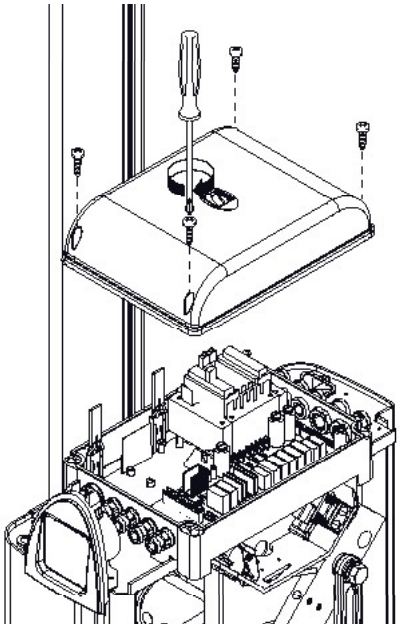

- ...place back the inspection door and the upper dome. Lock the door with the key.

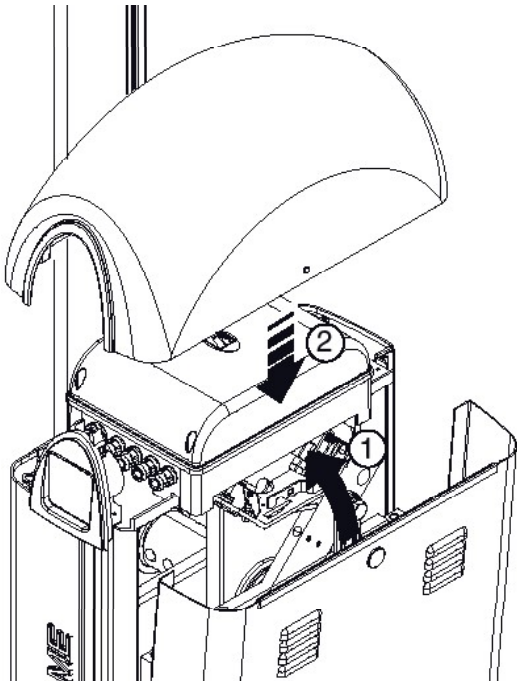

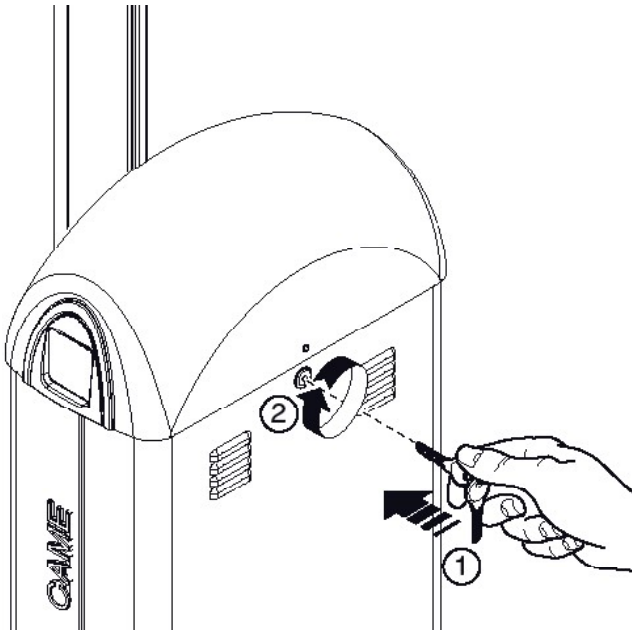

5.9 Manual release of the barrier

- Insert the key in the lock and turn it clock wise. Manually lift the bar and relock it by turning the key counterclockwise.

⚠ *WARNING! The release procedure may constitute a hazard for the user when, for whatever reason – the bar is fixed improperly to the housing during assembly, or the bar is cracked or broken in an accident, and so on – the tension springs no longer provide balance! These can thus cause a* brusque rotation of the bar attachment and/or of the bar itself.

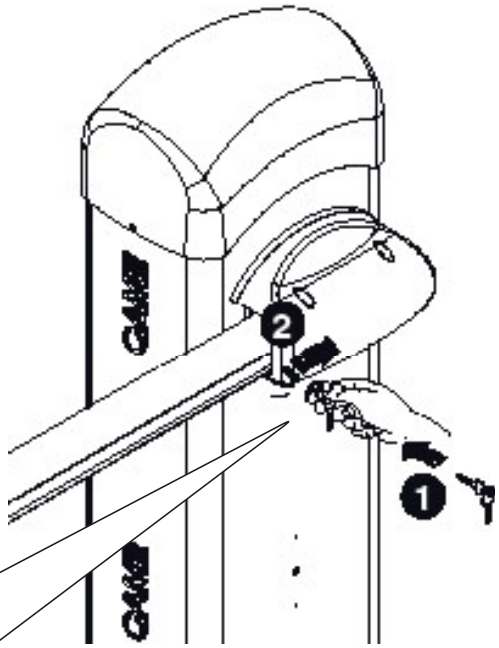

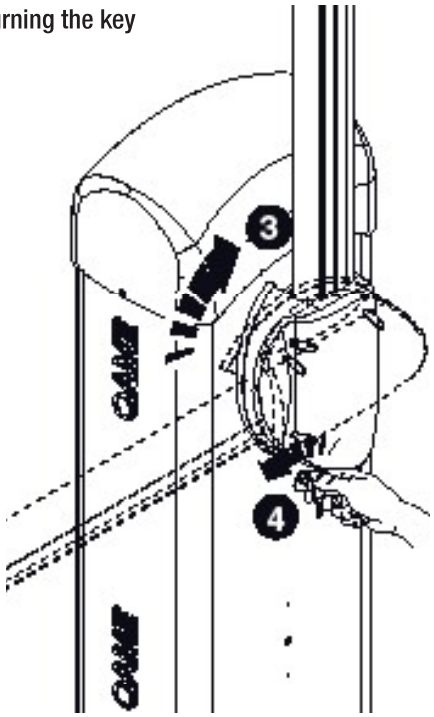

6 Description control panel

This product is engineered and manufactured by CAME cancelli automatici s.p.a. and complies with current safety regulations.

The control panel works on 230V a.c. of power, 50/60Hz frequency.

Both command and control devices and accessories are 24V powered. *Warning! Accessories must not exceed 40 W overall.*

In case the endpoint assembly does not intervene, the card nevertheless guarantees 20 seconds of operation. The card autonomously handles the Encoder (obstacle sensitive) safety function, which:
- when opening: the bar inverts the direction of travel until completely closed;
- when closing: the bar inverts the direction of travel until completely open.

Caution! *after three consecutive direction reversals, the bar will remain up and automatic closure will be discontinued. To close the gate, use the radio remote control or the push-button.*

All connections are protected by quick fuses, see table.

The card provides and controls the following functions:
- automatic closing after an open-command;
- immediate closure;
- pre-flashing by the motion indicator;
- obstacle detection when bar is still in any position.

The following command modes are possible:
- open/close;
- open/close and maintained action;
- Opening;
- Total stop.

Apposite trimmer regulate:
- the automatic closing run time;

Optional accessories:
- flashing crown and luminous band.
- bar open light marks the position of opening of the bar; it turns off after the closing operation;
- the RSE card, in order to activate the compass function or coupled through Dipswitches, see the relative technical literature.

Warning! *Before acting on the machinery, cut off the main power supply and disconnect any emergency batteries.*

TECHNICAL FEATURES	
Power supply	230 V - 50/60 Hz
max. rated power	400 W
Power draw when idling	25 W
Max power of 24V accessories	40 W
Insulation rating	II
Material	ABS
FUSES	
protection:	**fuse type:**
Electroblock	1.6 A-F
Electronic board (power supply line)	5 A-F
Accessories	2 A-F
Control devices	630 mA-F

6.1 Main components

1 - Line fuse
2 - Control unit fuse
3 - Accessories fuse
4 - Electroblock fuse
5 - Powersource Terminals
6 - Transformer Terminals
7 - Electroblock Terminals
8 - Endpoint assembly Terminals
9 - Coupled Barrier Terminals
10- Encoder Terminals
11- Connections Terminals
12- Radiofrequency Card input (see table on page 20)
13- RSE serial card input (optional for connection coupled barriers and/or compass)
14- TCA Trimmer: adjusts automatic closing time
15- Function selector Dip switch
16- Radio code storing buttons
17- Signalling LEDs for radio codes/automatic closing
18- Gate run counter
19- Motor Terminals
20- Transformer
21- Condenser

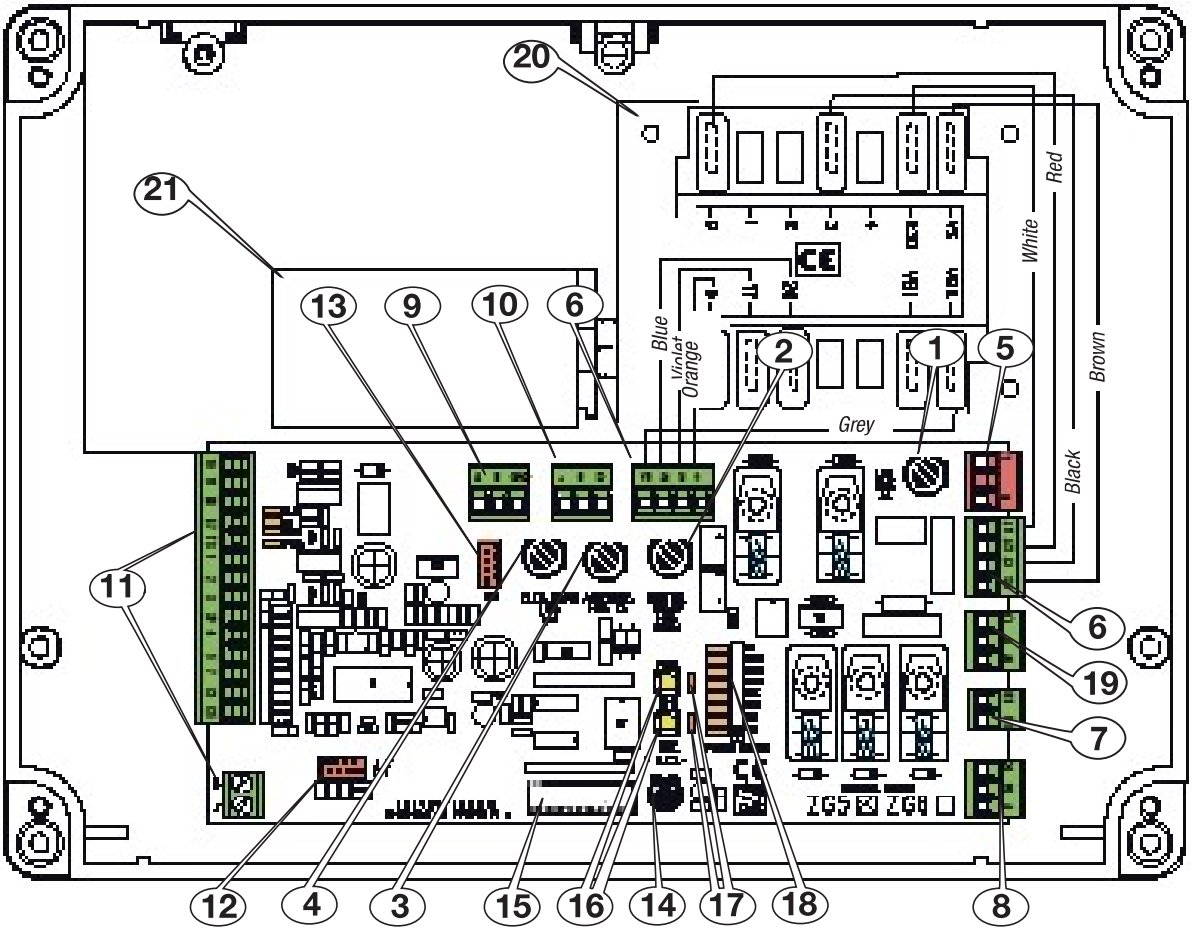

6.2 Electrical connections

Gearmotor, mechanical stops

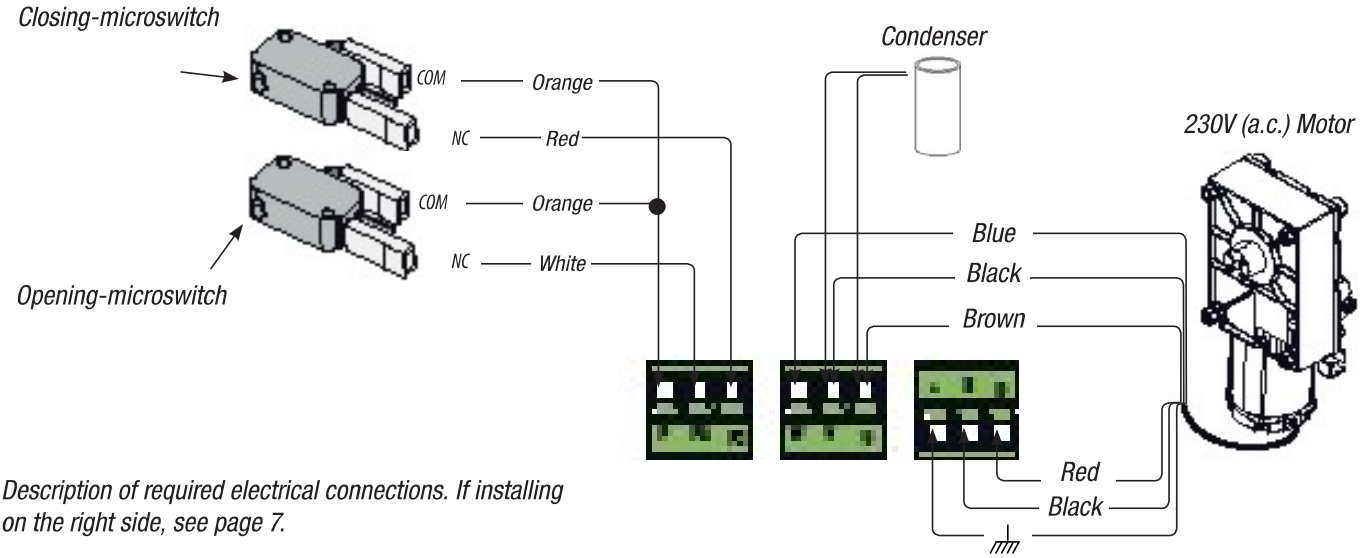

Description of required electrical connections. If installing on the right side, see page 7.

ENGLISH

ENGLISH

Power supply for accessories

- VB2 , 24V electro-block powering (pre-set connection)

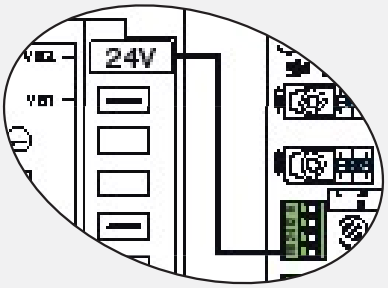

- VB1, 12V electro-block powering

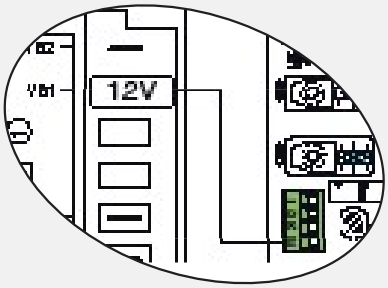

Power out socket for electroblock, activated with opening command.

Terminals for powering the following accessories:
- 24V A.C. normally;
- 24V D.C. when the emergency batteries are working;
Maximum allowed power: 40W

230V (a.c.) Power, 50/60Hz frequency

Cable lug with bolt and washer for connecting to earth

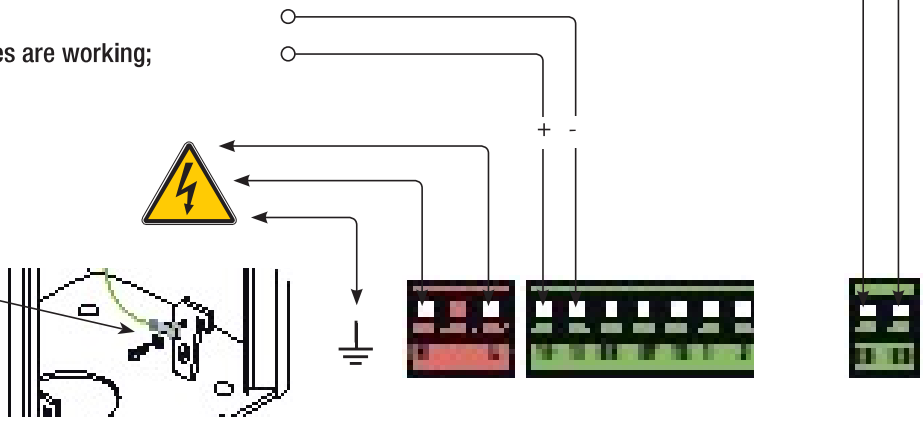

Warning devices

Open barrier warning light (contact rating: 24V – 3W max.)
– Signals when bar is in 'up' position, turns off once bar is down

Flashing Crown (Contact rating: 24V – 8W max.)
– Flashes when bar is opening and closing.

Luminous band (Contact rating: 24V-24W max.)
– Flashes when bar is closed or moving.

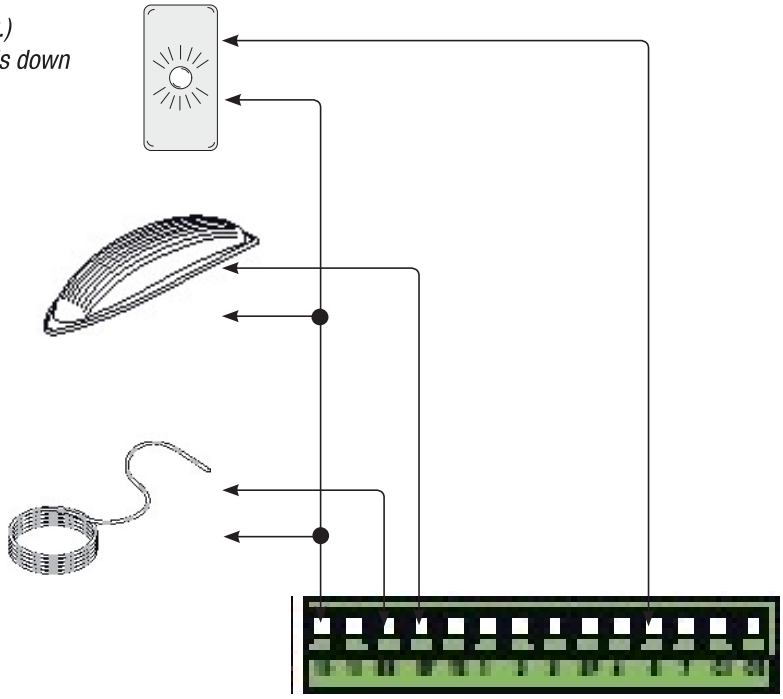

Command devices

Stop button (N.C. Contact) - Bar stop barrier.Excludes automatic closing.
For movement to resume, press the command button or transmitter button. If unused, set Dipswitch 6 to ON.

Opening button (N.O. contact) – Bar opening command.

Opening button (N.O. contact) - Opening command of the MASTER bar with coupled or compass connection.

Closing button (N.O. contact) - Bar closing command. Obligatory in case of "maintained action" function.

Command button (N.O. contact) - Bar opening and closing command. By pushing the button, the bar opens or inverts its movement depending on the selection made on Dipswitch 2.

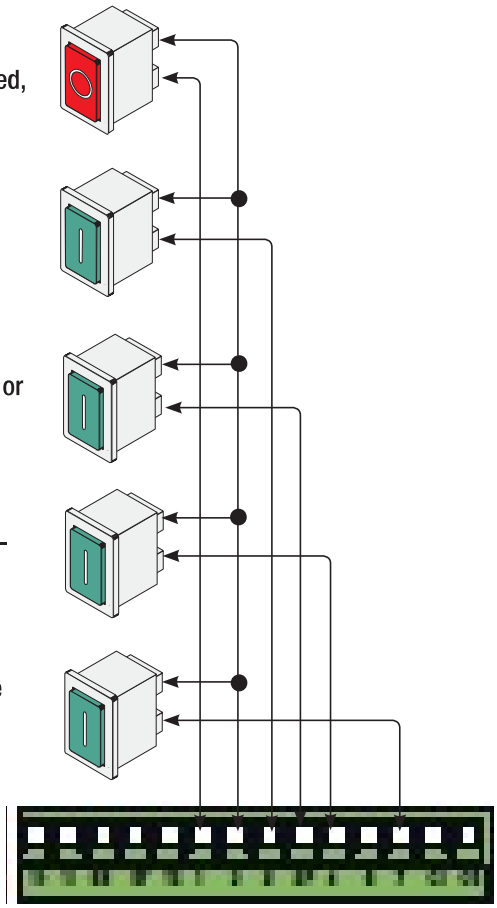

(N.O. contact) for "immediate closing"
- Automatic closing of the bar when obstacle passes in the detection range of the safety devices.

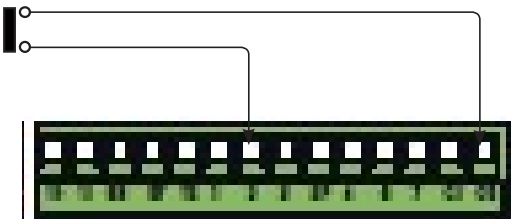

Safety devices

(N.C.) contact for *«re-open during closing phase»*
- input for safety devices such as photocells.

. If contact is opened, while bar is closing, the bar inverts its direction.

If unused, set DIP 7 switch to ON.

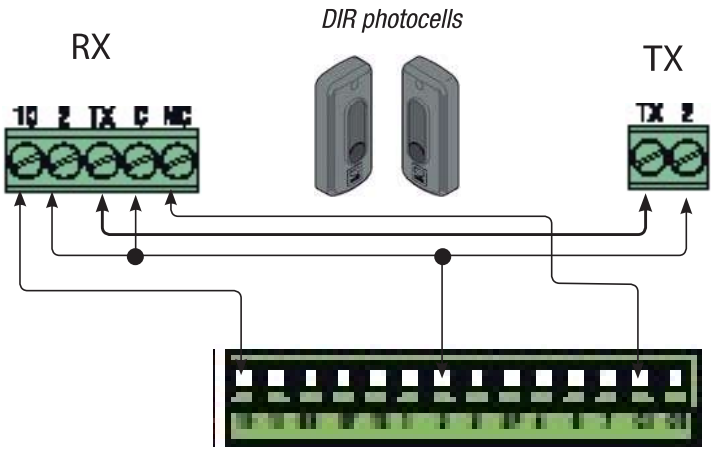

ENGLISH

6.3 Electrical connection to operate the photocells' safety test

Allows the control assembly to check the efficiency of the safety devices (photoelectric cells) after each opening or closing command. A possible photoelectric cell malfunction is identified with via LED indicator flashing on the control panel, consequently cancelling any remote control or pushbutton commands.

Electrical connection for safety test activation:

- photoelectric cell transmitters and receivers must be connected in the following way (see scheme)
- turn dip-switch 8 to ON to carry out the test.

IMPORTANT:

When carrying out the safety test function, contacts N.C. if not used, on the relative dip switches (*see "functions selection" c. 6.9*).

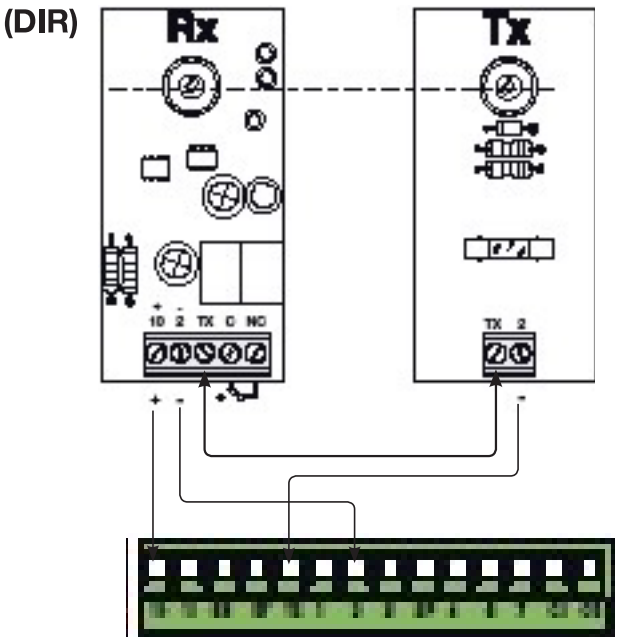

6.4 Motor torque limiter

To vary the motor torque, move the shown faston (the one with the black wire) to one of the 4 positions: 1 min – 4 max.

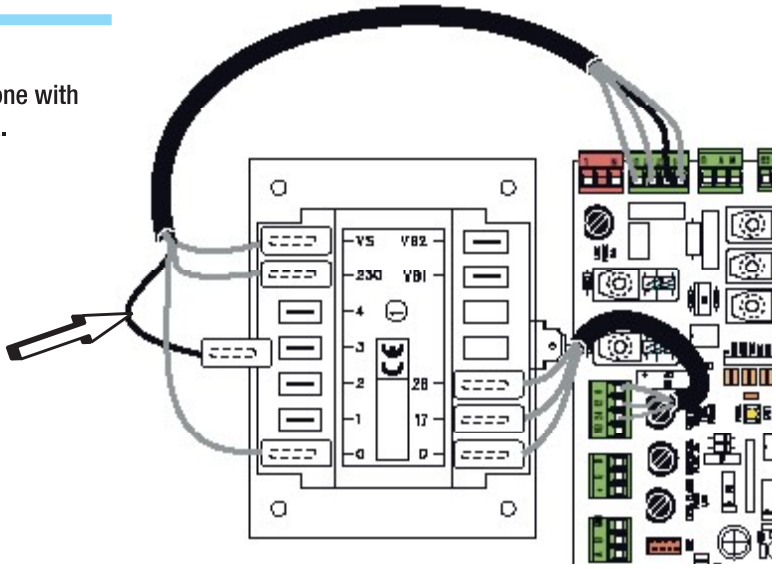

6.5 Managing operational surge

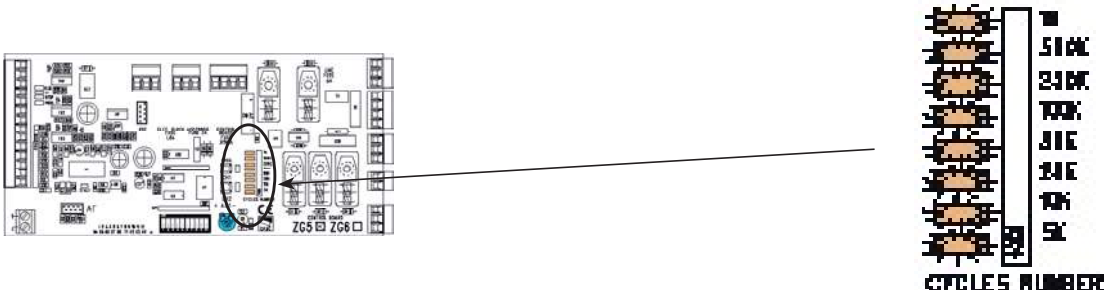

To manage the performance surge, position dip switches n. 1 and n. 3 to ON: all 8 led indicator lights on the performance counter light up.

Reset Dipswitch 3 to OFF and leave Dipswitch 1 in the ON mode, if you want to activate the automatic closing function.

6.6 Operation counter

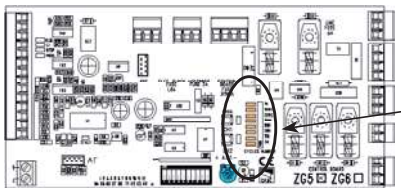

Led n°1 = 5000 operation
Led n°2 = 10000 operation
Led n°3 = 25000 operation
Led n°4 = 50000 operation
Led n°5 = 100000 operation
Led n°6 = 250000 operation
Led n°7 = 500000 operation
Led n°8 = 1000000 operation

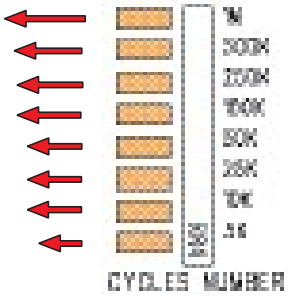

Visual count of the number of gate runs through the 8 LEDs, to zero-set the count, set Dipswitch 1 to OFF (if it is set to ON) and Dipswitch 3 to ON, press CH1 button and wait for all LEDs to turn off. Once zeroed out, reset Dipswitch 1 to ON (if selected) and Dipswitch to OFF.

6.7 Function selector

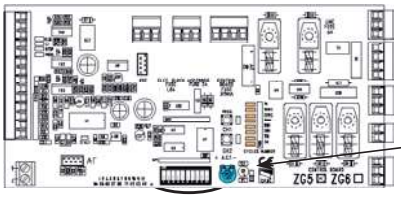

Default Setting

ON

OFF

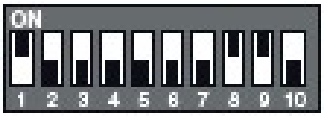

1 ON - Automatic Closing - The automatic closing timer activates at the end of the opening gate run. The pre-set time is adjustable, and is in any case conditioned by the activation of any safety devices, and does not activate after a total safety "stop" or during a blackout (1 OFF - deactivated);

2 OFF - "Open-close" function with [2-7] button and radio transmitter ((fitted with inserted radiofrequency card).

2 ON - "Open only" function with radio transmitter ((fitted with inserted radiofrequency card).

3 ON - Maintained Action – barrier works by keeping the button pressed, one button 2-3 for opening, and one 2-4 for closing (this excludes functioning of the radio transmitter).

4 ON - Pre-flashing while opening and closing – Following an opening or closing command, the flasher and/or luminous crown connected on [10-E7-/10-E6], flashes for 5 seconds before beginning its action.

5 ON - Obstacle detected - When motor is stopped (bar closed or after a total stop command) it prevents any movement if safety devices, such as photocells, detect any obstacles.

6 OFF - Total stop - This function stops the bar and consequently excludes any automatic closing cycle; to set in motion again, use either the keypad or transmitter. Insert the safety device in [1-2]; If unused, set DIP switch to ON.

7 OFF - Opening during closing - If the photocells detect an obstacle during bar is closing, gate motion is inverted until fully opened; connect the safety device to terminals [2-C1]; if unused, set DIP switch to ON;

8 ON - Functioning of the photocells' safety test - Allows the card to check the efficiency of any safety devices (i.e. photocells) after every opening or closing command; (8 OFF deactivated).

9 OFF - Encoder activated – to detect obstacles; (9 ON deactivated)

10 - If unused, set the DIP switch to OFF.

6.8 Settings

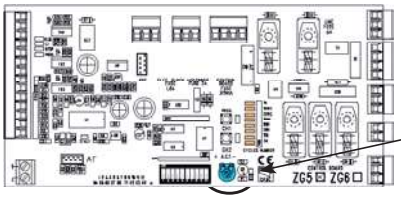

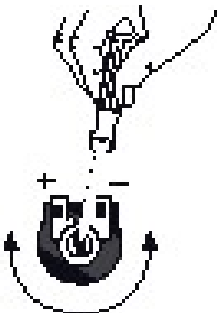

- «A.C.T.» Sets the waiting time while open. Once this time has elapsed, closing automatically takes place. The waiting time may be set from 1 to 120 seconds.

ENGLISH

7 Activating the radio command

ENGLISH

Antenna

Connect the antenna's RG58 cable to the apposite terminals.

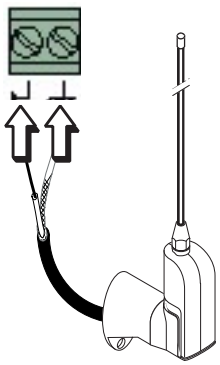

Radiofrequency card

Insert the radio frequency card into the electronic card AFTER DISCONNECTING THE POWER (and disconnecting any batteries).
N.B.: the electronic card picks up the radiofrequency card on when it is running on power.

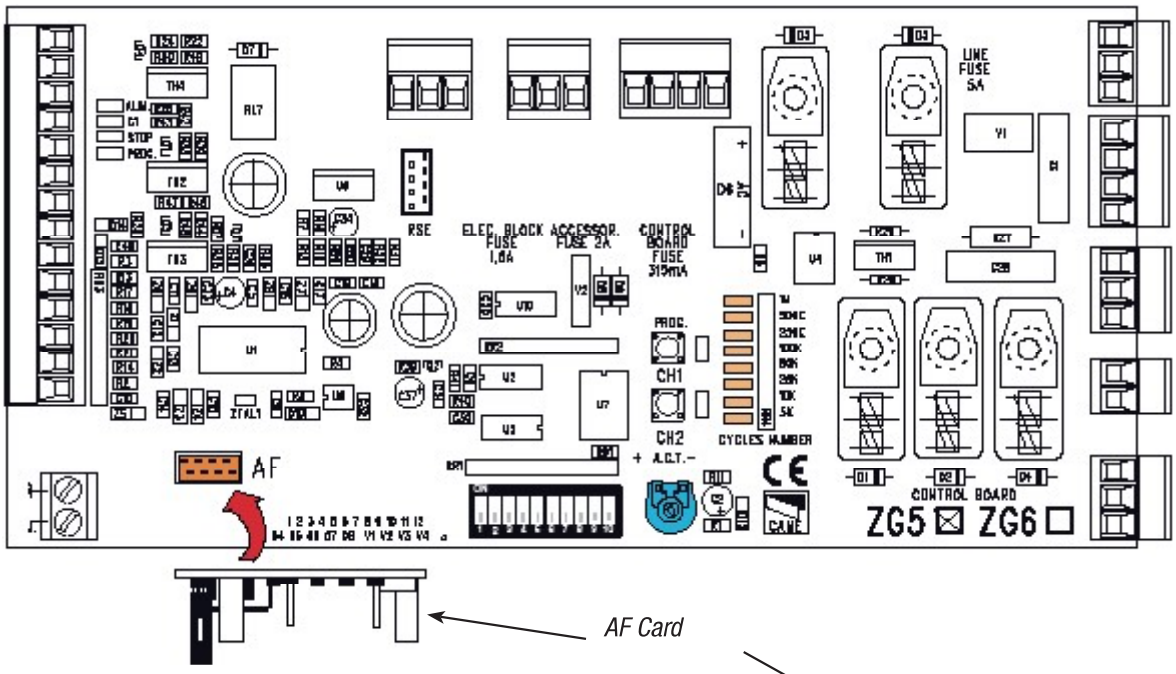

Frequency-MHz	radiofrequency card	Series of transmitters
FM 26.995	AF130	TFM
FM 30.900	AF150	TFM
AM 26.995	AF26	TOP
AM 30.900	AF30	TOP
AM 40.685	AF40	TOUCH
AM 433.92	AF43S / AF43SM	TAM / TOP
	AF43SR	ATOMO
	AF43S / AF43TW	TWIN
AM 868.35	AF868	TOP

ATOMO

AT01 • AT02
AT04

See instruction sheet in AF43SR radiofrequency card box

See attached instructions

TOUCH

TCH 4024 • TCH 4048

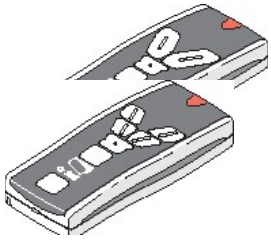

TOP

TOP-432NA • TOP-434NA
TOP-432S

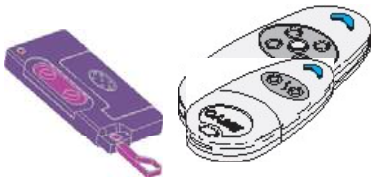

TOP

TOP-432A • TOP-434A

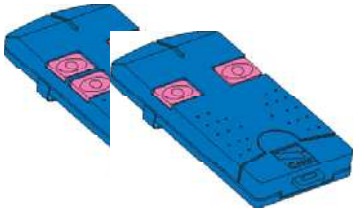

TOP

TOP-302A • TOP-304A

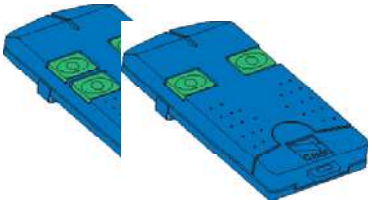

TAM

T432 • T434 • T438
TAM-432SA

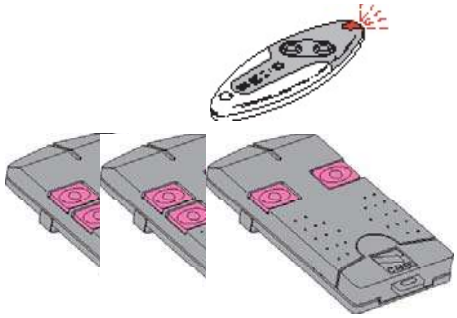

TFM

T132 • T134 • T138
T152 • T154 • T158

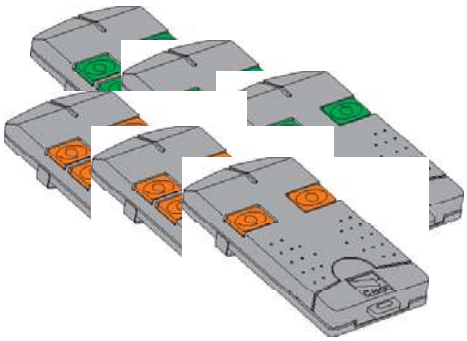

TWIN

TWIN2 • TWIN4

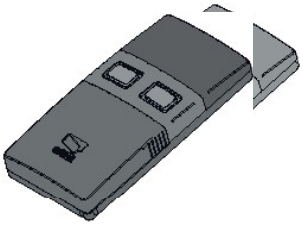

Memorisation

CH1 = Channel for direct command to a function of the the gearmotor's card, ("open only / "open-close" command, depending on the choice made on DIP switch 2).

CH2 = Channel for direct commands with an accessory device (radio control with combined barrier connection or with bush).

- Keep the "**CH1**" button on the electronic card pressed. The LED flashes.

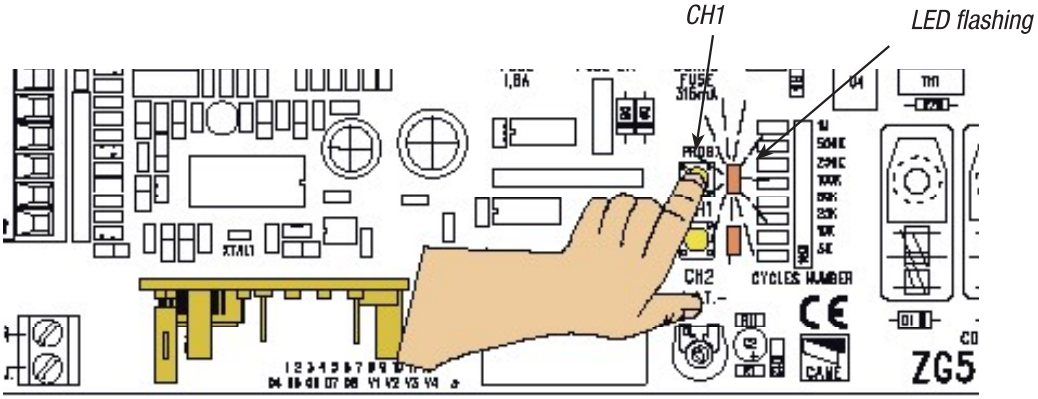

- Press the transmitter button you wish to memorise. The LED will stay on to show memorisation has been successful.

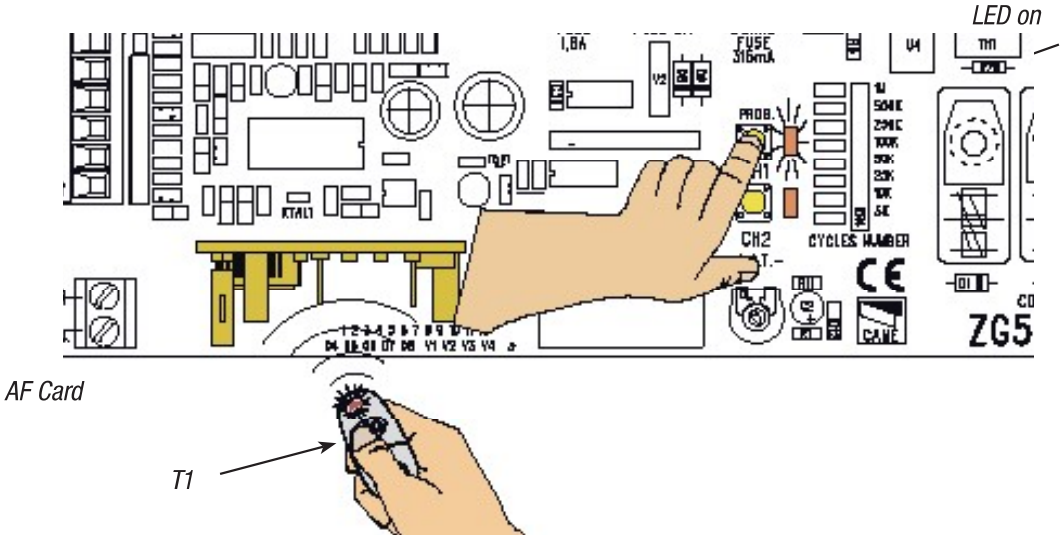

- Repeat the points 1 and 2 procedures for the "**CH2**" button associating this to another button on the transmitter.

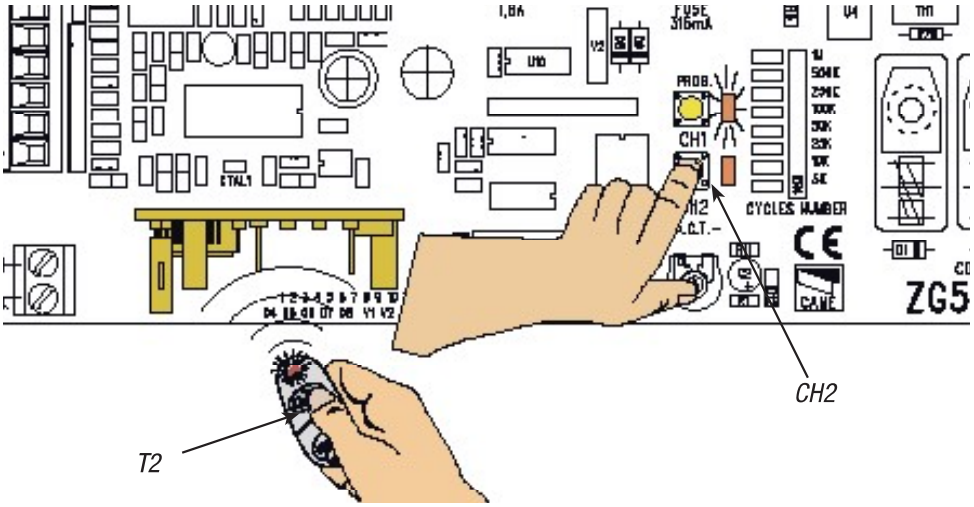

8 Safety instructions

Important safety instructions

This product must only be employed for its originally intended use. Any other use is wrong and potentially dangerous. The manufacturer cannot be held liable for any damages resulting from wrongful, erroneous or negligent uses.
Avoid using near mechanical moving parts. Stay out of the opening/closing arc when operator is in motion.
Do not exercise force against the motion of the operator as this could result in potentially dangerous situations.

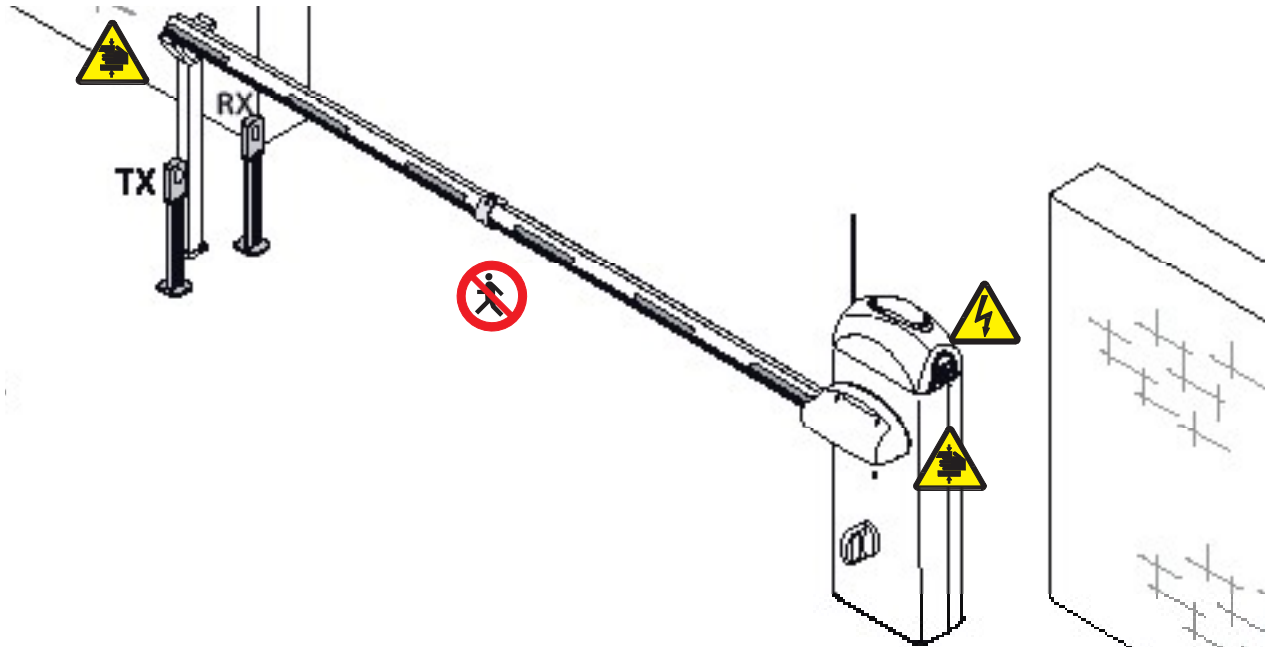

Do not allow children to play or loiter within the opening/closing arc of the operator. Keep remote controls and any other command device out the reach of children, to prevent operator from being activated by accident.
In the event of anomalous behaviour, stop using the operator immediately.

Danger of crushing hands

Danger! High voltage

No transit during operation

9 Maintenance

9.1 Periodic maintenance

Periodic maintenance to be carried out by the end-user is as follows: wipe clean the glass surface of the photocells; check that the safety devices work properly; remove any obstructions.
We suggest checking the state of lubrication and tightness of the anchoring screws on the operator.

-To check the efficiency of the safety devices, move an object in front of the photocells when gate is closing. If the operator inverts the motion or stops, the photocells are working properly.

This is the only maintenance procedure to be carried out with the power source connected.

-Before performing any maintenance procedures, cut off the main power, to prevent possible accidents due to gate movement.
-To clean the photocells use a water dampened cloth. Do not use solvents or other chemical products which may ruin the devices.
-In the event of any strange vibrations or squeaking, lubricate the joints with grease, as shown in the diagram.

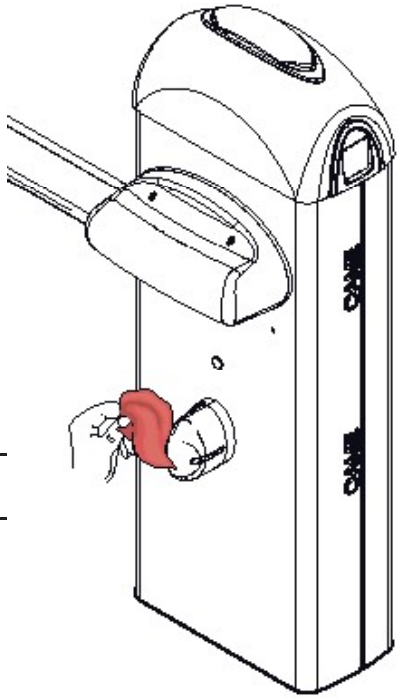

ENGLISH

Periodic maintenance log for end-user (every 6 moths)

Date	Notes	Signature

9.2 Extra-ordinary maintenance

The following table serves to note down any extraordinary maintenance, repairs or improvements performed by specialised firms.
N.B.: Any extraordinary maintenance must be performed by specialised technicians.

Extra-ordinarymaintenancelog

Installer's stamp	Operator name
	Date of job
	Technician's signature
	Requester's signature
Job performed _____	

Installer's stamp	Operator name
	Date of job
	Technician's signature
	Requester's signature
Job performed _____	

Installer's stamp	Operator name
	Date of job
	Technician's signature
	Requester's signature
Job performed _____	

Installer's stamp	Operator name
	Date of job
	Technician's signature
	Requester's signature
Job performed _____	

Installer's stamp	Operator name
	Date of job
	Technician's signature
	Requester's signature
Job performed _____	

Installer's stamp	Operator name
	Date of job
	Technician's signature
	Requester's signature
Job performed _____	

ENGLISH

9.3 Problem solving

MALFUNCTIONS	REFERENCES	CHECKS
The unit neither opens nor shuts	1-2-3-4-6-8-20	1 - Use key to lock trap door
The unit opens but does not close	4-7-10	2 - Disable “steady movement” with dipswitch
The unit shuts but does not open	4-7-9	3 – Check power supply and fuses
No automatic closure	11-12-13	4 - N.C. safety contacts open (1-2 / 2-C1)
The unit does not work if the remote control is used	2-14-16	6 - Disable master-slave function
The unit inverts direction	7	7 – Check spring tension and balancing
The unit works only with remote control	22	8 – Disable obstacle detection with dipswitch
The photoelectric cell does not react	12-23-24	9 – Check if end stop opens
The signalling LED indicator flashes rapidly	4	10 – Check if end stop closes
The signalling LED indicator remains on	13	11 - Activate “automatic closure” dip switch
The unit does not end its run	7	12 – Check the correct direction of movement
The bar is not properly balanced	7-15	13 - (2-3 / 2-4 / 2-7) command button
		14 -Check jumper on AF43S, turn on/off power
		15 – Check the bar length ratio with mountable accessories
		16 – Re-save radio code
		20 - Raise the motor torque
		22 - Enter or duplicate the same code in all the remote controls
		23 - Activate the photoelectric cell with the dipswitch
		24 - Connect the photoelectric cells in a series, not in parallel

10 Demolition and disposal

In its premises, CAME CANCELLI AUTOMATICI S.p.A. implements an Environmental Management System certified in compliance with the UNI EN ISO 14standard to ensure environmental protection.
Please continue our efforts to protect the environment—which CAME considers one of the cardinal elements in the development of its operational and market strategies—simply by observing brief recommendations as regards disposal:

DISPOSAL OF PACKAGING
I The packaging components (cardboard, plastic, etc.) are all classifiable as solid urban waste products and may be disposed of easily, keeping in mind recycling possibilities.
Prior to disposal, it is always advisable to check specific regulations in force in the place of installation.
PLEASE DISPOSE OF PROPERLY!

PRODUCT DISPOSAL
IOur products are made up of various types of materials. Most of them (aluminium, plastics, iron, electrical wires, etc.) may be disposed of in normal garbage collection bins and can be recycled by disposing of in specific recyclable material collection bins and disposal in authorized centres. Other components (electrical boards, remote control batteries, etc.), however, may contain polluting substances. They should therefore be removed and given to qualified service companies for proper disposal.
Prior to disposal, it is always advisable to check specific regulations in force in the place of disposal.
PLEASE DISPOSE OF PROPERLY!

DECLARATION OF INCORPORATION

(Annex. IIB Dir.2006/42/CE)

CAME

Came Cancelli Automatici s.p.a.

address Via Martiri della Libertà Street n. 15 postal code 31030
location Dosson di Casier province Treviso state Italia

DECLARES THAT THE PARTLY COMPLETED MACHINERY

AUTOMATIC ROAD BARRIERS

G2080Z; G2080IZ; G2081Z;
G4040Z; G4040IZ; G4041Z;
G2500; G2500N; G2510;
G3250; G3750; G3751;
G3000DX; G3000SX; G3000IDX; G3000ISX;
G4000C; G4000D; G4000E; G4000N; G4001; G4001E; G4010; G4011;
G6000; G6000B; G6000E; G6001; G6001E; G6010; G6011;
G6500; G6501;
G12000; G12000A; G12000S
G02040; G04060; G06080
G02801; G02803;
G03755DX; G03755SX

MEET THE APPLICABLE ESSENTIAL REQUIREMENTS

1.1.3 - 1.1.5 - 1.2.1 - 1.2.2 - 1.3.2 - 1.3.7 - 1.3.8.1 - 1.4.1 - 1.4.2 - 1.4.2.1 - 1.5.1 - 1.5.6 - 1.5.8 - 1.5.9 - 1.5.13 - 1.6.1 - 1.6.3 - 1.6.4 - 1.7.1 - 1.7.2 - 1.7.4

COMPLIES WITH THE PROVISIONS OF THE FOLLOWING DIRECTIVES

DIRECTIVE 2006/42/EC OF THE EUROPEAN PARLIAMENT AND OF THE COUNCIL
of 17 May 2006 on machinery, and amending Directive 95/16/EC.

DIRECTIVE 2004/108/EC OF THE EUROPEAN PARLIAMENT AND OF THE COUNCIL
of 15 December 2004 on the approximation of the laws of the Member States relating to electromagnetic compatibility.

PERSON AUTHORISED TO COMPILE THE RELEVANT TECHNICAL DOCUMENTATION

Came Cancelli Automatici s.p.a.

address Via Martiri della Libertà Street n. 15 postal code 31030
location Dosson di Casier province Treviso state Italia

The pertinent technical documentation has been drawn up in compliance with attached document IIB

Came Cancelli Automatici S.p.A., following a duly motivated request from the national authorities, undertakes to provide information related to the quasi machines,

and FORBIDS

commissioning of the above mentioned until such moment when the final machine into which they must be incorporated, has been declared compliant, if pertinent, to 2006/42/CE.

Dosson di Casier (TV)
01 Feb 2011

Gianni Michielan
Managing Director

DDI B EN **G001** *ver. 4.2 01 Febraury 2011*
Translation of the Declaration in the original language

Came Cancelli Automatici s.p.a.
Via Martiri della Libertà, 15 - 31030 Dosson di Casier - Treviso - Italy - Tel. (+39) 0422 4940 - Fax (+39) 0422 4941
info@came.it - www.came.com
Cap. Soc. 1.610.000,00 € - C.F. e P.I. 03481280265 - VAT IT 03481280265 - REA TV 275359 - Reg Imp. TV 03481280265

CAMEGROUP

English *- Manual code:* ***119GU44*** *ver.* ***0.4*** *01/2012 © CAME cancelli automatici s.p.a.*
The data and information reported in this installation manual are susceptible to change at any time and without obligation on CAME cancelli automatici s.p.a. to notify users.

CAME

CAME.COM

CAME S.P.A.
Via Martiri Della Libertà, 15
31030 Dosson di Casier - Treviso - Italy
tel. (+39) 0422 4940 - fax. (+39) 0422 4941

Manual code ***FA01075-EN*** *- ver.* ***1*** *- 01/2018 - © CAME S.p.A. - The contents of this manual may be changed at any time without prior notice.*

HIKVISION

DS-2CD7A26G0/P-IZHSWG
2 MP VF Bullet Network Camera

DarkFighter

H.265 | smart 60FPS | IP67 | WDR | 3D DNR

DeepinView

- 1/1.8” Progressive Scan CMOS
- 1920 × 1080 @ 60fps
- Color: 0.002 Lux @ (F1.2, AGC ON)
- H.265, H.265+, H.264, H.264+
- 140dB WDR
- 3D DNR
- Alarm I/O
- IP67, IK10
- 1 RS-485 interface
- IR range up to 50 m (2.8 to 12 mm)
- IR range up to 100 m (8 to 32 mm)
- Five defined streams and up to five custom streams
- 6 behavior analyses, 2 exception detection
- License Plate Recognition
- Supports alarms for listed license plate in the blacklist and whitelist
- Built-in microSD/SDHC/SDXC card slot, up to 256 GB
- Support wiegand interface of w26 and w34, is seamlessly compatible with third party access controller.

Specifications

Camera	
Image Sensor	1/1.8" Progressive Scan CMOS
Min. Illumination	Color: 0.002 Lux @ (F1.2, AGC ON), 0 Lux with IR
Shutter Speed	1 s to 1/100,000 s
Slow Shutter	Yes
Day & Night	IR Cut Filter
Digital Noise Reduction	3D DNR
WDR	140 dB
Angle Adjustment	Bracket, pan: 0° to 355°, tilt: 0° to 90°, rotate: 0° to 360°
Lens	
Focal length	2.8 to 12 mm 8 to 32 mm
Aperture	2.8 to 12 mm: F1.2 8 to 32 mm: F1.6
Focus	Auto, semi-auto, manual
FOV	2.8 to 12 mm: horizontal FOV 103.3° to 38.6°, vertical FOV 54.2° to 21.9°, diagonal FOV 124.2° to 44.3° 8 to 32 mm: horizontal FOV 42.5° to 13.4°, vertical FOV 23.4° to 7.7°, diagonal FOV 49° to 15.3°
Lens Mount	Integrated
IR	
IR Range	2.8 to 12 mm: up to 50 m 8 to 32 mm: up to 100 m
Wavelength	850 nm
Compression Standard	
Video Compression	Main stream: H.265/H.264/H.265+/H.264+ Sub stream/third stream/fourth stream/fifth stream/custom stream: H.265/H.264/MJPEG
H.264 Type	Baseline Profile/Main Profile/High Profile
H.264+	Main stream supports
H.265 Type	Main Profile
H.265+	Main stream supports
Video Bit Rate	32 Kbps to 16 Mbps
Audio Compression	No
Audio Bit Rate	No
Smart Feature-set	
Perimeter Protection	Line crossing detection, intrusion detection, region entrance detection, region exiting detection, unattended baggage detection, object removal detection
Exception Detection	Scene change detection, defocus detection
Statistics	No
Face Detection	Yes
Recognition	License Plate Recognition
Region of Interest	4 fixed regions for main stream, sub stream, third stream, fourth stream, and fifth stream, and dynamic tracking
Road Traffic and Vehicle Detection	

Accuracy (Under recommended installation and lighting conditions)	Capture rate > 98% Vehicle moving direction recognition accuracy > 96% Mistaken capture rate < 2% (entrance/exit), < 5% (checkpoint)
Blacklist and whitelist	Max. 10,000 records
No License Plate Detection	Yes
Motorcycle LPR	Yes (only applicable to checkpoint)
Image	
Max. Resolution	1920 × 1080
Main Stream	50Hz: 50fps (1920 × 1080, 1280 × 960, 1280 × 720) 60Hz: 60fps (1920 × 1080, 1280 × 960, 1280 × 720)
Sub Stream	50Hz: 25fps (704 × 576, 640 × 480) 60Hz: 30fps (704 × 480, 640 × 480)
Third Stream	50Hz: 25fps (1920 × 1080, 1280 × 960, 1280 × 720, 704 × 576, 640 × 480) 60Hz: 30fps (1920 × 1080, 1280 × 960, 1280 × 720, 704 × 480, 640 × 480)
Fourth Stream	50Hz: 25fps (1920 × 1080, 1280 × 720, 704 × 576, 640 × 480) 60Hz: 30fps (1920 × 1080, 1280 × 720, 704 × 480, 640 × 480)
Fifth Stream	50Hz: 25fps (704 × 576, 640 × 480) 60Hz: 30fps (704 × 480, 640 × 480)
Custom Stream	50Hz: 25fps (1920 × 1080, 1280 × 720, 704 × 576, 640 × 480) 60Hz: 30fps (1920 × 1080, 1280 × 720, 704 × 480, 640 × 480)
Image Enhancement	BLC, HLC, 3D DNR, Defog, EIS, lens distortion correction
Image Setting	Rotate mode, saturation, brightness, contrast, sharpness, AGC, and white balance are adjustable by client software or web browser
Target Cropping	Yes
SVC	H.264 and H.265 encoding
Day/Night Switch	Day/Night/Auto/Schedule/Triggered by Alarm In/ Triggered by video
Picture Overlay	LOGO picture can be overlaid on video with 128 × 128 24bit bmp format
Network	
Network Storage	microSD/SDHC/SDXC card (256 GB), local storage and NAS (NFS, SMB/CIFS), ANR
Alarm Trigger	Motion detection, video tampering alarm, network disconnected, IP address conflict, illegal login, HDD full, HDD error, alarm for listed license plate in the blacklist and whitelist
Protocols	TCP/IP, ICMP, HTTP, HTTPS, FTP, DHCP, DNS, DDNS, RTP, RTSP, RTCP, PPPoE, NTP, UPnP, SMTP, SNMP, IGMP, 802.1X, QoS, IPv6, UDP, Bonjour
Security Measures	Password protection, HTTPS encryption, IEEE 802.1x port-based network access control, IP address filter, basic and digest authentication for HTTP/HTTPS, WSSE and digest authentication for ONVIF
General Function	One-key reset, anti-flicker, five streams and custom stream, heartbeat, password protection, privacy mask, watermark, IP address filter
API	ONVIF (PROFILE S, PROFILE G), ISAPI, SDK
Simultaneous Live View	Up to 20 channels
User/Host	Up to 32 users. 3 user levels: administrator, operator and user
Client	iVMS-4200, Hik-Connect, iVMS-5200, Hik-Central
Web Browser	Plug-in required live view: IE8+, Chrome31.0-44, Mozilla Firefox30.0-51, Safari8.0+ Plug-in free live view: Chrome45+, Mozilla Firefox52+
Interface	
Audio	No
Communication Interface	1 RJ45 10M/100M/1000M Ethernet port, 1 RS-485 interface (half duplex, HIKVISION, Pelco-P, Pelco-D, self-adaptive)

	1 Wiegand (w26, w34)
Alarm	2 inputs, 2 outputs (up to 24 VDC 1A or 110 VAC 500 mA)
Video Output	1Vp-p composite output (75 Ω/CVBS)
On-board storage	Built-in micro SD/SDHC/SDXC slot, up to 256 GB
BNC	CVBS analog output (4CIF resolution), internal
Reset Button	Yes
Audio	
Environment Noise Filtering	No
Audio Sampling Rate	No
General	
Firmware Version	5.6.10
Operating Conditions	-40 °C to 60 °C (-40 °F to 140 °F) Humidity 95% or less (non-condensing)
Power Supply	12 VDC ± 20%, two-core terminal block PoE (802.3at, class 4)
Power Consumption and Current	12 VDC, 1.4 A, max. 16.5 W; PoE (802.3at, 42.5 V to 57 V), 0.4 A to 0.3 A
Protection Level	IP67, IK10
Heater	yes
Material	Aluminum alloy
Dimensions	Camera: Φ140 × 351 mm (Φ5.5” × 13.8”) With package: 405 × 190 × 180 mm (15.9” × 7.5” × 7.1”)
Weight	Camera: approx. 2.5 kg (5.51 lb.) With package: approx. 2.75 kg (6.06 lb.)

** Listed resolutions are only selectable options. It does not mean that all streams can work at their maximum resolution at the same time.*

Available Model

DS-2CD7A26G0/P-IZHSWG (2.8-12 mm), DS-2CD7A26G0/P-IZHSWG (8-32 mm)

**-H: Heater supported*

Dimension

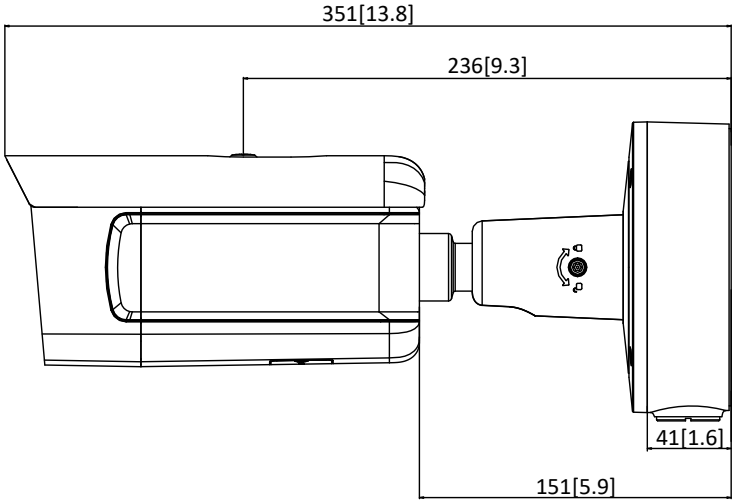

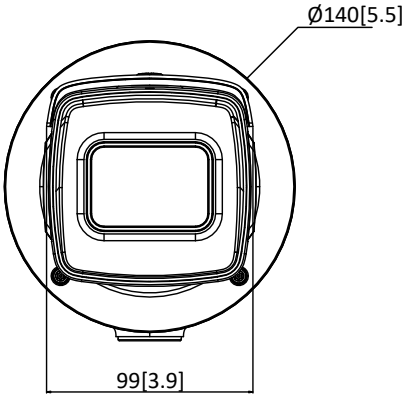

Unit: mm[inch]

Accessory

DS-1475ZJ-SUS

Vertical Pole Mount

DS-1476ZJ-SUS

Corner Mount

DS-2251ZJ

Column Mount

Distributed by

Headquarters
No.555 Qianmo Road, Binjiang District,
Hangzhou 310051, China
T +86-571-8807-5998
overseasbusiness@hikvision.com

Hikvision USA
T +1-909-895-0400
sales.usa@hikvision.com

Hikvision Europe
T +31-23-55-42-770
info.eu@hikvision.com

Hikvision Middle East
T +971-4-8816086
salesme@hikvision.com

Hikvision Russia
T +7-495-669-67-99
saleru@hikvision.com

Hikvision India
T +91-22-28469900
sales@pramahikvision.com

Hikvision Italy
T +39-0438-6902
info.it@hikvision.com

Hikvision France
T +33(0)1-85-330-450
info.fr@hikvision.com

Hikvision Spain
T +34-91-737-16-55
info.es@hikvision.com

Hikvision Poland
T +48-22-460-01-50
poland@hikvision.com

Hikvision UK
T +01628-902140
support.uk@hikvision.com

Hikvision Singapore
T +65-6684-4718
sg@hikvision.com

Hikvision Oceania
T +61-2-8599-4233
salesau@hikvision.com

Hikvision Canada
T +1-909-895-0400
sales.usa@hikvision.com

Hikvision Korea
T +82-31-731-8841
sales.korea@hikvision.com

Hikvision Brazil
T +55 11 3318-0050
Latam.support@hikvision.com

Hikvision Africa
T +27 (10) 0351172
sale.africa@hikvision.com

Hikvision Hong Kong
T +852-2151-1761

© Hikvision Digital Technology Co., Ltd. 2016 | Data subject to change without notice | 05056020190509

DS-7600NI-I2 Series NVR

Key Feature

- H.265+/H.265/H.264+/H.264 video formats
- Up to 8/16/32-ch IP camera inputs
- Up to 1-ch@32 MP/2-ch@12 MP/16-ch@1080p decoding capacity
- Up to 80/160/256 Mbps incoming bandwidth

Professional and Reliability

- H.265+ compression effectively reduces the storage space by up to 75%
- Dual-stream recording saves bandwidth
- Adopt stream over TLS encryption technology which provides more secure stream transmission service
- Support double verification for playback and downloading

HD Video Output

- Provide independent HDMI and VGA outputs
- HDMI video output at up to 4K resolution

Storage and Playback

- Up to 2 SATA interfaces for HDD connection
- 8/16-ch synchronous playback

Smart & POS Function

- Support multiple VCA (Video Content Analytics) events
- Configurable special camera smart functions, such as VCA detection (motion, line crossing, intrusion, etc.), heat map, ANPR, and people counting
- POS information overlay on live view and playback, and POS triggered recording and alarm

Network & Ethernet Access

- 1 self-adaptive 10/100/1000 Mbps Ethernet interface
- Hik-Connect & DDNS (Dynamic Domain Name System) for easy network management
- Smooth streaming technology
- Support web access without plug-in

Specification

Model	DS-7608NI-I2	DS-7616NI-I2	DS-7632NI-I2
Video and Audio			
IP video input	8-ch	16-ch	32-ch
	Up to 32 MP resolution *: After ultra HD resolution mode is enabled, the NVR supports up to 4-ch 32 MP/24 MP IP video inputs.		
Incoming bandwidth	80 Mbps	160 Mbps	256 Mbps
Outgoing bandwidth	256 Mbps		
HDMI output	4K (3840 × 2160)/60Hz, 4K (3840 × 2160)/30Hz, 1920 × 1080/60Hz, 1600 × 1200/60Hz, 1280 × 1024/60Hz, 1280 × 720/60Hz, 1024 × 768/60Hz		
VGA output	1920 × 1080/60Hz, 1280 × 1024/60Hz, 1280 × 720/60Hz, 1024 × 768/60Hz		
Video output mode	HDMI/VGA independent output		
Audio output	1-ch, RCA (Linear, 1 KΩ)		
Two-way audio input	1-ch, RCA (2.0 Vp-p, 1 KΩ, using the audio input)		
Decoding			
Decoding format	H.265+/H.265/H.264+/H.264/MPEG4		
Recording resolution	32 MP/24 MP/12 MP/8 MP/6 MP/5 MP/4 MP/3 MP/1080p/UXGA/720p/VGA /4CIF/DCIF/2CIF/CIF/QCIF *: After ultra HD resolution mode is enabled, the NVR supports up to 4-ch 32 MP/24 MP IP video inputs.		
Synchronous playback	8-ch	16-ch	
Capability	1-ch@32 MP (30 fps)/2-ch@12 MP (20 fps)/4-ch@8 MP (25 fps)/8-ch@4 MP (30 fps)/16-ch@1080p (30 fps)		
Dual stream recording	Support		
Stream type	Video, Video & Audio		
Audio compression	G.711ulaw/G.711alaw/G.722/G.726		
Network			
Remote connection	64	128	
Network protocol	TCP/IP, DHCP, IPv4, IPv6, DNS, DDNS, NTP, RTSP, SADP, SMTP, SNMP, NFS, iSCSI, ISUP, UPnP™, HTTP, HTTPS		
Network interface	1, RJ-45 10/100/1000 Mbps self-adaptive Ethernet interface		
Auxiliary Interface			
SATA	2 SATA interfaces		
Capacity	Up to 10 TB capacity for each disk		
Alarm in/out	4/1		
USB interface	Front panel: 1 × USB 2.0; Rear panel: 1 × USB 3.0		
General			
Power supply	12 VDC, 3.33 A		
Consumption (without HDD)	≤ 15 W		
Working temperature	-10 °C to 55 °C (14 °F to 131 °F)		
Working humidity	10% to 90%		
Dimension (W × D × H)	385 × 315× 52 mm (15.2" × 12.4" × 2.0")		

Weight (without HDD)	≤ 1 kg (2.2 lb)
Certification	
FCC	Part 15 Subpart B, ANSI C63.4-2014
CE	EN 55032:2015, EN 61000-3-2, EN 61000-3-3, EN 50130-4

Dimension

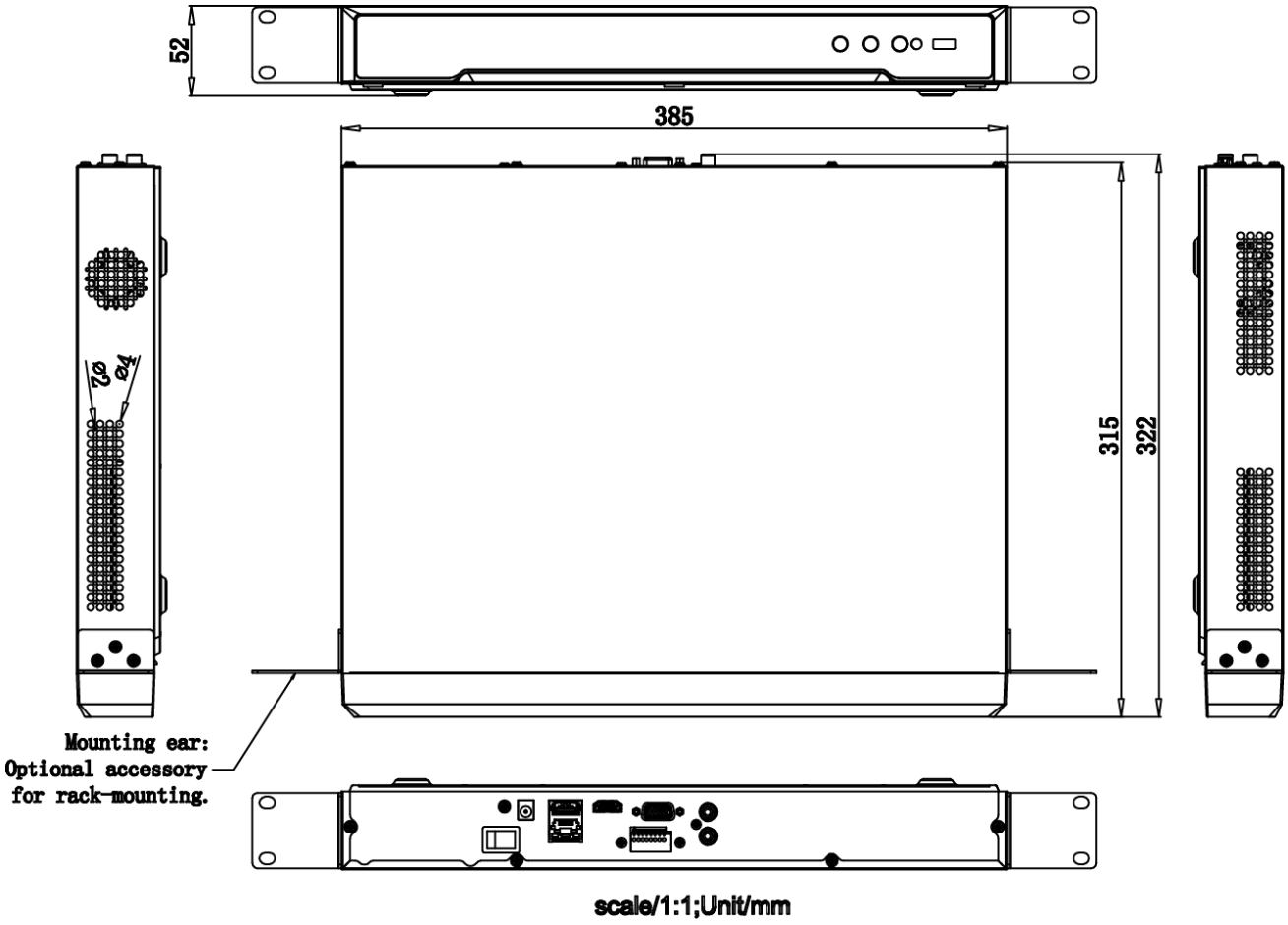
52
385
315
322
Mounting ear:
Optional accessory
for rack-mounting.
scale/1:1;Unit/mm

Physical Interface

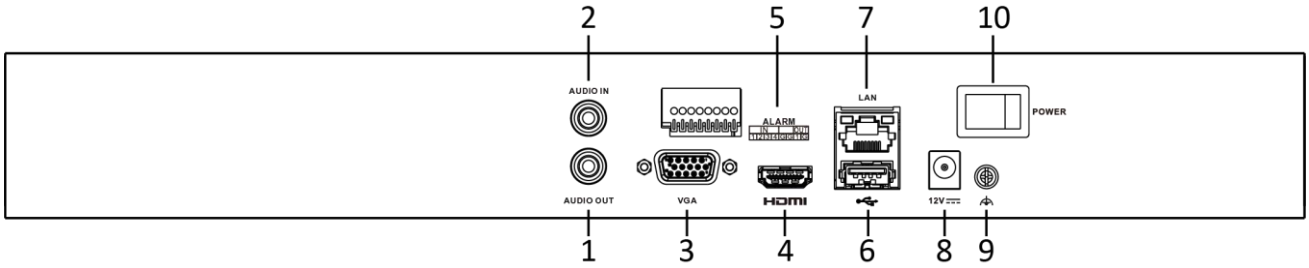

No.	Description	No.	Description
1	AUDIO OUT	6	USB Interface
2	AUDIO IN	7	LAN Interface
3	VGA Output (DB9 Connector)	8	Power Supply
4	HDMI Interface	9	GND
5	ALARM IN/OUT	10	Power Switch

Available Model

DS-7608NI-I2, DS-7616NI-I2, DS-7632NI-I2

Distributed by

Headquarters
No.555 Qianmo Road, Binjiang District,
Hangzhou 310051, China
T +86-571-8807-5998
overseasbusiness@hikvision.com

Hikvision USA
T +1-909-895-0400
sales.usa@hikvision.com

Hikvision Europe
T +31-23-5542770
sales.eu@hikvision.com

Hikvision UK & Ireland
T +01628-902140
sales.uk@hikvision.com

Hikvision UAE
T +971-4-4432090
salesme@hikvision.com

Hikvision Russia
T +7-495-669-67-99
saleru@hikvision.com

Hikvision Australia
T +61-2-8599-4233
salesau@hikvision.com

Hikvision Italy
T +39-0438-6902
info.it@hikvision.com

Hikvision South Africa
Tel: +27 (10) 0351172
sale.africa@hikvision.com

Hikvision Singapore
T +65-6684-4718
sg@hikvision.com

Hikvision Korea
T +82-(0)31-731-8817
sales.korea@hikvision.com

Hikvision India
T +91-22-28469900
sales@pramahikvision.com

Hikvision Brazil
T +55 11 3318-0050
Latam.support@hikvision.com

Hikvision France
T +33(0)1-85-330-450
info.fr@hikvision.com

Hikvision Spain
T +34-91-737-16-55
info.es@hikvision.com

Hikvision Poland
T +48-22-460-01-50
info.pl@hikvision.com

Hikvision Canada
T +1-866-200-6690
sales.canada@hikvision.com

Hikvision Turkey
T +90 (216)521 7070- 7074
sales.tr@hikvision.com

Hikvision Kazakhstan
T +7-727-9730667
nikia.panfilov@hikvision.ru

Hikvision Tashkent
T +99-87-1238-9438
uzb@hikvision.ru

Hikvision Indonesia
T +62-21-2933759
Sales.Indonesia@hikvision.com

Hikvision Thailand
T +662-275-9949
sales.thailand@hikvision.com

Hikvision Malaysia
T +601-7652-2413
sales.my@hikvision.com

Hikvision Vietnam
T +84-974270888
sales.vt@hikvision.com

Hikvision Hong Kong
T +852-2151-1761
info.hk@hikvision.com

Hikvision Colombia
sales.colombia@hikvision.com

© Hikvision Digital Technology Co., Ltd. 2020 | Data subject to change without notice |

Height range 3m - 12m

A comprehensive range of high specification poles, that cater for light, medium and heavy duty CCTV applications, therefore offering cost effective mounting solutions tailored to the individual installations requirements. A full range of accessories are available to ensure appropriate and high quality installations.

Typically used for the following types of installation

- Industrial and commercial premises
- Perimeter detection
- Schools and universities
- Railway platforms & car parks
- Car parks
- Public area CCTV
- Retail Parks
- Sports stadia

Security Features

- Internal cabling
- Close fitting flush doors
- Solid secure heavy duty door locks

General Features

- Available in 3 duties; light, medium and heavy duty to accommodate all types of camera installations
- Compartments have doors that are close fitting and flush with heavy duty secure locks and are complete with treated backboard
- Available in bolt down and embedded/direct burial versions
- A wide range of standard Altron Accessories and Brackets available
- Pole adaptations available to suit customers/project specific requirements
- Constructed in high tensile steel and hot dip galvanised after fabrication for durability
- Option of painting over the galvanised finish in colours available from BS and RAL colour charts
- Also available in 316 stainless steel, architectural finish
- For design, manufacturing and finishing standards, see details on page 107

AW1581/6

AW2207/8

AW1592/6 in stainless steel

Due to our policy of continuous product improvement specifications may change without notice

Tubular Poles

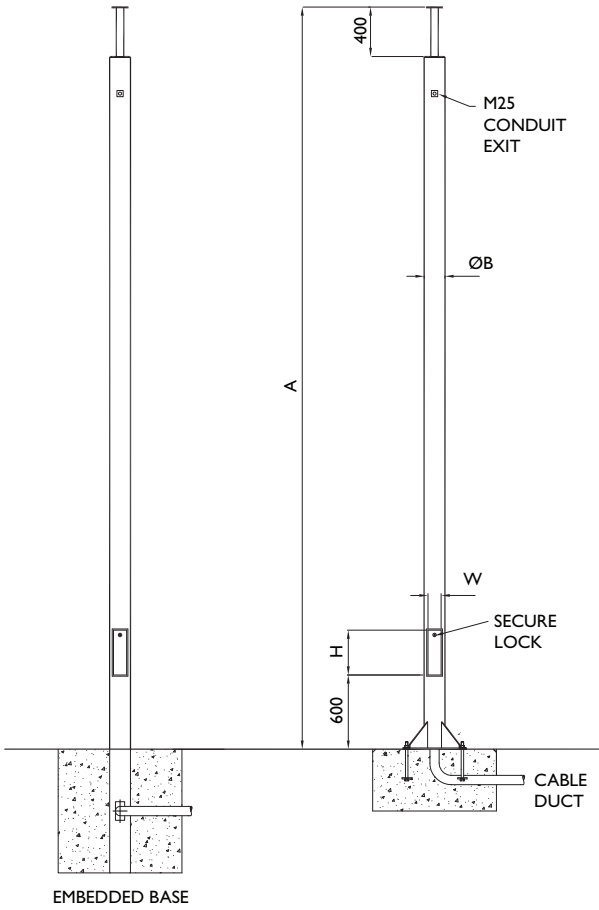

AW2207 Tapered Poles

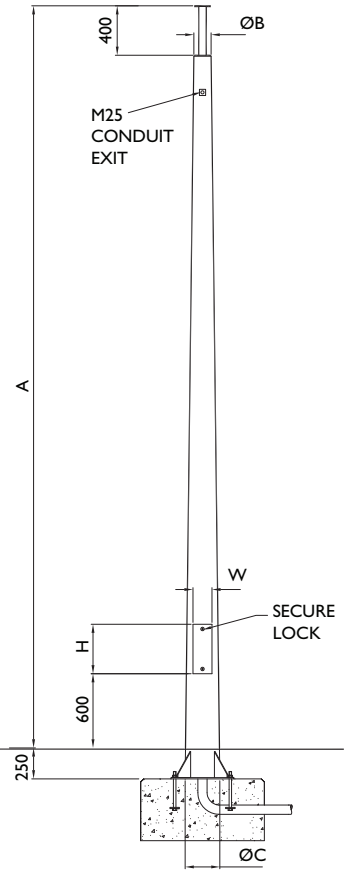

Options	PT No.
Access cover plate and cable restraining bar	/AC
Decorative banding	/B
High security locks	/HS
Screw in swan neck adaptor	/SN
Tamper switch	/TS
Double Door	/DD
Lighting spigot	/LS

All camera mounting plates are Ø 127 with 8 No Ø 8.5 equi-spaced on 101.6 PCD. Ø 40 thro' column spacer

Poles complete with treated equipment mounting board inside compartment. Earthing lugs within pole and on door

FOR FOUNDATION AND BOLTING DETAILS REFER TO PAGE 29

Model No.	Height in mtrs	Max equip weight at pole top kgs	Max equip surface area m^2	Pole ØB	Door aperture size H x W	Pole weight kgs
TUBULAR FIXED POLES						
Light duty - Typically for fixed camera and small dome installations						
AW1755/3	3	25	0.25	114	312 x 76	52
AW1755/4	4	25	0.25	114	312 x 76	63
AW1592/5	5	25	0.25	139	312 x 76	113
AW1592/6	6	25	0.25	139	312 x 76	131
AW1507/7	7	25	0.25	168	362 x 106	176
AW1507/8	8	25	0.25	168	362 x 106	208
AW1581/9	9	25	0.25	193	362 x 126	265
AW1581/10	10	25	0.25	193	362 x 126	290
Medium duty - Typically for light PTZ and larger dome installations						
AW1592/3	3	35	0.4	139	312 x 76	77
AW1592/4	4	35	0.4	139	312 x 76	95
AW1507/5	5	35	0.4	168	362 x 106	132
AW1507/6	6	35	0.4	168	362 x 106	154
AW1581/7	7	35	0.4	193	362 x 126	215
AW1581/8	8	35	0.4	193	362 x 126	240
AW1576/9	9	35	0.4	219	362 x 126	293
AW1576/10	10	35	0.4	219	362 x 126	376
Heavy duty - Typically for large fully functional PTZ, offset camera loads where min deflection is required						
AW1507/4	4	50	0.5	168	362 x 106	110
AW1581/5	5	50	0.5	193	362 x 126	165
AW1581/6	6	50	0.5	193	362 x 126	190
AW1576/7	7	50	0.5	219	362 x 126	235
AW1576/8	8	50	0.5	219	362 x 126	264
AW1631/9	9	50	0.5	273	462 x 126	418
AW1631/10	10	50	0.5	273	462 x 126	461
AW1631/12	12	50	0.5	273	462 x 126	547

TUBULAR TAPERED FIXED POLES - giving aesthetic appearance, and good rigidity

Model No.	Height in metres	Max equip weight at pole top kgs	Max equip surface area m^2	Pole Top ØB	Pole Bottom ØC	Door aperture size H x W	Pole weight kgs
AW2207/4	4	35	0.4	114	187	360 x 115	93
AW2207/5	5	35	0.4	114	198	360 x 135	124
AW2207/6	6	35	0.4	140	249	360 x 140	174
AW2207/7	7	35	0.4	140	267	360 x 160	210
AW2207/8	8	35	0.4	140	285	360 x 170	251

Where payloads are greater than those stated above, please contact Altron
All dimensions in mm unless stated otherwise

Accessories

Top mounting brackets for Fixed and PTZ cameras	P76
Swanneck brackets for Dome cameras	P81
Anti-climb guards	P77
Clamp-on camera mounting brackets	P79
Telemetry box mounting brackets	P77
Pole top mounting cages	P83
PIR mounting ring	P84

Quick reference

Single fixed camera knuckle	**PTS-1**
Twin fixed camera bracket	**TB2-600F**
Half swanneck for dome	**AW1699H**
Full swanneck for dome	**AW1699F**
Anti climb guard	**SGC**
PIR mounting ring	**AW1962**
Accessory bracket	**ATBC**

CONTACT OUR CUSTOMER
DEVELOPMENT TEAM TODAY
0370 608 4350
customer.services@churchesfire.com

ACCESS CONTROL

ACCESS CONTROL PROPOSAL

Access Control Quotation for:

Bellrock Maintenance and Engineering Services Limited
Rutland House
Wood Fold
Sheffield
West Yorkshire S3 9PE

Ref: OPP-21852
Date: 16 June 2022
Version: CFS001GILDAL

Trust Churches Fire & Security with the servicing and maintenance of your Intruder Alarm. Contact us today on **0370 608 4350** to discuss your requirements.

Churches Fire
COMPLETE FIRE & SECURITY

www.churchesfire.com

Ref Versions:
Version 1 – The original proposal submitted to the Customer
Version 2 – The proposal with any variations to the original proposal submission
Version 3 – The "As Fitted" Specification considering any installation changes.

CONTENTS

SCOPE OF WORKS	3
TENDER COST BREAKDOWN & ACCEPTANCE	4
ACCESS CONTROL DESIGN SPECIFICATION	6
PREVENTATIVE MAINTENANCE OF YOUR SYSTEM	12
CUSTOMER RESPONSIBILITIES	13
TENDER CLARIFICATIONS	15
TERMS AND CONDITIONS	17
ACCREDITATIONS	19
CONTACT US	21

SCOPE OF WORKS

SITE ADDRESS

Langstone Technology Park
Langstone Road
Havant
PO9 1SA

PROJECT BRIEF

Churches Fire Security Ltd have been invited to tender for the modification and commissioning of an Access Control system for your consideration. This being based on a physical site survey.
The Client has expressed an interest in managing traffic via a series of ANPR cameras triggering a series of external vehicle gates with management via the existing access control system.

SOLUTION

We shall supply and fit ANPR cameras with Wiegand outputs which will be connected to the existing access control system via the Client's network infrastructure which is to be provided at each location.
An option has been provided for supplying and fitted 4x camera mounting posts with camera bracketry which if accepted would be supplied and fitted by the 3rd party camera manufacturer. The camera pole manufacturer would require containment to be pre-fitted through a concrete base to which the pole can be anchored.

Based on the advised user requirements and security risk assessment conducted, the purpose of the Access Control System is designed to:Control access into the property and validate visitors before allowing entry

The proposal is based on a standalone access control/door entry system without intercom with authorised entry via a combination of access features for authorised users as detailed in the specification and integrated with other systems outside the building including gate system. The integration first fix shall be provided by others.

Please note: Should any of the determined security risks or advised user requirements change, they may affect the ability of the system to meet its design objectives. Changes therefore should be discussed with us as soon as possible.

TENDER COST BREAKDOWN & ACCEPTANCE

A cost breakdown for modifying an existing Access Control system and annual maintenance of the system can be seen below.

ITEM	INSTALLATION CHARGE	PRICE
1	To modify an existing Access Control System to comply with COP NCP-109 Issue 2 standards comprising of the following materials: 5 x Automatic Number Plate Recognition Cameras 4 x Ruggedised POE Switches 3 x Sateon Advanced Controllers c/w 2 door blades 3 x Advance Enclosure with 5 Amp PSU 3 x 6000mAH batteries 1 x 8 Channel 4K NVR c/w 3TB Hard Drive All associated cable, commission and certification	[redacted] (+VAT)
2	Option to Supply & Fit Camera Poles & Bracketry	[redacted] (+VAT)
Total Charge (+ VAT):		[redacted] (+VAT)
Deposit required (+ VAT) *(please see below):*		[redacted] *(+VAT)*

ITEM	ANNUAL MAINTENANCE CHARGE	PRICE
1	Preventative Maintenance Uplift (1x Visit Per Annum)	[redacted] (+VAT)
Deposit required (+ VAT) *(please see below):*		[redacted] *(+VAT)*

ACCEPTANCE

I/We accept the above quotation and the design specification below, along with our standard terms and conditions herewith. A copy of our terms and conditions can also be found at: www.churchesfire.com/downloads/terms-and-conditions

Signature: ..... Name: .....

For and on behalf of: ..... Date: .....

Installation Address: .....

.....

Invoice Address: .....

.....

Payees Contact details. Telephone Number: .....

Email: .....

Please return the signed ACCEPTANCE to Churches Fire Security Ltd, either by post or email along with the deposit of 30% of the total installation charge. This should be made payable to Churches Fire Security Ltd by BACS to HSBC - Account number: 91066676 Sort Code: 40-11-60. A Proforma Invoice can be raised upon request.

PRICING NOTES

Due to the current economic climate/As with all new clients with whom we do not have an extensive trading history, we respectfully request a 30% payment (+ VAT) with order before the materials can be ordered and therefore installation labour arranged. The remaining balance will be invoiced during the project.

Please note we have an estimated lead time of 10 working days from receipt of purchase order or payment of deposit invoice if applicable for materials and labour to be arranged. Please note that the annual maintenance charges are payable annually in advance.

All prices quoted are exclusive of VAT, which will be chargeable at the rate(s) applicable at the time of invoice. No allowance has been made for the Main Contractor or other such discounts.

Our current proposal and related costs are based on our best interpretation of the requirements of this project and the information made available for our consideration. However, we will be pleased to discuss and review the scope of our proposal as required, in an attempt to enhance our submission.

ACCESS CONTROL DESIGN SPECIFICATION

In accordance with the NCP 109 issue 2 code of practice, a survey and risk assessment of the said property has been carried out by a Churches Fire Security Ltd representative for the purpose of designing and installing the system and therefore based on the information provided to or determined by the surveyor at the time.

If this is an insurance requirement, you are advised to consult with your insurer in relation to this proposal and seek their agreement before accepting the quotation.

The issue and management of access rights with use of proximity tokens is controlled by the customer.

Allowance has been made for taking over the existing system or the design, supply, and commissioning of a new or modified system at the premises which comprises of:

CONTROLLED DOORS – SECURITY CLASSIFICATION

DOOR NO.	LOCATION	SECURITY RISK CLASS (1,2,3 OR 4)
1	Langstone Technology Park – North West Barrier	II
2	Langstone Technology Park – North East Barrier	II
3	Langstone Technology Park – South East Gate	II
4	Langstone Technology Park – South West Gate	II

CONTROLLED DOOR/GATE EQUIPMENT

Location No. 1

	Door Location:	Langstone Technology Park – North West Barrier				
New	Door Controller Type:	Sateon Advance Controller	Fitting Location:	Within enclosure to be supplied by Contractor. Location TBC		
New	Reader Entry Type:	Client to supply	Fitting Location:	Vehicle entrance post	Height:	1.2m
New	Camera Entry Type:	Hikvision ANPR camera	Fitting Location:	TBC	Height:	3m
New	Exit Type (Vehicle):	Gate Contractor to supply and fit. Type TBC	Fitting Location:	TBC	Height:	1.2m
New	Green Emergency Door Release Type:	Gate Contractor to supply and fit. Type TBC	Fitting Location:	Opening edge of the door in the controlled area.	Height:	1m
New	Automatic/Manual Door Closer:	Gate Contractor to supply and fit. Type TBC	Fitting by:	Enter here.		
New	Locking Type & Holding Force:	Gate Contractor to supply and fit. Type TBC	Fitting Location:	Enter here.	Fail Safe	TBC

Location No. 2

	Door Location:	Langstone Technology Park – North East Barrier				
New	Door Controller Type:	Sateon Advance Controller	Fitting Location:	Within enclosure to be supplied by Contractor Location TBC		
New	Reader Entry Type:	Client to supply	Fitting Location:	Vehicle entrance post	Height:	1.2m
New	Camera Entry Type:	Hikvision ANPR camera	Fitting Location:	TBC	Height:	3m
New	Request to Exit Type (Vehicle):	Gate Contractor to supply and fit. Type TBC	Fitting Location:	TBC	Height:	1.2m
New	Green Emergency Door Release Type:	Gate Contractor to supply and fit. Type TBC	Fitting Location:	Opening edge of the door in the controlled area.	Height:	1m
New	Automatic/Manual Door Closer:	Gate Contractor to supply and fit. Type TBC	Fitting by:	Enter here.		
New	Locking Type & Holding Force:	Gate Contractor to supply and fit. Type TBC	Fitting Location:	Enter here.	Fail Safe	TBC

Location No. 3

	Door Location:	Langstone Technology Park – South East Barrier				
N/A	Door Controller Type:	None	Fitting Location:	N/A		
N/A	Reader Entry Type:	Client to supply	Fitting Location:	Vehicle entrance post	Height:	1.2m
New	Camera Entry Type:	Hikvision ANPR camera	Fitting Location:	TBC	Height:	3m
N/A	Request to Exit Type (Vehicle):	None	Fitting Location:	N/A	Height:	1.2m
N/A	Green Emergency Door Release Type:	None	Fitting Location:	N/A	Height:	1m
N/A	Automatic/Manual Door Closer:	None	Fitting by:	N/A		
N/A	Locking Type & Holding Force:	None	Fitting Location:	N/A	Fail Safe	N/A

Location No. 4

	Door Location:	Langstone Technology Park – South West Barrier				
New	Door Controller Type:	Sateon Advance Controller	Fitting Location:	Within enclosure to be supplied by Contractor Location TBC		
New	Reader Entry Type:	Client to supply	Fitting Location:	Vehicle entrance post	Height:	1.2m
New	Camera Entry Type No.1:	Hikvision ANPR camera	Fitting Location:	TBC Facing West	Height:	3m
New	Camera Entry Type No.2:	Hikvision ANPR camera	Fitting Location:	TBC Facing East	Height:	3m
New	Request to Exit Type (Vehicle):	Gate Contractor to supply and fit. Type TBC	Fitting Location:	TBC	Height:	1.2m
New	Green Emergency Door Release Type:	Gate Contractor to supply and fit. Type TBC	Fitting Location:	Opening edge of the door in the controlled area.	Height:	1m
New	Automatic/Manual Door Closer:	Gate Contractor to supply and fit. Type TBC	Fitting by:	Enter here.		
New	Locking Type & Holding Force:	Gate Contractor to supply and fit. Type TBC	Fitting Location:	Enter here.	Fail Safe	TBC

IT NETWORK EQUIPMENT – PCs / POE SWITCHES / WIFI LINKS

NEW / EXISTING	QTY	TYPE	PUPOSE	LOCATION
New	4	Ruggedised POE Switch	Powering new IP Cameras & connecting new Controllers and cameras to Clients IT Network	Within new enclosures to be supplied by Contractor

ADDITIONAL MATERIALS / CABLE / CONSUMABLES REQUIRED

NEW/ EXISTING	QTY	TYPE	PURPOSE	LOCATION
New	3	12v 6000mAH battery	Battery back-up	Withing Each New Controller

ENTRY PANELS EQUIPMENT

NEW / EXISTING	DOOR Nos.	PANEL TYPE (AUDIO / VIDEO)	FLUSH / SURFACE	INTEGRATED KEYPAD / READER	FITTING LOCATION	HEIGHT
N/A						

INTERCOM HANDSETS

NEW / EXISTING	DOOR Nos.	HANDSET TYPE (AUDIO / VIDEO)	FLUSH / SURFACE	FITTING LOCATION	HEIGHT
N/A					

INPUT/OUTPUT UNITS (FOR FIRE INTEGRATION)

NEW / EXISTING	QTY	LOCATION	CAUSE AND EFFECT
N/A			

ACCESS CARDS / FOBS / TOKENS

NEW / EXISTING	QTY	TYPE
Existing		

Note: As the equipment is driven by mains power, please ensure a 230V non switched fused-spur is provided at the location prior to installation. This should be installed in accordance with the current wiring regulations.

MAINS POWER SUPPLIES – To be provided by Us or by the Customer

It is the responsibility of the Customer to ensure the provision of the necessary 240V non-switched fuse spur and mains supply at the locations listed below prior to the installation:

- 4x new fused Spurs to be fitted within each enclosure to power the new equipment.

HIGH LEVEL POWERED ACCESS EQUIPMENT REQUIRED FOR WORKING AT HEIGHTS

APPROX HEIGHT	TYPE OF PLANT REQUIRED	NO OF DAYS PA	HIRE CHARGE INCL	SUPPLIED BY CUSTOMER ON SITE
N/A				

EXISTING EQUIPMENT AND CABLES

All cable will be supplied and fitted by the Client's Contractor.

Churches Fire Security Ltd. cannot not accept responsibility or any liability for the performance or reliability of equipment, cabling or wiring that has not been approved, supplied or installed by us. If the need for additional work arises because additional items of equipment is required or re-cabling is necessary, then we reserves the right to charge for these over and above this design proposal.

SYSTEM COMPLIANCE

As Churches Fire Security Ltd is NSI Approved, we will provide a certificate of compliance for all security systems that meet required standards, this provides you with objective evidence that have employed a competent company operating to the relevant Industry Standards and applicable legislation.

- The ACU or Readers / Keypads should include a Buzzer which will sound if any controlled door is open for more than 10 seconds.

- Should four consecutive attempts be made to present a card that is not authorised for this access point the reader will become inoperable for five minutes and a buzzer will sound.

- The installation, commissioning and maintenance of any audio or video entry handset feature is considered to be supplementary and outside to the requirements of NCP109 and is not covered by any certificate.

- The installation, commissioning and maintenance of a gate and/or barrier is also considered to be supplementary/outside to the requirements of NCP109 and is not covered by any certificate.

- In the event of failure of any locking mechanism, respective doors will FAIL SAFE meaning 'UNLOCKED' unless specifically requested or specified otherwise.

The requirements of the Equality Act 2010 and in particular the Disability Discrimination Act 2005 section 21 apply to some areas and are detailed below.

- Readers & Entry Keypads will be mounted at a height of 0.9 meters, unless otherwise specified.

- "Request to Exit" buttons can be located inside the controlled area, on a wall or post adjacent to the opening edge of all doors, at a height of 1.5 metres unless specified otherwise. However a second button will need to be located at a height of 0.9m to satisfy requirements outlined in the DDA.

- Green "Emergency Exit" buttons will be located adjacent to the lower (0.9m) Exit Request buttons unless specified otherwise. These will be configured to disconnect the power to the lock to enable the control equipment to be over-ridden should a fault develop which prevents egress being achieved by normal means.

CLASSIFICATION OF DOORS & ACCESS POINTS

Based on the information received from the customer all controlled doors listed in the proposal have an 'Access Classification' defined, using the following reference:

Class I (low risk) access point, access should only be granted using the following:

- The input of a correct common code (or the input of a correct PIN code) of not less than 10,000 differs. 10,000 differs require a 4 digit code number such as 1234.

Class II (low to medium risk) access point, access should only be granted using the following:

- Option A - the input of a correct PIN code of not less than 1,000,000 differs, OR

- Option B - the presentation of a valid unique token to a reader. 1,000,000 differs requires a 6 digit code number such as 123456.

Class III (medium to high risk) access point, access should only be granted using the following:

- Option A - the input of a correct PIN code of not less than 10,000 differs AND the presentation of a valid unique token to a reader; OR

- Option B - the presentation of a valid biometric reader.

Class IV (high risk) At an access point, access will only be granted using the following:

- Option A - the presentation of a valid biometric reader AND the presentation of a valid unique token using radio frequency identification (RFID)*; OR

- Option B - the presentation of a valid biometric reader AND the presentation of a valid unique token to a reader AND the presentation of a correct PIN code of not less than 10,000 differs.

* RFID must not rely on recognising the Chip Serial

PREVENTATIVE MAINTENANCE OF YOUR SYSTEM

The Access Control System detailed in the above System Proposal will be maintained in accordance with the NSI NCP 109 Code of Practice. One physical preventative maintenance visit per annum has been allowed for in the Tender Breakdown of Charges.

This agreement will ensure that your system is properly maintained to the recognised Industry Standards, giving you the peace of mind with regards to reliability and efficient operation.

Our services and attention to detail will alleviate your responsibility concerned with regulations and liability, leaving you to concentrate on your business.

For systems under maintenance, call out support is ideally within 1 working day, depending on the time of the call, the next day or upon agreed appointment.

HIGH LEVEL POWERED ACCESS EQUIPMENT REQUIRED FOR WORKING AT HEIGHTS DURING THE MAINTENANCE

APPROX HEIGHT	TYPE OF PLANT REQUIRED	NO OF DAYS PA	HIRE CHARGE INCL	SUPPLIED BY CUSTOMER ON SITE
TBC	TBC	TBC	No	If neccessary

SYSTEM FAULTS AND REPAIRS

For assistance with your system please contact our customer service team on 0370 608 4350 which will divert out of hours to a duty technician.

CUSTOMER RESPONSIBILITIES

1. The customer should note that any alterations to the structure, building services, furniture or stock layout at the protected premises may adversely affect the controlled areas. In the event of any of the changes, the customer should liaise with Churches Fire Security Ltd. to allow us to re-assess the protection provided by the system.

2. It is the responsibility of the Customer to provide the 240V non-switched fuse spurs and mains supply at the locations listed above prior to the installation:

3. Our proposal is based on continuity of work. If the technician is prevented from working in a specific area, which results in loss of time and the technician is unable to continue within a different area, we reserve the right to charge for loss of time. The technician will report any issues to the customer's representative.

4. The customer is advised to consult with their IT department or third party IT support company before accepting our quotation, and prior to the installation, commissioning or takeover of an IP related security system.

5. Mitigating Local Network Breach – It is advised where a networked security (Access Control) system is using the customer's IP infrastructure that a suitable VLAN, Firewall or other method of virtual or physical segregation be implemented. Churches Fire Security Ltd can provide a quotation for installing a separate infrastructure for networked systems including dedicated network port from the NVR to the cameras to negate this risk.

6. Mitigating Cyber Security Risk – It is advised where a networked security (Access Control) system is connected to another network for the purpose of viewing and accessing the system remotely, that suitable barriers are implemented to restrict access to authorised personnel only. All user access to the system should be via complex passwords only and the customer is advised to consult with their IT department or third part support company prior to the installation, commissioning or takeover of an IP related security system.

7. Where the customer uses a PC or laptop to connect to the Access Control Operating System, the customer must provide the technician with access to the software to enable any changes to the configuration and settings. Customers are also strongly advised to use complex passwords, gestures or biometrics to restrict unauthorised access.

8. Broadband Changes - should you change Broadband/IP address provider or your existing provider makes changes to your existing setup, a subsequent engineering visit will be required to re-configure the equipment, this may be charged as a callout.

9. It is client's responsibility to ensure that any wifi boosters/extenders are kept plugged into mains socket and remain switched on. Any technician callout relating to these units not working due loss of electrical/Internet supply may be chargeable.

10. The customer will need to be available for final handover of the system and is responsible for ensuring all staff are present for training of use of the system. We are able to return on separate occasions for training needs, however there may be an additional charge for this service.

11. For security system takeovers (initial visit) it is strongly recommended that all Engineer Intruder Alarm codes are defaulted by the current incumbent to the manufacturers default codes prior to the takeover visit. This will ensure efficiency, reduced time and costs on the first visit.

12. Regarding installation works; the customer is responsible for informing Churches Fire Security Ltd and the attending technician, prior to commencement of the works, of any changes to the property or conditions which may affect the works being undertaken, or may affect the design of the system.

13. Note that in some cases our technicians will be attending site alone. Where there is limited phone signal, the customer shall be required to assist in maintaining the safety of a lone worker.

14. Our quote does not include for the lifting of carpets, tiles and ceilings or for the moving of equipment machinery plant or stock. No allowance has been allowed for waiting time for reasons beyond our control.

15. It is the customer's responsibility to comply with the Data Protection Act 1998 and the new General Data Protection Regulation relating to the correct use and the collection and management of data.

16. As part of our approvals, our respective inspection body may need to accompany a Churches Fire Security Ltd representative to you premises to inspect the system. Your co-operation and assistance with this would be much appreciated.

17. Effective access control systems rely on suitable door hardware and efficient closing mechanisms. We accept no responsibility for unauthorised entry gained due to ineffective or failed doors or door hardware.

18. Other customer responsibilities relevant to this project:

Client or Client's contractor is to provide the following:

- Suitable enclosure for mounting equipment at each of the 4 locations
- Suitable main power supply within new enclosure at each of the following location.
- Suitable Network Connection to Client's network infrastructure at each location. (The Network connection must be suitable for providing access to existing controllers and software.
- A suitable location for the networked video recorder (NVR).
- All civil works.
- All new access control readers and reader vehicle mounting posts.

TENDER CLARIFICATIONS

GENERAL INCLUSIONS

1. Free site survey and consultation.

2. All Risk Assessments and Method Statements can be provided upon request – these are reviewed continuously throughout the project. All Permits to Work Systems will be adhered to and should any issues arise during the project they will be reported immediately to the sites representative.

3. All works are undertaken by our technicians who are professional and competent, with the qualifications, training and experience required. They will attend the designated site(s) with the correct tools, equipment, manuals and knowledge necessary, and as required by law. All staff are BS7858 vetted, DBS checked and carry photographic ID.

4. Access equipment for all areas – powered access equipment (e.g. Cherry Pickers and alloy towers have not been included unless otherwise agreed in writing.

5. One copy of any Operation and Maintenance (O&M) Manual, complete with a copy of the 'As Fitted' drawings will be provided upon completion.

6. One visit for the purposes of staff training to the end user to cover the basic testing of the system has been included.

7. To manage your Access Control System our technician can assist you with setting up the software application at the time of installation. Should access to the customers PC equipment not be available at the time of installation, return visits or waiting time for software setup will be charged for accordingly. Any costs incurred for downloading mobile applications is the responsibility of the customer.

8. We have assumed good and clear access to the work area, and fair continuity of work.

9. At no cost to Churches Fire Security Ltd, the site must provide:
   - Staff welfare facilities
   - Lighting and power for installation works (max. 20m extension cables allowed)
   - Rubbish removal, except to site central skip facility provided by others
   - Secure space for storage of materials and site office accommodation where necessary
   - Safe access to efficiently offload materials and equipment
   - General site security

GENERAL EXCLUSIONS

1. Builder's work includes (but is not limited to): demolition, bases, forming and making good of holes through walls, floors, ceilings. bracketry within ducts etc. will be the responsibility of others.

2. Churches Fire Security Ltd. can confirm that any civil works required for this design proposal are to be the responsibility of others. This includes Catenary Wire, Ducting/Draw Wires, Trenches, and Concrete Bases etc.

3. Fire stopping around wall/floor penetrations.

4. Consultancy or design work in respect of statutory or local regulations including Planning Application, etc.

5. Any other trade's or discipline's work not expressly included elsewhere in our submission document or quotation.

6. Performance Bond or Bank Guarantee.

7. Costs for power, water, etc. associated with installing, testing, commissioning systems. Such requirements should be provided free of charge by others.

8. Employment of a specialist commissioning company or personnel to undertake the interfacing, testing or commissioning of the installations.

9. All spares and consumables (unless specifically agreed).

10. The customer is responsible and liable for supplying, maintaining and repairing their own IT equipment, broadband supply, routers, network switches, LAN/WAN interfacing, servers & IP network infrastructure used in conjunction with the CCTV equipment. We do not provide IT services or any equipment (i.e. PC, laptop, tablet, iPad) to view the images.

TERMS AND CONDITIONS

We require an official written order or signed agreement, confirming any purchase order number, name and address of whom to invoice along with payee contact details, to enable us to mobilise the works.

Please allow at least two to four weeks from receipt of approval for delivery of all labour and materials.

The commercial basis of our tender quotation includes:

1. The deposit must be paid before an installation date can be agreed.

2. Supervision of our work on site by a Project Surveyor, together with visits by our Project Technician as reasonably necessary to attend meetings and manage/monitor the work.

3. Good and clear access being available to our work areas and reasonable continuity of work within an agreed programme.

4. Work is to be undertaken during normal working hours (08.00 until 17.00) to an agreed programme. We will require free undisrupted access to the site from 08.00 until 17.00. If works are required outside of 08.00-17.00 it will be charged at an additional cost.

5. Any day work required due to delays beyond our control i.e. aborted visits will be charged at our standard daily labour rates.

6. For all orders cancelled 14 days or less before works commencing will be subjected to a restocking fee for any equipment that has been ordered as passed to us by the manufacturer, including any costs incurred with the hire of specialist access equipment. These fees apply to a complete cancellation of works only, if works are to be reschedule this will not apply. If the works are to be rearranged 48 hours or less than an aborted visit charge will apply.

7. Before any works are undertaken the customer must supply us any site information relating to the known location of any type of Asbestos, this may be by the means of an Asbestos Register. Should work cease or a change is required to routes due to the discovery of asbestos in the building, unless otherwise instructed prior to work commencing, additional cost may be incurred.

8. All our representatives and operatives have strict instructions not to undertake any additional or variation works unless in receipt of written instructions from yourselves. Such variations or unpriced works will be charged for following your acceptance of our supplementary quotation.

9. This quotation is valid for 30 days from our tender date, after which we reserve the right to review and/or adjust our quotation.

10. Prices are based on payments being settled within 30 days of submission – these do not include deductions which have not been agreed.

11. We reserve the right to apply for monthly interim payments if the project is to be in excess of 45 days. Churches Fire Security Ltd will submit an application for payment, and cost plan if required, for the amount being invoiced. Standard payment terms will apply.

12. All equipment and parts supplied remain the property of Churches Fire Security Ltd, until full payment of the invoice to which they relate is received.

13. All goods supplied and installed by Churches Fire Security Ltd are covered by warranty for 12 months from the date of delivery with the exception of batteries, providing such repairs are attributable to component failure and subject to ongoing service and maintenance being carried out by Churches Fire Security Ltd. This undertaking specifically excludes damage due to lightning, electrical interference or wilful damage. Labour will be chargeable and agreed in advance of the required works. This guarantee only applies to equipment supplied and fitted from new. No guarantees are given on equipment including cabling that is taken over on existing systems.

14. This tender is submitted on the basis that any contract(s) will be subject to final agreement between us and will incorporate terms and conditions compliant with the 'The Construction Act' 1996.

Our full company terms and conditions can be found on our website at https://www.churchesfire.com/downloads/terms-and-conditions/

ACCREDITATIONS

LPCB – Loss Prevention Certification Board (Level 3, Assessed to ISO 9001:2015, L1048 Cert.)

Third-Party approval (or certification) is a conformity assessment process, carried out by a body that is independent of both supplier and customer organisations.
A frequent concern of stakeholders is in knowing whether a service will be delivered in accordance with the stated specifications. These concerns can involve such service attributes as safety, health or environmental impacts, durability, compatibility, suitability for intended purposes or for stated conditions, and other similar considerations. These issues will all be addressed through LPCB product approvals, thus ensuring you are getting the best standards in the industry when using an accredited company like Churches Fire & Security. We are LPCB Level 3 Accredited.

BAFE – British Approvals (SP101, SP205 and SP203-1)

BAFE is the independent third-party registration body for the fire protection industry. It brings to the marketplace a registration scheme for each product or service within the industry for which third party certification has been considered appropriate. All BAFE schemes are approved to ISO 9001 or equivalent and provide a published technical prescription to which organisations, products and services can be independently assessed. Life Safety Fire Risk Assessment SP205 specifies that organisations have the required technical and quality management capabilities and fire risk assessment staff meet the appropriate criteria.

FIA – Fire Industry Association

The FIA is a not-for-profit trade association which promotes the professional status of the UK fire safety industry. It is the result of a merger between FETA (Fire Extinguishing Trade Association) and BFPSA (British Fire Protection Systems Association), two long standing and respected trade associations. One of our senior fire safety team sits on the association's Fire Risk Assessment Council.

CHAS – Contractors Health and Safety Assessment Scheme

CHAS is a national database of contractors who have completed a Health and Safety assessment and demonstrated adequate compliance and management standards. This enables them to work on local authority as well as other members' contracts, subject to approval of other checks such as financial integrity.
The scheme has two main aims:

- To improve Health and Safety in small to medium sized businesses
- To reduce the need for repeated completion of Health and Safety forms when applying to members' approved lists or tenders.

CHAS client membership consists of local authorities, housing associations, NHS trusts, major contractors and blue chip companies nationwide. Once a contractor has been assessed and approved with one member, they can be accepted by any other signed up to CHAS.

SafeContractor

SafeContractor is an accreditation scheme that assesses the health and safety competency of contractors and service providers. Customers have a legal obligation to ensure that external contractors and service providers working on their premises operate in a safe way. There is therefore a need to assess contractor's health and safety arrangements and increasingly this is being carried out through SafeContractor, with many large organisations using it as their primary selection criterion.

NICEIC – National Inspection Council for Electrical Installation Contracting

NICEIC provides assessment and certification services for contractors operating in building services. Churches Fire & Security are registered under the Approved Contractor Scheme for Fire Detection and Alarm Installations and Emergency Lighting Installations.

Constructionline (Gold Member)

Constructionline is the UK register of pre-qualified construction services. Our membership makes it unnecessary for prospective customers to carry out the traditional vetting processes, and for prospective suppliers to check our credentials elsewhere. It saves all parties time, cost and resource.

NSI NACOSS Gold, Life Safety Fire Risk Assessment and NSI Fire Gold

The National Security Inspectorate (NSI) is the UK's most highly trusted and respected, independent, UKAS-accredited certification body in the security and fire safety sector. NSI promotes the highest standards of service, quality and continual improvement, and inclusion in their register demonstrates our dedication to excellent standards. Churches Fire & Security hold certification for Fire Risk Assessment and the design, installation and maintenance of Fire Detection and Alarm Systems, Intruder Alarms, Access Control and CCTV Systems.

CONTACT US

If you would like more information or to discuss your fire and security needs, please visit www.churchesfire.com or contact us on 0370 608 4350.

Churches Fire
COMPLETE FIRE & SECURITY

Churches Fire Security Ltd, Fire House,
Mayflower Close, Chandlers Ford, SO53 4AR

0370 608 4350

customer.services@churchesfire.com

www.churchesfire.com

Appendix B

Barrier Locations

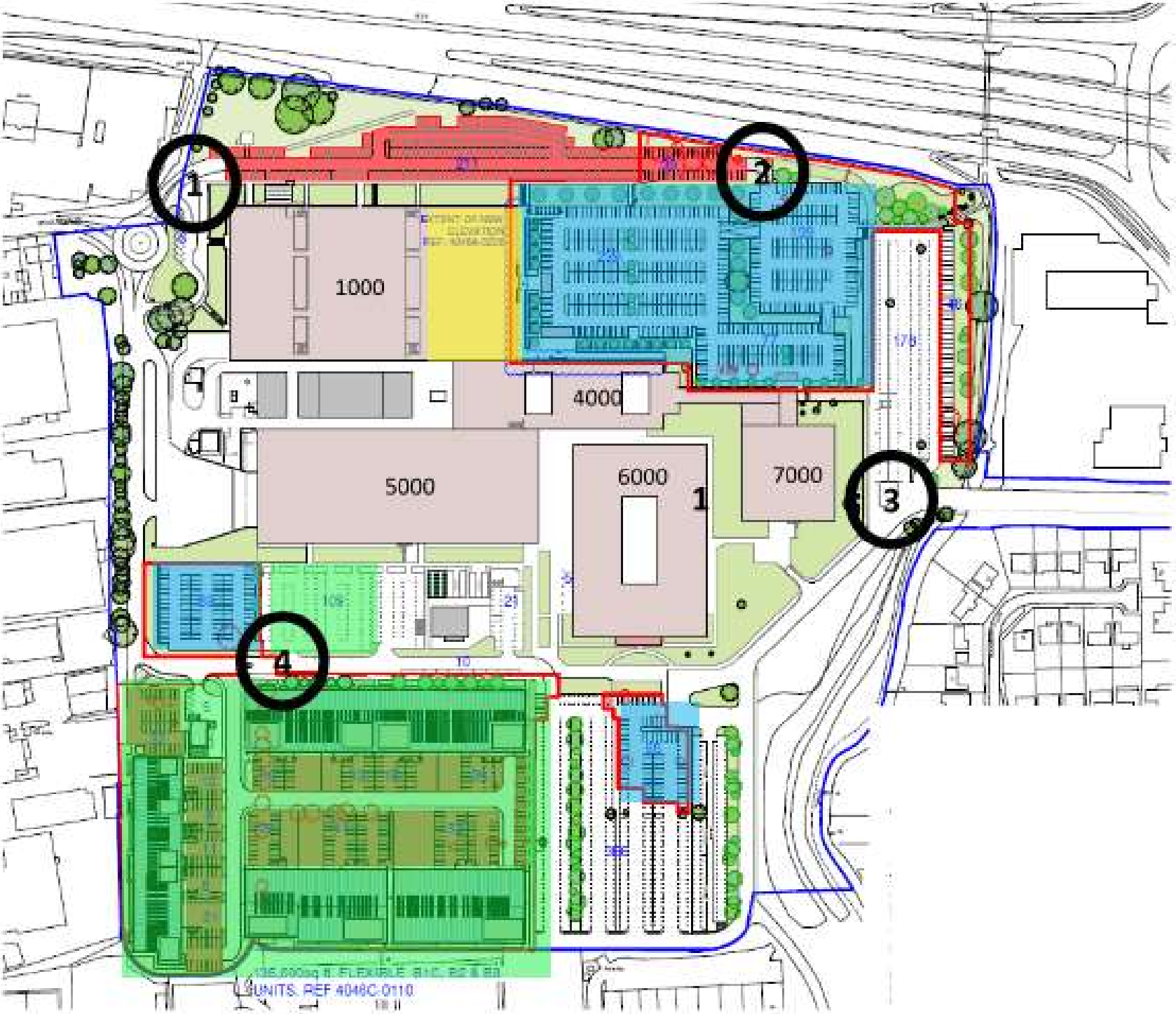
1
2
3
4
1000
4000
5000
6000
7000
UNITS. REF 4046C 0110