1267.bjh.Sept22

ARBORICULTURAL METHOD STATEMENT

42 Bath Road, Emsworth

-prepared on behalf of ***PWP Architects –***

The Granary, White Chimney Row, Westbourne PO10 8RS

mob: 07875 520881 - email: bernieharverson@gmail.com

Section	Subject Heading
1	INTRODUCTION & CLIENTS BRIEF
2	DOCUMENT DISCLOSURE STATEMENT
3	TREE SURVEY & ROOT PROTECTION SCHEDULE
4	IMPACT ASSESSMENT & TREE PROTECTION MEASURES RECOMMENDED
5	RECOMMENDED TREE WORK
6	METHOD STATEMENT
7	MONITORING & SUPERVISION
8	CONCLUSIONS

Appendices	Subject
BH1	Figure 1- Flow Diagram from BS5837 + Tree Survey Notes
BH2	Tree Survey Plan **BJH 01** & Root Constraints Plan – **BJH 02**
BH3	Tree Retention & Removals Plan **BJH 03** & Tree Protection Plans – **BJH 04 + BS5837 Figure 2 Diagram**
BH4	Qualifications & Experience

1.0 INTRODUCTION & CLIENTS BRIEF

1.1 I am instructed on this project by **PWP Architects** who act for the owners of the property at **42 Bath Road, Emsworth.**

1.2 Our clients seek to redevelop the house by adding a two storey side extension and single storey rear extensions, balconies and other alterations.

1.3 There are on and off site trees of various species which will need to be catered for in this process.

1.4 I have been commissioned to prepare a report to satisfy the arboricultural aspects of this project in accordance with BS5837:2012 recommendations.

2.0 DOCUMENT DISCLOSURE STATEMENT

I have been provided with a copy of the Planning Layout drawing as prepared by the project Architects – **PWP Architects** :-

- **Proposed Layout (with Red Line Boundary) - PWP-1100 A–1:200 @ A3 – Sept 2022.**

- this has been provided to me for the purposes of my work and I rely totally on the accuracy of this drawing in terms of tree locations; applying crown spreads and setting out protective fencing.

3.0 TREE SURVEY & ROOT PROTECTION SCHEDULES & IMPACT ASSESSMENT

3.1 I visited the site on **14th September 2022** to undertake a tree survey exercise in accordance with BS5837:2012 recommendations (see also the explanatory tree survey notes **at appendix BH1**).

Tree No.	Species	Ht m	Diam mm	Brch Sprd m	GC m	LS	Comments	Preliminary Management Recommendations	Rem Con yrs	Cat
1	English Yew *Taxus baccata*	12	300 x 4 200	N 4 E 4 S 4 W4	2.5	EM	Multi stemmed at ground level-epicormics on trunk-small diameter deadwood in crown-previously reduced and reshaped on what looks like a regular basis-good vigour and vitality and good shape and form overall.	No works required at this time.	>40	A1
2	Turkey Oak *Quercus cerris*	20	720	N 3 E 6 S 7 W7	4	EM	Epicormics on trunk- small and large diameter deadwood in crown-suppressed to north side by tree 3-previously reduced and reshaped.	Remove all deadwood for safety reasons	>40	B1
3	Turkey Oak *Quercus cerris*	18	590	N 7 E 6 S 3 W5	4	EM	Epicormics on trunk- small diameter deadwood in crown-leans north-suppressed to south side by tree 2- previously reduced and reshaped.	Remove all deadwood for safety reasons	>40	C1

3.2 A Tree Root Protection Schedule has been prepared in accordance with BS5837:2012 recommendations (see Plans BJH 01 & 02 at **appendix BH2**)

Tree No.	Tree Species	Cat	Diam mm	BS5837:2012 Table1 Radial Protection Zone m	BS5837:2012 Table D1 Polygon Area m^2	Is there a constraint to the rooting pattern
1	English Yew *Taxus baccata*	A1	300 x 4 200	7.6	181	**Yes**
2	Turkey Oak *Quercus cerris*	B1	720	8.6	235	No
3	Turkey Oak *Quercus cerris*	C1	590	7.1	157	No

4.0 IMPACT ASSESSMENT & TREE PROTECTION MEASURES RECOMMENDED

4.1 The finalised planning layout drawing has been provided to me and an assessment made as to the viability of retaining trees as part of this layout in order that they meet the RPA requirements of BS5837 - the data is presented here in tabular format:-

Key: **NO-RSAM** = Remove for sound arboricultural management reasons **NO-RTFD** = Remove to facilitate development

YES = Yes can be retained and fully protected **YES (1) =** Yes can be retained subject to mitigation measures being applied

Tree No	Species	Cat	Stem Diam mm	BS5837:2012 Radial Protection Zone m	BS5837:2012 Table D1 Root Protect. Area m^2	Distance from Site Features (see key above)	Can Tree Be Retained
1	English Yew *Taxus baccata*	A1	300 x 4 200	7.6	181	5m to existing building 6.4m to balconies and additions at a higher level	**YES**
2	Turkey Oak *Quercus cerris*	B1	720	8.6	235	13m to existing building 10m to ground level extension	**YES**
3	Turkey Oak *Quercus cerris*	C1	590	7.1	157	13m to existing building 8.2m to ground level extension	**YES**

4.2 As illustrated above there will be no (**0**) direct tree losses caused by the re-development of this site as proposed.

4.3 All trees can be fenced off from site works and safely retained and protected in accordance with BS5837:2012 recommendations.

5.0 RECOMMENDED TREE WORKS

No	Species	Tree Works Recommended
1	English Yew *Taxus baccata*	• No works required at this time.
2	Turkey Oak *Quercus cerris*	• Remove all deadwood and broken branches for safety reasons.
3	Turkey Oak *Quercus cerris*	• Remove all deadwood and broken branches for safety reasons.

6.0 METHOD STATEMENT

Generic Measures

6.1 All of the recommended tree works should ideally be undertaken by an approved and experienced tree contractor prior to any construction contractors commencing works on site.

6.2 Erect the protective fencing as specified and shown on the **Tree Protection Plan BJH03/04** **at appendix BH3**. Barriers are to be 'Fit For Purpose' to exclude construction activity and must be maintained to ensure that they remain rigid and complete and in the original setting out positions. These checks will need to be incorporated into a schedule of site monitoring visits to be agreed with the clients subject to phased development operations and subsequently copies of these site visit reports will need to be copied in to the Council.

6.3 The following prohibitions shall apply within the area enclosed by the Tree Protection Fencing [**Construction Exclusion Zone**]:-

- **No** mechanical digging or scraping once the initial ground cover vegetation has been cleared and the site fenced off.
- **No** storage of plant, equipment or materials
- **No** vehicular or plant access
- **No** fire lighting
- **No** handling, discharge or spillage of any chemical substance, including cement washings

- **No** action likely to cause localised water-logging
- **No** change in ground levels

6.4 All site works storage areas and compounds/welfare units/toilet blocks and any mixing areas are to be located over impervious surfaces or over special catchment areas such that any leakage will be captured and cannot leak into the soil causing contamination.

6.5 The full details of the proposed utility service links have not been made available to me at this time but it is most likely that these will be tied in to existing pipework without the need to excavate new service trenches. However, if this situation changes and in the event that there is any conflict with a retained trees RPA then a separate Mini Method Statement would need to be submitted to cover this work.

Site Specific Measures

6.6 None required on this project.

7.0 SITE MONITORING & SUPERVISION

7.1 A Pre-commencement site meeting is to be scheduled to take place between the development teams arboricultural consultant and the site manager and client representative where the protective fencing will be inspected to verify that they are 'Fit For Purpose' as shown on the **Tree Protection Plan at appendix BH3.**

7.2 Lines of communication will be established with the Site Manager and a contact sheet prepared so that in the event that an incident occurs involving the retained trees that requires urgent advice and guidance from the project Arboricultural Expert this can be easily organised.

7.4 The details of the Protective Fencing works will be inspected by the Arboricultural Expert and photographed and the following reporting procedure will be adopted.

This is an example of the format for the **Site Monitoring Schedule** that would be prepared. :-

Schedule Of Site Monitoring & Supervision for – 42 Bath Road, Emsworth

- **In accordance with the Arboricultural Method Statement Report - 1267.bjh.Sept22 & Tree Protection Plan - BJH 03/04**

Date of Inspection	Item	In Attendance	Notes/Observations From Inspection	Details Of Any Follow Up Action Required
tba	**Pre-Commencement Checks** - **Protective Fencing**	Site Construction Manager & the Project Tree Consultant	• The site was inspected and I can confirm that the tree protection measures carried out are 'Fit For Purpose' and meet with BS5837:2012 recommendations.	•

8.0 CONCLUSIONS

- The development work proposed will not result in the direct loss of any trees on this site and all trees (both on and off site) can be fully protected in accordance with BS5837:2012 recommendations.
- Provided that the above methodology is strictly adhered to in a carefully considered and phased and supervised manner then I would not foresee any detrimental impact taking place that might undermine the ongoing health and stability or visual amenity value of those trees shown for retention.

Bernie Harverson
arboricultural consultant

BH 1

Figure 1 - Flow Diagram
& Tree Survey Notes

Figure 1 The design and construction process and tree care

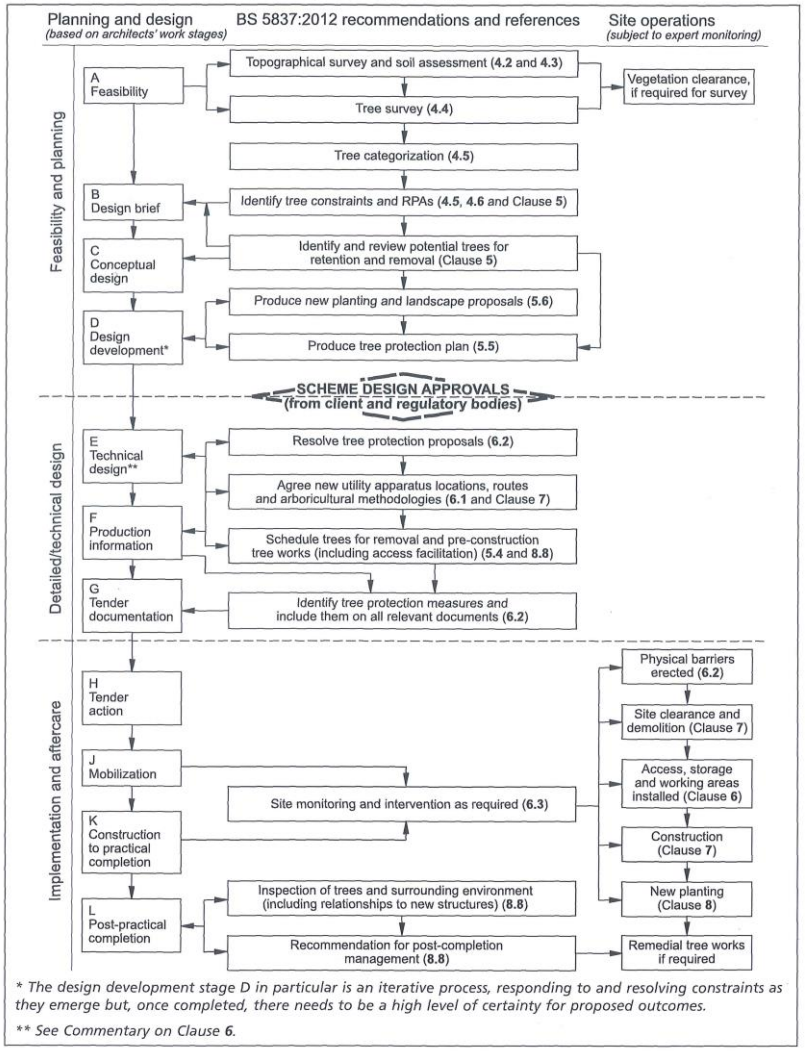

TREE SURVEY NOTES

These Tree Survey Notes have been prepared in accordance with the recommendations of **British Standard 5837:2012** and they define the criteria for pre –development tree surveys.

- Each tree/group/hedge/shelterbelt/woodland has been allocated a unique number (**No.**). where specifically requested and appropriate fees are agreed small durable numbered metal tags can be applied to each tree/group surveyed.
- The tree species (**Species)** is provided in both English and Latin name formats.
- Height assessments (**Ht**) are estimated in metres. This will be adequate for the majority of cases, but where accurate heights become a critical issue it may be necessary to return to site, as a separately commissioned exercise, to collect accurate measurements with the aid of optical instruments.
- Trunk/stem diameters (**Diam**) are measured in millimetres **at 1.5m above ground level** – where the tree is inaccessible the diameter is estimated as indicated by suffix **#**
- Radial crown spread assessments (**Brch Sprd**) are estimated in metres from the centre of the trunk/group to each of the four primary points of the compass (**N**-north**; E**-east**; S**-south and **W**-west**)** in order to achieve a representation of the crown shape which will be shown on the accompanying tree survey plan. These provide a general guide as to the main bulk outline of a tree/groups crown but **are not tape measured dimensions.** These would only be undertaken as part of a separately commissioned exercise, where precise dimensions are critical to the project at hand.
- Both the canopy ground clearance (**GC**) and the height & compass direction of the lowest major branch (**LMB**) are estimated and shown in metres
- An assessment of a tree/groups 'life stage' (**LS)** is made in terms of its site specific maturity as part of the surrounding landscape, taking into account its overall shape and form in that setting, and is recorded thus :-
  Y - Young tree/group; **SM - Semi**-Mature tree/group; **EM -** Early-Mature tree/group;
  M – Mature tree/group; **OM -** Over – mature tree/group
- Data on the structural condition (**Condition Comments)** of the tree/group is provided to give its visual appearance and any significant health and safety issues.
- Details of any recommended tree works required at the time of survey is given under the heading – **Preliminary Management Recommendations.**
- An estimate of a tree/groups remaining contribution in years (**RC)** is made and is recorded thus :- **0-5; 5-10; 10-20; 20-30; 30-40** or **>40** years**.**
- The category grading (**Cat)** for each tree/group is assessed according to the criteria provided within **BS5837:2012.** The assessment is made of the tree/group in its current condition and within the environment encountered bearing in mind its suitability for retention as part of any future proposed development; although the exact layout detail of any specific scheme will not be known at the time of surveying. The trees have been classified into one of four categories and colour coded as BS5837 recommends :- **U** (dark red); **A** (light green); **B** (mid-blue) and **C** (grey).Please note that suffixed numerical sub-categories are also applied for guidance only and do not carry any cumulative or increased value for the tree/group. This colour coding scheme will be applied to all drawings provided.

Table 1 – Cascade chart for tree quality assessment

Category and definition	Criteria			Colour on plan
Trees unsuitable for retention				
Category U Those in such a condition that they cannot realistically be retained as living trees in the context of the current land use for longer than 10 years.	• Trees that have a serious, irremediable, structural defect, such that their early loss is expected due to collapse, including those that will become unviable after removal of other category U trees (i.e. where, for whatever reason the loss of companion shelter cannot be mitigated by pruning) • Trees that are dead or are showing signs of significant, immediate, and irreversible overall decline • Trees infected with pathogens of significance to the health and/or safety of other trees nearby, or very low quality trees suppressing adjacent trees of better quality NOTE Category U trees can have existing or potential conservation value which it might be desirable to preserve.			**Dark Red**
Trees to be considered for retention				
	Criteria – Subcategories			
	1	**2**	**3**	
Category A **Trees of high quality** with an estimated remaining life expectancy of at least 40 years	Trees that are particularly good examples of their species, especially if rare or unusual, or those that are essential components of groups or formal or semi-formal arboricultural features (e.g. the dominant and/or principal trees within an avenue)	Trees, groups or woodlands of particular visual importance as arboricultural and /or landscape features	Trees, groups or woodlands of significant conservation, historical, commemorative or other value (e.g. veteran trees or wood-pasture)	**Light Green**
Category B **Trees of moderate quality** with an estimated remaining life expectancy of at least 20 years	Trees that might be included in the category A, but are downgraded because of impaired condition (e.g. presence of significant though remediable defects including unsympathetic past management and storm damage), such that they are unlikely to be suitable for retention for beyond 40 years; or trees lacking the special quality necessary to merit the category A designation	Trees present in numbers, usually growing as groups or woodlands, such that they attract a higher collective rating than they might as individuals; or trees occurring as collectives but situated so as to make little visual contribution to the wider locality	Trees with material conservation or other cultural value	**Mid Blue**
Category C **Trees of low quality** with an estimated remaining life expectancy of at least 10 years, or young trees with a stem diameter below 150mm	Unremarkable trees of very limited merit or such impaired condition that they do not qualify in higher categories	Trees present in groups or woodlands, but without this conferring on them significantly greater collective landscape value, and/or trees offering low or only temporary/transient landscape benefits	Trees with no material conservation or other cultural value	**Grey**

BH 2

Tree Survey & Root Protection Plans

BJH 01/02

BH 3

Tree Protection Plan BJH 03/04

+ BS5837:2012 – Figure 2

Figure 2 **Default specification for protective barrier**

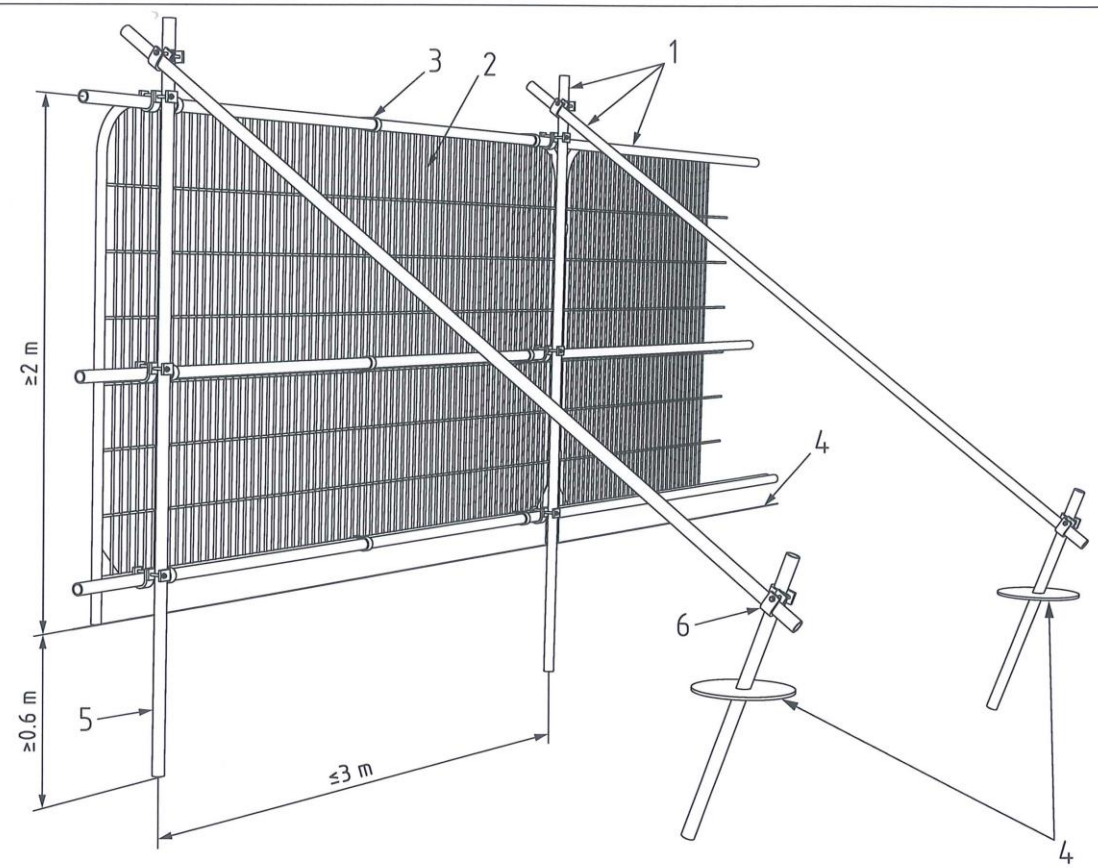

Key

1 Standard scaffold poles

2 Heavy gauge 2 m tall galvanized tube and welded mesh infill panels

3 Panels secured to uprights and cross-members with wire ties

4 Ground level

5 Uprights driven into the ground until secure (minimum depth 0.6 m)

6 Standard scaffold clamps

Bernie Harverson
arboricultural consultant

BH 4

Qualifications & Experience

Bernie Harverson
arboricultural consultant

QUALIFICATIONS AND EXPERIENCE

- My name is **Bernie Harverson** and I am a self employed independent arboricultural consultant in private practice. I take instructions primarily in the South of England but also on occasions work nationwide and abroad and have offices at : –

  The Granary, White Chimney Row, Westbourne PO10 8RS
- I hold the following arboricultural qualification – **National Diploma in Arboriculture** (***Royal Forestry Society – 1976***)
- I have **fifty-one (51)** years of practical and managerial experience in the arboricultural industry including periods in both the public and private sectors.
- My Local Government sector experience comprises one year as a tree surgeon with Brighton Parks and nine years spent in Arboricultural Officer posts with both Westminster City Council and Portsmouth City Council.
- My past practical experience in the private sector includes two years at Tilhill Forest Nursery and over ten years for various companies as a Climbing Arborist/Tree Surgeon.
- Managerial work in the private sector includes two years as manager of Beechings Tree Surgeons and twelve years with CBA Trees as Managing Director & Senior Arboricultural Consultant.
- As an independent self employed Arboricultural Consultant I now provide a comprehensive range of services including :-
  tree surveys, appraisals, assessments and inspections with particular reference to planning and development and tree safety audits with a service offered as a climber to undertake full climbing inspections to better understand the condition of a given tree before prescribing a management strategy.
- I also undertake litigation work appearing as an Expert Witness in Court Actions and at Planning Appeals, Hearings and Public Local Inquiries.

The Granary, White Chimney Row, Westbourne PO10 8RS

mob: 07875 520881 - email: bernieharverson@gmail.com