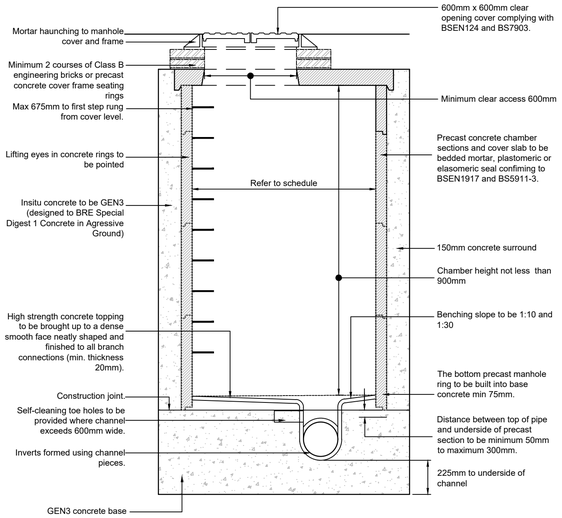

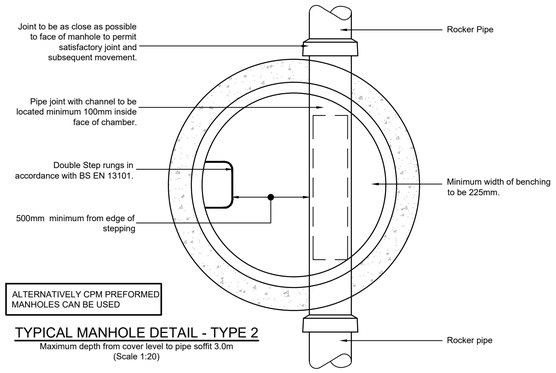

ALTERNATIVELY CPM PREFORMED MANHOLES CAN BE USED

TYPICAL MANHOLE DETAIL - TYPE 2

Maximum depth from cover level to pipe soffit 3.0m
(Scale 1:20)

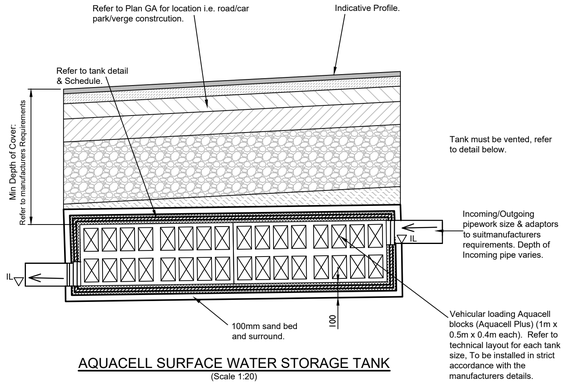

AQUACELL SURFACE WATER STORAGE TANK

(Scale 1:20)

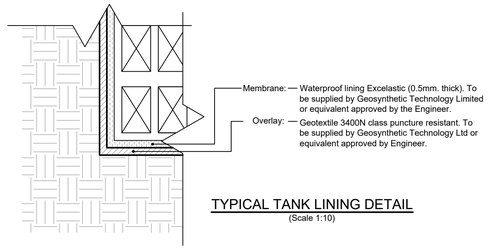

TYPICAL TANK LINING DETAIL

(Scale 1:10)

	Length (m)	Width (m)	Depth of Cover/Height (m)	Base Level (AOD)
Geocellular TANK A	20.00m	3.0m	0.850m/1.20m	20.90m

SCHEDULE OF TANK SIZES

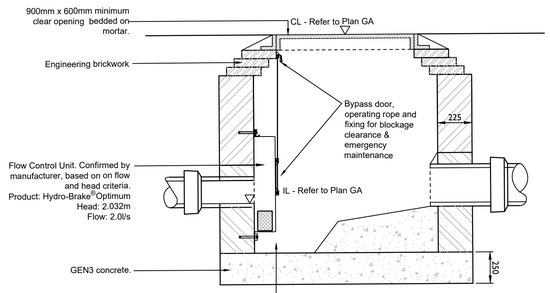

Product: Hydro-Brake Optimum
Product Reference Number:
CTL-SHE-0057-2000-2032-2000
Dimensions W x D (mm) : 350 X 65
Sump Dimensions W x D (mm) : 130 X 285
Hydro International
+441275 337937
hydrobrake@hydro-int.com

Sump dimensions 130 x 285mm as per Unit manufacturers details.

SECTION

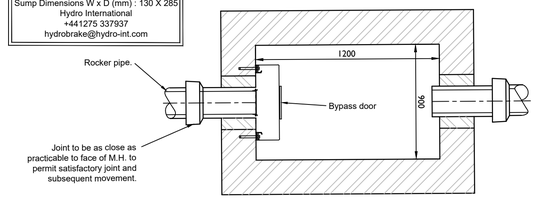

PLAN

FLOW CONTROL CHAMBER

(Scale 1:20)

The details shown above are indicative only and should not be used as a scaled drawing. Please refer to manufacturers installation.

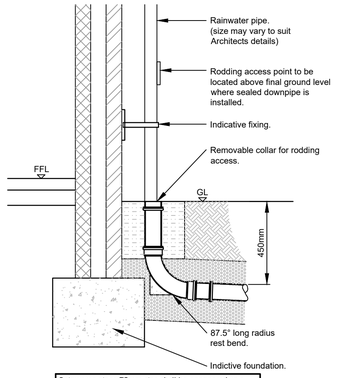

Rainwater pipes 75mm size shall be connected to a minimum 100mm diameter drain below ground.

Rainwater pipes 100mm size shall be connected to a minimum 150mm diameter drain below ground.

Please refer to plan GA for for further details.

TYPICAL RWP REST BEND DETAIL

(Scale 1:20)

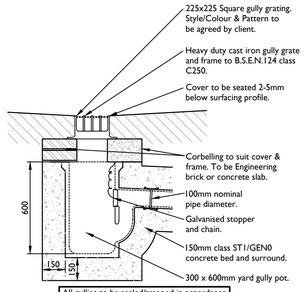

All gullies to be sealed/trapped in accordance with The Environment Agency requirements.

TYPICAL YARD GULLY (600mm POT)

(Scale 1:20)

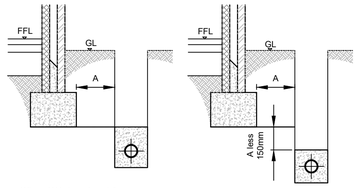

Where 'A' is less than 1.0m. concrete fill trench to this level

Where 'A' is more than 1.0m. concrete fill trench to this level

DETAIL OF PIPE RUNS NEAR BUILDINGS

(Scale 1:10)

NOTE: PIPE SUPPORTED RAFT SLABS PROPOSED

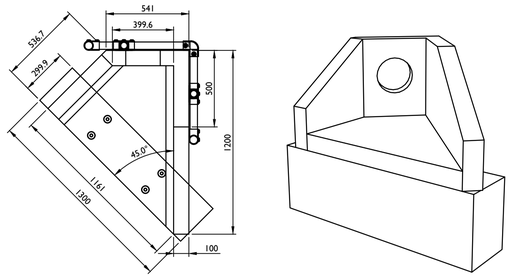

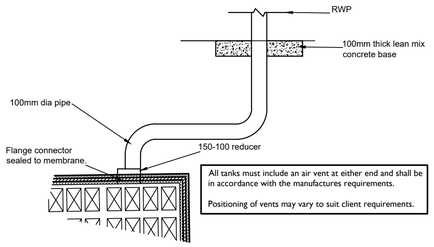

All tanks must include an air vent at either end and shall be in accordance with the manufactures requirements.

Positioning of vents may vary to suit client requirements.

AQUACELL TANK VENT

(Scale 1:20)

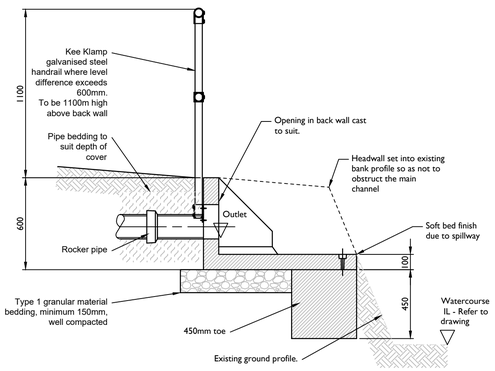

HEADWALL - ALTHON AH4CA (OR EQUIVALENT (150Ø) OUTFALL TO ORDINARY WATERCOURSE

CROSS SECTION

(Scale 1:20)

Althon Angles Headwall Range to be utilised.
Precast concrete headwall, with 150mm diameter outfall pipe. Pipe invert levels as per drainage strategy design drawings and calculations.
The Althon Headwall Range comes with optional pre-fitted flap valve, or optional pre-fitted Grating, if deemed necessary. Refer to Manufacturer's Guidance for more details.

FINAL DESIGN/POSITION SUBJECT TO ADDITIONAL SURVEY & OWC CONSENT

DO NOT ORDER UNTIL CONFIRMED

Minimum Dimensions for Access Fittings and Chambers						
Type	Internal Sizes				Cover Sizes	
	Depth to invert (m)	Size of largest pipe (DN)	Length x Width (mm)	Circular (mm)	Length x Width (mm)	Circular (mm)
Rodding Eye	As Drain but Minimum 100mm					
Shallow Access Small Large	0.6 or less	150	150x100 225x100	150	150x100 225x100	150
Inspection Chamber	0.6 or less 1.2 or less 1.2 - 3.0	150	450x450 450x450	190 450 450	450x450 300x300	190 450 350
Manhole	1.5 or less Over 1.5	150 225 300 >300 225 300 375-450 >450	675x750 675x1200 675x1200 DN+450 x1800 1200x1000 1200x1075 1350x1225 DN+775 x1800	1200 1200 1200 The larger of 1800 or (DN+450) 1200 1200 1200 The larger of 1800 or (DN+775)	675x750 1200x675 1200x675 1200x675 600x600 600x600 600x600 1200x675	n/a n/a n/a n/a 600 600 600 600
Manhole Shaft	Over 2.7		900x840	900	600x600	600

BUILDING REGULATIONS MINIMUM DIMENSIONS FOR MANHOLES

(Not to Scale)

This plan complies with the Building Regulations 2002 Section 'H' - Drainage & Waste Disposal.

NOTES

A1

1. This drawing is to be read in conjunction with all other BPC drawings, and with all relevant Architect's and Engineer's drawings and specification. Any discrepancies found are to be reported immediately to the Engineer.
2. BPC accepts no responsibility for inaccuracies in data provided by third parties such as topographic surveys or Ordnance Survey mapping.
3. Do not scale, work to figured dimensions only. All dimensions are in millimeters unless noted otherwise and all levels are in metres from the topographic survey datum.
4. Any information given regarding existing underground services is given in good faith after consultation with the relevant authority, however accuracy is not certain. The main contractor is responsible for checking all information on site prior to work commencing and taking due care whilst undertaking the works.
5. All dimensions to be checked on site. All details and dimensions relating to sub-contractors work must be checked and agreed between the sub-contractor or supplier and the general contractor.
6. The electronic information from this drawing can not be guaranteed as dimensionally drawn exact. Figured dimensions must be used for setting out and detailing. BPC logos and company information must be removed from copies if information is re-used.
7. The main contractor is responsible for the design of all temporary works, and is also responsible for the safe maintenance and stability of existing buildings at all times.
8. The main contractor is responsible for dealing with all occurrences of ground water during the construction period.
9. The contractor must comply with all current legislation relating to health & safety.
10. All products specified shall be installed in strict accordance with the manufacturers recommendations and instructions. If there are discrepancies between that information and the details on any BPC drawings, the manufacturers instructions must be used.
11. All Earthworks in accordance with the Specification for Highway Works.

DRAINAGE NOTES:

1. All drainage works to be constructed in strict accordance with specification of the Local Authority, Building Regulations, Design and Construction Guidence (published by Water UK), BS8301 & BSEN.752-1.
2. For location and setting out of building drainage points refer to architects drawings.
3. All pipe runs near buildings to comply with the Building Regulations 2002 part H1. Where a pipe is within 1m of a foundation the trench shall be filled with class gen3 concrete up to the lowest level of the foundation. Where the trench is further than 1m from the foundation, the trench shall be filled with class gen3 concrete to a level below the lowest level for the foundation equal to the distance from the foundation less 150mm. In both cases the pipe shall be bedded and surrounded in 150mm thick class GEN3 concrete.
4. Where pipes, external to the structures, have a depth to soffit from ground level of less than 450mm they shall have a class GEN3 concrete encasement (150mm thick).
5. Where a pipe, under a carriageway, has a depth of cover of less than 1.2m the pipe shall be laid in a concrete bed and surround.
6. In any circumstances where pipes are bedded and surrounded in concrete flexible joints should be provided, compressible boards (fibreboard or polystyrene) shall be provided at a maximum of 8m centres (coinciding with pipe joints). the boards shall be pre-cut to pipe diameter and to a height and width equal to the concrete cross section. a board thickness of 18mm for pipes up to 450mm nominal diameter and 36mm for pipes over 450mm nominal diameter.
7. All private building drainage shall be constructed in strict accordance with BS EN.752-1. Foul drainage beneath the floor slab shall be laid, shall be laid no flatter than 1:40. Unless otherwise specified below ground building drainage external to the building shall be 100mm diameter and shall be laid at a minimum gradient of (<1l/s = 1 in 40/>1l/s = 1 in 80) for foul drains and 1 in 80 for surface water drains.
8. All building drains shall be laid in conjunction with 'non adoptive bedding details' (class d, n or b) unless otherwise specified.
9. All pipes, bends and junction for private building drainage shall be UPVC conforming to BS4660, BSEN13598 and BSEN1401 as appropriate and shall be laid in accordance with the manufacturer's specification.
10. All pipes, bends and junction materials for adoptable drainage shall be vitrified clay, extra strength or super strength to BSEN295, with flexible joints and kitemark certified
11. All back inlet gullies to be roddable or connected to inspection chambers.
12. All gully connections other than at manholes to be 'y' junctions.
13. All road gully connections to be 150mm diameter.
14. All stub stacks to be fitted with air admittance valves where branch drain exceeds 12m except at the head of the run. Soil vent pipes located at the head of a run to terminate to fresh air.
15. No low point shall be without a method of drainage.
16. All connections to be soffit to soffit unless otherwise noted.
17. All concrete and concrete products to be in accordance with BRE 363 for sulphates.
18. The locations of all building drainage points shall be cross referenced against the architects drawings during setting out.
19. Before connections are made to existing public sewers an application under 106 must be made to relevant sewerage undertaker.
20. The precise depth and location and size of existing pipes, watecourses or manholes where connections or diversion are proposed must be confirmed and reported to the engineer before works commence on site.
21. Existing drains - any existing drains to be abandoned to be decommissioned in view of building regulations by either building out, infilled or sealed.
22. Should ground water be encountered on site during construction BPC shall be informed to determine if additional measures are required.
23. The drainage drainage system shall be fully cleansed on completion of the project using methods that ensure pollution off site does not occur.
22. Any existing land drains severed during construction shall be reinstated.

FOR APPROVAL

Rev.	Amendments	Date
A	Revised Details	09/03/2022
-	Original Issue	08/03/2022

BRIGHT PLAN CIVILS
Transport Planning and Infrastructure Design Consultants
2 West Barn, Norton Lane, Chichester, West Sussex PO20 3AF
Tel: 01243 210418 Fax: 01483 861682
www.brightplancivils.co.uk

Drawing Status: FOR APPROVAL

Client: Metis Homes Ltd

Project: Land adj. Long Copse Lane Emsworth, Hants

Drawing Title: Construction Details Sht1

Scale	Date	Drawn By	Checked By
As Shown	Mar 2022	DJL	MJA

Drawing No. D2059-400 | Rev. A