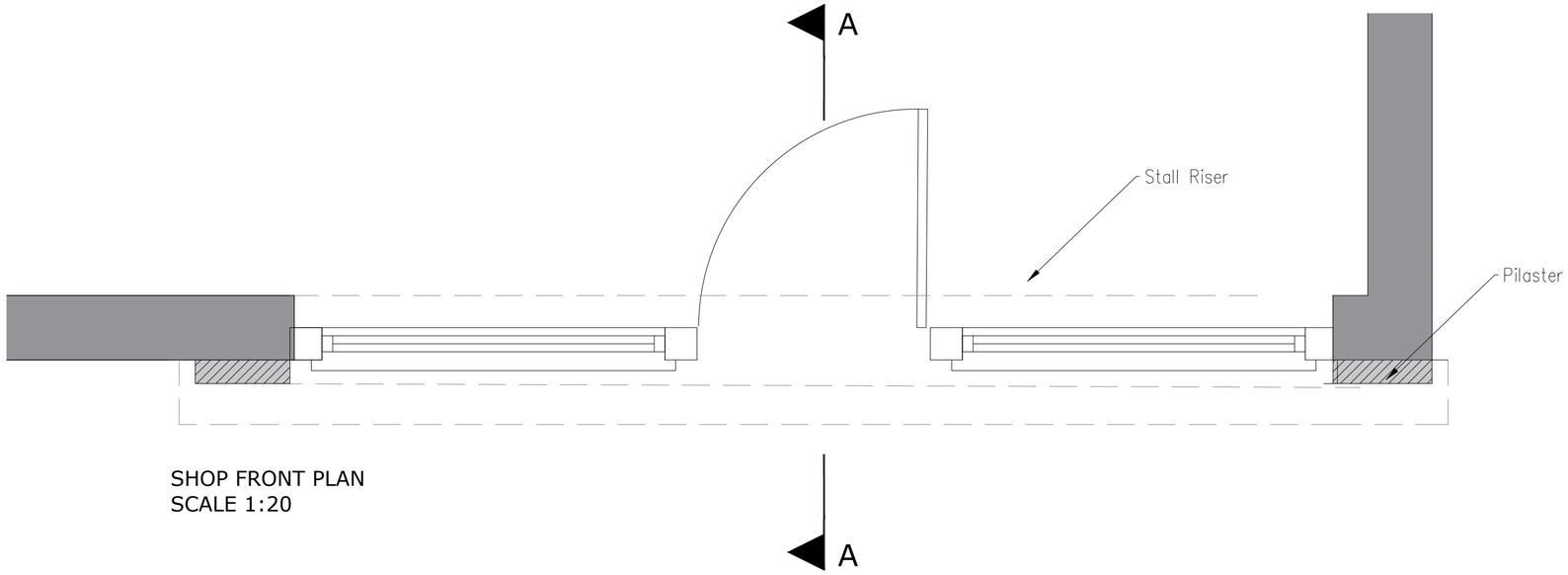

SHOP FRONT PLAN
SCALE 1:20

KEY

1. Marine Grade Plywood (Painted Grey)
2. Timber Mullion
3. Timber Frame Windows
4. Timber Door
5. Lead Covering

GENERAL NOTES:
This drawing is the property of Cordage Group and must not be reproduced in part or whole or used for the execution of works without their permission.

All dimensions to be checked on site prior to commencement of any construction works and Cordage Group notified of any discrepancy via the Supervising Officer.

Figured dimensions are to be used in preference to scaled dimensions. However for Planning purposes scaling is permitted.

No deviation from this drawing will be permitted without the express consent of Cordage Group via the Supervising officer.

All works are to comply with the current edition of the Building Regulations and British Standards.

It is the contractors responsibility to check all dimensions and quantities on site prior submitting his tender for the works.

Construction Design and Management (CDM) REGULATIONS 2015, RISK ASSESSMENT.

M & E
Standards required - CIBSE, BAFE, NICEIC, Gas safe.
Dampers to ducting where required.
Fire stopping where required.
Light fittings to be Fire Rated where ceilings are fire separation.
Fire Officer Testing and Certificate.

BUILDING REGULATIONS
To Building regulation and British Standard.
Requirements in all respects.
To Fire Officer requirements in all respects.
The Building Contractor must include for all works required by the M&E Contractors.

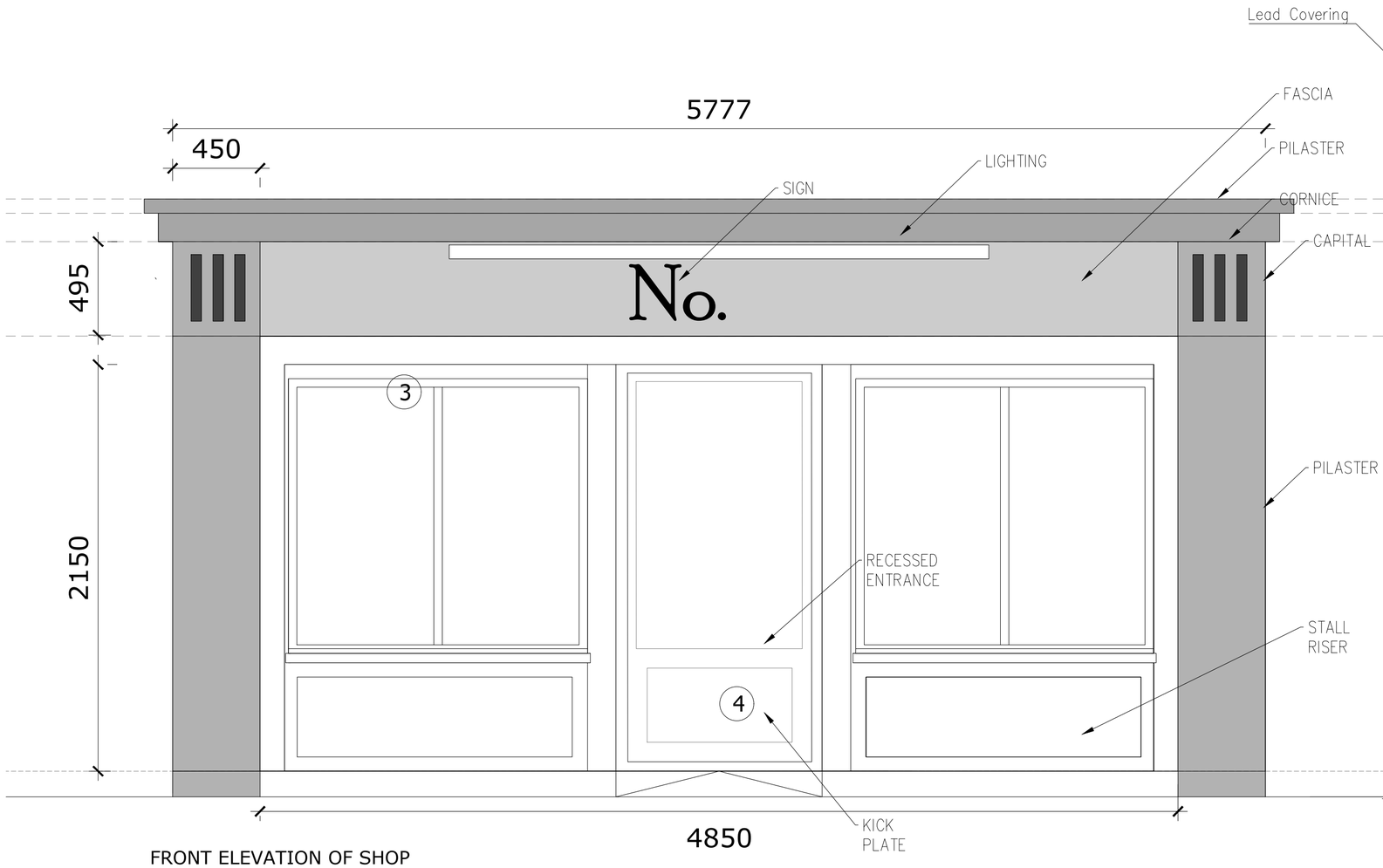

FRONT ELEVATION OF SHOP
SCALE 1:20

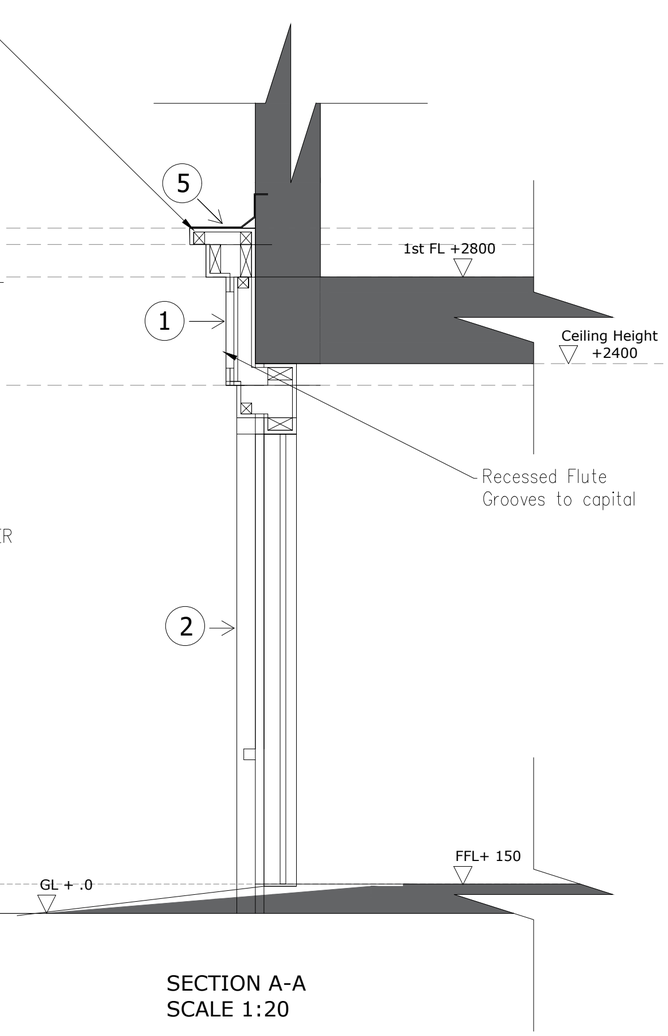

SECTION A-A
SCALE 1:20

CLIENT
Cordage 14 Ltd.

PROJECT
Emsworth Surgery,
6 North St,
PO10, 7DD

ISSUE
28.05.2021
RE-ISSUE
-

SCALE
1:20@A2

DRAWN BY: AC

DESCRIPTION
Proposed SHOP FRONT

PROJECT NO.
20.37
100.01 B

cordage design
Unit 3, Broadbridge Business Centre, Delling Lane, Bognor PO18 8NF
www.cordagedesign.com