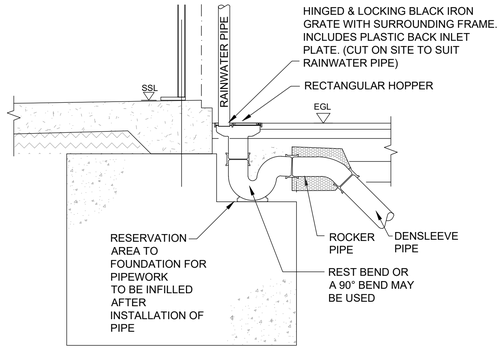

TYPICAL EXTERNAL RWP WITH ACCESS GULLY

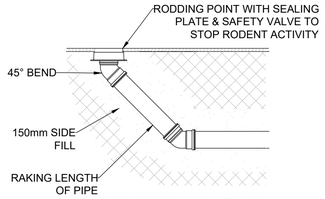

RODDING EYE

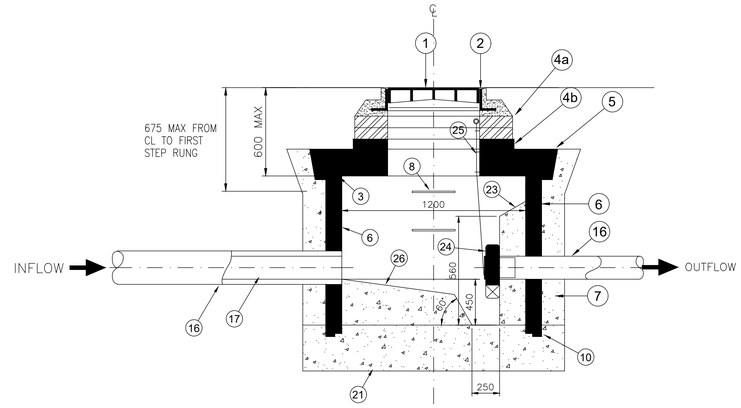

SECTION

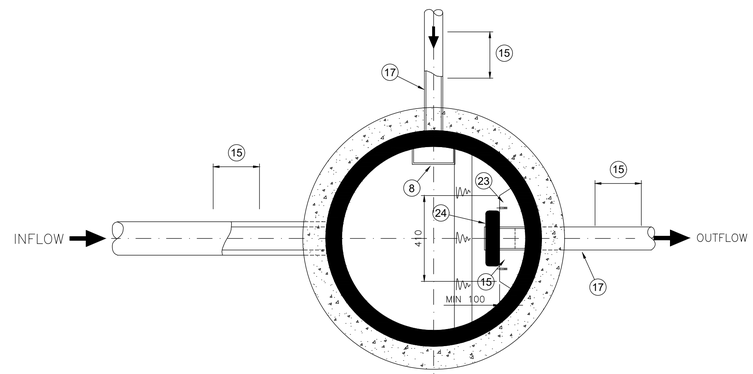

PLAN

TYPE 2 MANHOLE - VORTEX FLOW CONTROL (HYDRO-BRAKE) CHAMBER. NTS

KEY

1. FOR ACCESS COVER TYPE REFER TO MANHOLE SCHEDULE ON DRAWING 2/5943-900.
2. COVER FRAME BEDDED ON AND HAUNCHED IN CLASS M1, M2 OR EPOXY MORTAR NO GREATER THAN 20mm THICK. APPROVED PACKING MATERIAL MAY BE USED IF REQUIRED.
3. 10mm UNCOMPRESSED THICKNESS OF 'TOKSTRIP' OR SIMILAR APPROVED COMPRESSIBLE SEALANT TO ALL HORIZONTAL JOINTS.
4a. TYPE 2 COVER FRAME SEATING RINGS WITH 600x600 CENTRAL ACCESS OPENING OR MIN TWO COURSES OF ENGINEERING BRICK.
4b. TYPE 1 COVER FRAME SEATING RING WITH 600x600 ECCENTRIC ACCESS OPENING (BSEN752-3 & BSEN1917) BEDDED ON MORTAR.
5. REINFORCED PRECAST CONCRETE (SULPHATE RESISTING) HEAVY DUTY COVER SLAB TO BS5911:PART 200 WITH 750x600 ACCESS OPENING, BEDDED ON MORTAR.
6. PRECAST CONCRETE (SULPHATE RESISTING) CHAMBER RINGS TO BS5911:PART 200.
7. MIX ST4 SULPHATE RESISTING CONCRETE SURROUND MIN 150 THICK.
8. POLYPROPYLENE ENCAPSULATED DOUBLE STEP RUNGS TO BS1247 PARTS 1 & 2. MIN WIDTH 280mm AT 250mm CTRS.
9. GRANO CONCRETE BENCHING (MIN 20mm THICK) TO BE BROUGHT UP TO A DENSE SMOOTH FACE NEATLY SHAPED AND FINISHED TO ALL BRANCH CONNECTIONS. BENCHING SLOPE TO BE BETWEEN 1 IN 10 AND 1 IN 30.
10. BOTTOM CHAMBER SECTION TO BE BUILT INTO BASE CONCRETE MIN 75mm.
11. CONSTRUCTION JOINT.
12. INVERT WITHIN CHAMBER TO BE FORMED USING A CHANNEL PIPE.
13. MIX ST4 CONCRETE.
14. DISTANCE BETWEEN TOP OF PIPE AND UNDERSIDE OF PRECAST CHAMBER TO BE 100.
15.

PIPE DIA	ROCKER PIPE LENGTH
150-600	600
675-750	1000
825+	1250

16. ALL PIPES ENTERING OR LEAVING MANHOLES SHALL HAVE A FLEXIBLE JOINT WITHIN 600mm OF THE INSIDE FACE OF THE MANHOLE.
17. SHORT LENGTH PIPE TO BE SIMILAR LENGTH TO ROCKER PIPE.
18. PIPE JOINT WITH CHANNEL TO BE LOCATED MIN 100mm FROM INSIDE FACE OF CHAMBER.
19. TOE HOLES TO BE PROVIDED IN BENCHING OF SEWER GREATER THAN 450mmØ FOR ACCESS TO INVERT.
20. 150 MIN STANDARD CONCRETE MIX 'ST2' SURROUND TO SUMP AND TO 150 MIN ABOVE OUTGOING PIPE INVERT. ALTERNATIVELY, 150 MIN STANDARD CONCRETE MIX 'ST2' CAST INSITU SUMP IN LIEU OF PRECAST CONCRETE CHAMBER RINGS.
21. 225 MIN INSITU CONCRETE BASE SLAB (STANDARD MIX 'ST4').
22. INLETS AND OUTLETS TH0ROUGHLY PACKED AND SEALED WITH MORTAR AROUND PIPES.
23. 'HYDRO-BRAKE' FIXED TO CONCRETE MOUNTING BLOCK WITH MASONRY STUD ANCHOR FIXING BOLTS.
24. 'HYDRO-BRAKE OR SIMILAR' FLOW CONTROL FITTED WITH PIVOTING BY-PASS DOOR.
25. PIVOTING BY-PASS DOOR OPERATING STEEL ROPE WITH PULL HANDLE FIXED JUST UNDER ACCESS COVER FOR MANUAL OPERATING AT GROUND LEVEL.
26. CONCRETE BENCHING.

Dia (mm)	Bd (m)	GRANULAR MATERIAL TO NOMINAL SINGLE SIZED AS FOLLOWS.
100	0.5	100 DIA. 10mm
150	0.6	150 DIA. 10mm/ 14mm.
225	0.7	200 DIA.
300	0.85	& ABOVE 10mm/ 14mm/ 20mm.
375	1.05	
450	1.15	
525	1.20	
600	1.35	
1050	1.80	

NOTE 1
Bd. = TRENCH WIDTH AT CROWN OF PIPE - (NARROW TRENCH WIDTH CONDITIONS)
Bc = OUTSIDE DIAMETER OF PIPE

CLASS 'A' & CLASS 'S' FOR PIPE DIAMETERS 100 TO 525. GENERAL CASE CLASS 'S'.
CLASS 'A' FOR USE WHERE CROWN OF PIPE IS WITHIN 1.2m OF U/S OF PAVING.
CLASS 'F' FOR 100 & 150 DIAMETER CONCRETE OR VITRIFIED CLAY ONLY.
CLASS 'F' IS NOT TO BE USED FOR PLASTIC PIPES.

1. BACK FILL TO TRENCHES TO BE SELECTED GRANULAR MATERIAL. MAX. PARTICLE SIZE NOT EXCEEDING 75mm, AND NOT MORE THAN 10% PASSING 75mm SIEVE. MATERIAL SHALL NOT CONTAIN ANY CLAY LUMPS OR ANY OTHER FOREIGN MATTER.

2. PIPES TO BE VITRIFIED CLAY TO BSEN 295 OR PVC-U TO BSEN 1404-1:1998 TO CONTRACTOR CHOICE

EXTERNAL PIPE BEDDING DETAILS

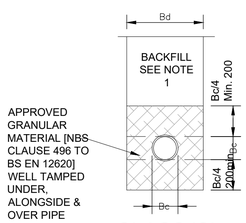

CLASS 'S'

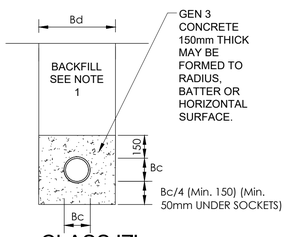

CLASS 'Z'

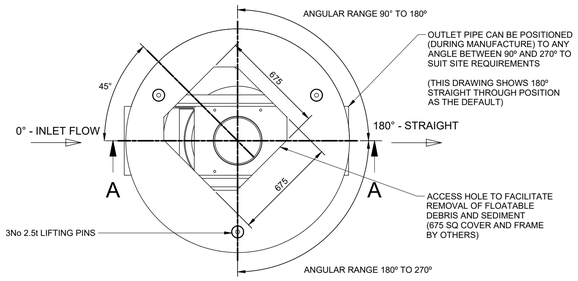

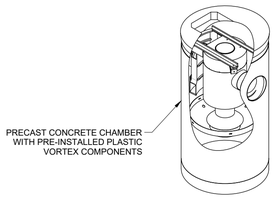

DOWNSTREAM DEFENDER INSTALLATION

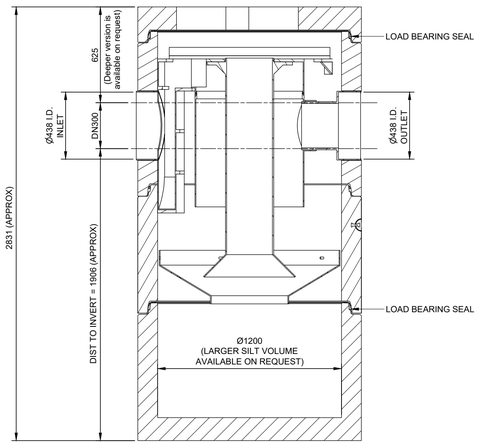

Section A - A

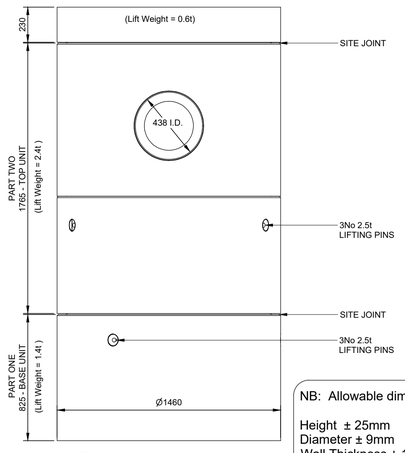

Elevation on Inlet

NB: Allowable dimensional variation

Height ± 25mm
Diameter ± 9mm
Wall Thickness ± 10mm

DOWNSTREAM DEFENDER DN 1200 CONCRETE CHAMBER HDPE INTERNAL COMPONENTS

(SCALE 1:50)

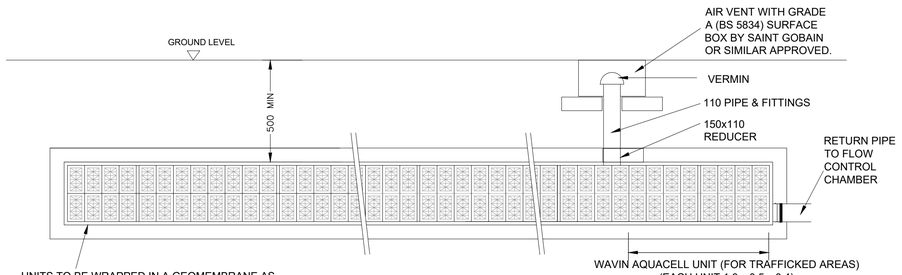

UNITS TO BE WRAPPED IN A GEOMEMBRANE AS RECOMMENDED AND SPECIFIED BY THE MANUFACTURER IN APPENDIX 5D OF WAVINS 'STORMWATER MANAGEMENT - DESIGN & INSTALLATION' GUIDE, INCLUDING PROTECTIVE FLEECE OVER THE GEOMEMBRANE.
UNITS TO BE PLACED ON 100MM DEEP OF SHARP SAND.
PIPE ENTRY POINTS AND GEOTEXTILE TO BE SEALED IN ACCORDANCE WITH MANUFACTURERS RECOMMENDATIONS, INCLUDING WELDED DOUBLE SEAMS.
WAVIN (01249 766600) AQUACELL UNITS TO BE USED UNLESS SPECIFIC AGREEMENT GIVEN BY CLIENT FOR ALTERNATIVE APPROVED PRODUCT.

FOR 1 IN 100 YEAR + 40% CLIMATE CHANGE STORAGE (PRIVATE)

PIPEWORK SHOWN INDICATIVELY ONLY.
SEE GENERAL ARRANGEMENT FOR LOCATIONS AND LEVELS OF PIPEWORK.

AQUACELL NOTES
AQUACELLS TO HAVE TYPE 1 OR TYPE 2 SUB-BASE BACKFILL TO THE SIDES AND OVER THE CELLS ONLY. MATERIAL TO BE COMPACTED IN ACCORDANCE WITH TABLE 6/1 OR 8/1 OF THE SPECIFICATION FOR HIGHWAY WORKS AND TAKING INTO ACCOUNT MAXIMUM ROLLER WEIGHTS AS ADVISED BY WAVIN.

CONSTRUCTION PLANT **NOT** TO TRAFFIC NEAR OR OVER AQUACELL LOCATIONS UNLESS SPECIFICALLY AUTHORISED BY THE ENGINEER.

AQUACELL SURFACE WATER STORAGE DETAILS

PRELIMINARY DRAWING
THIS DRAWING IS FOR PRELIMINARY INFORMATION PURPOSES ONLY AND MUST NOT BE READ AS A CONSTRUCTION ISSUE. IT INDICATES DESIGN INTENT ONLY AND IS SUBJECT TO AMENDMENT DURING FINAL DESIGN DEVELOPMENT

Rev	Date	Description	By	Check	App.
P1	19.06.19	PRELIMINARY	CN		

COPYRIGHT: THE COPYRIGHT OF THIS DRAWING IS VESTED IN CLANCY CONSULTING.
IT SHALL NOT BE USED WITHOUT PERMISSION BY ANYONE FOR ANY PURPOSE.
DO NOT SCALE THIS DRAWING ELECTRONICALLY OR MANUALLY.
WORK TO FIGURED DIMENSIONS ONLY.
ALL DIMENSIONS ARE IN MILLIMETRES UNLESS STATED OTHERWISE.
DO NOT TURN ON LAYERS THAT HAVE BEEN TURNED OFF.
DO NOT THAW LAYERS THAT HAVE BEEN FROZEN.

Client: TRINITY INVESTMENT MANAGEMENT

Project: LANGSTONE TECHNOLOGY PARK
LANGSTONE ROAD
HAVANT, PO9 1SA

Office: NORWICH 01603 305190

Discipline: CIVIL ENGINEERING

Title: INDICATIVE DRAINAGE DETAILS
SHEET 1 OF 2

Scale @ A1: 1:20 UNO

Status: PRELIMINARY

clancy consulting
www.clancy.co.uk
Birmingham 0121 200 7900 . Glasgow 0141 222 7720 . Liverpool 0151 227 5200 . London 020 3077 0870 . Manchester 0161 613 6600 . Newcastle 0191 221 0702 . Norwich 01603 305190 . Prestwick 01292 475375 . Reading 0118 941 7888

Originator	Job Number	Discipline	Building/Zone
CCL	8/1982	C	LAN
Type	**Level**	**Drawing No.**	**Revision**
DET	DRN	400410	P1

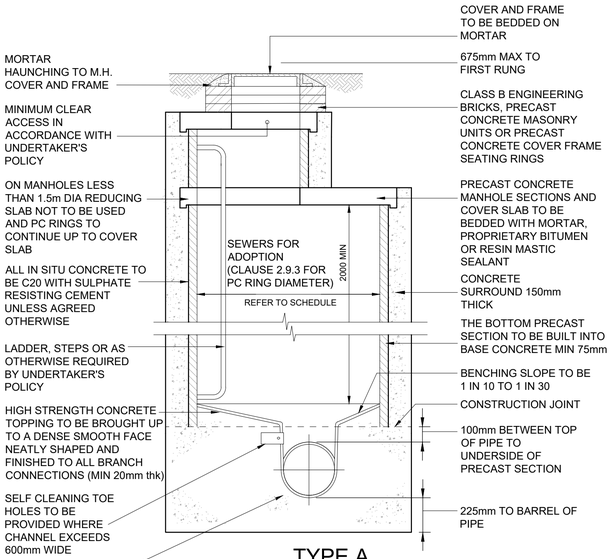

TYPE A
TYPICAL MANHOLE DETAIL
DEPTH 3.0m - 6.0m

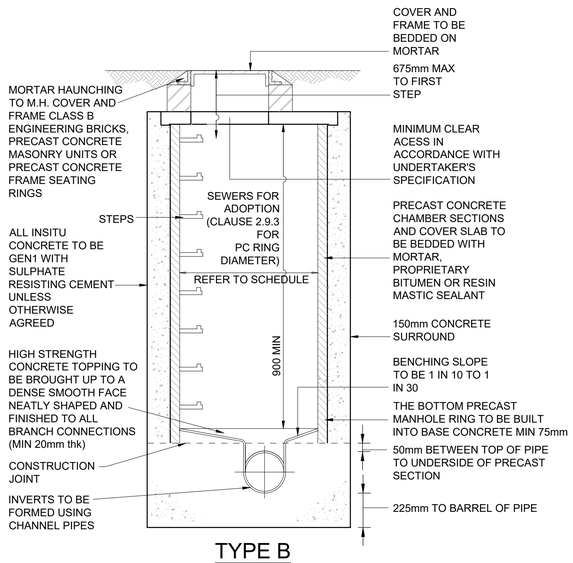

TYPE B
TYPICAL MANHOLE DETAIL
MAX DEPTH OF 3.0m

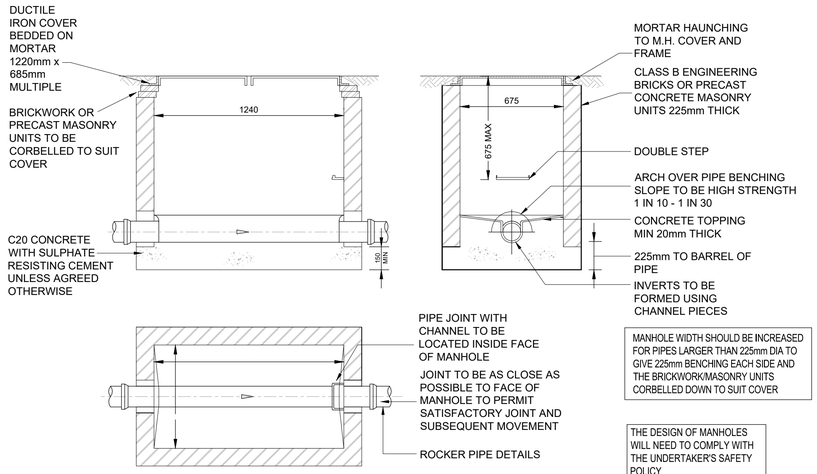

MANHOLE WIDTH SHOULD BE INCREASED FOR PIPES LARGER THAN 225mm DIA TO GIVE 225mm BENCHING EACH SIDE AND THE BRICKWORK/MASONRY UNITS CORBELLED DOWN TO SUIT COVER

THE DESIGN OF MANHOLES WILL NEED TO COMPLY WITH THE UNDERTAKER'S SAFETY POLICY

TYPE C
TYPICAL MANHOLE DETAIL
DEPTH 1.0m - 1.45m

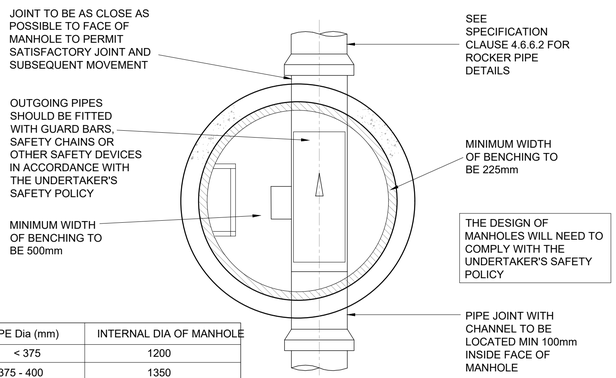

THE DESIGN OF MANHOLES WILL NEED TO COMPLY WITH THE UNDERTAKER'S SAFETY POLICY

PIPE Dia (mm)	INTERNAL DIA OF MANHOLE
< 375	1200
375 - 400	1350
500 - 700	1500
750 - 900	1800
> 900	CONSULT WITH SEWERAGE UNDERTAKER

NOTE: MANHOLE CHAMBER ACCESS TO BE IN ACCORDANCE WITH FIGURE B.7 FROM SEWERS FOR ADOPTION 7 TO ALLOW ADEQUATE ACCESS FOR MAINTENANCE

PRELIMINARY DRAWING

THIS DRAWING IS FOR PRELIMINARY INFORMATION PURPOSES ONLY AND MUST NOT BE READ AS A CONSTRUCTION ISSUE. IT INDICATES DESIGN INTENT ONLY AND IS SUBJECT TO AMENDMENT DURING FINAL DESIGN DEVELOPMENT

Rev	Date	Description	By	Check	App.
P1	19.06.19	PRELIMINARY	CN		

COPYRIGHT: THE COPYRIGHT OF THIS DRAWING IS VESTED IN CLANCY CONSULTING.
IT SHALL NOT BE USED WITHOUT PERMISSION BY ANYONE FOR ANY PURPOSE.
DO NOT SCALE THIS DRAWING ELECTRONICALLY OR MANUALLY.
WORK TO FIGURED DIMENSIONS ONLY.
ALL DIMENSIONS ARE IN MILLIMETRES UNLESS STATED OTHERWISE.
DO NOT TURN ON LAYERS THAT HAVE BEEN TURNED OFF.
DO NOT THAW LAYERS THAT HAVE BEEN FROZEN.

Client: TRINITY INVESTMENT MANAGEMENT

Project: LANGSTONE TECHNOLOGY PARK
LANGSTONE ROAD
HAVANT, PO9 1SA

Office: NORWICH 01603 305190

Discipline: CIVIL ENGINEERING

Title: INDICATIVE DRAINAGE DETAILS
SHEET 2 OF 2

Scale @ A1: 1:20 UNO

Status: PRELIMINARY

clancy consulting

www.clancy.co.uk

Birmingham 0121 200 7800 . Glasgow 0141 222 1720 . Liverpool 0151 227 2000 . London 020 3077 6870 . Manchester 0161 613 6000 . Newcastle 0191 221 2012 . Norwich 01603 305190 . Peterborough 01733 473373 . Reading 0118 941 7888

Originator	Job Number	Discipline	Building/Zone
CCL	8/1982	C	LAN
Type	**Level**	**Drawing No.**	**Revision**
DET	DRN	400411	P1

Downstream Defender®

High-Level Treatment in a Small Footprint

Product Profile

The Downstream Defender® is an advanced vortex separator used to treat stormwater runoff in pretreatment or stand-alone applications. Its unique flow-modifying internal components distinguish the Downstream Defender® from conventional and simple swirl separators that typically bypass untreated peak flows to prevent washout of captured pollutants. Its wide treatment flow range, low headloss, small footprint and low-profile make it a compact and economical solution for capturing nonpoint source pollution.

Components

1. Inlet to Precast Vortex Chamber
2. Cylindrical Baffle
3. Center Shaft
4. Outlet Pipe
5. Sediment Storage Sump
6. Access Lid

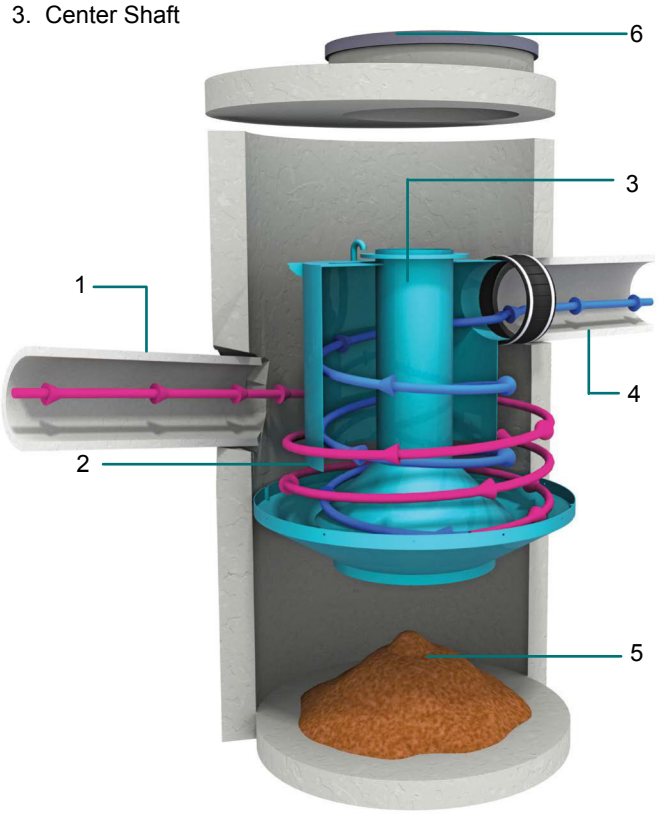

Fig.1 The Downstream Defender® has internal components designed to maximize pollutant capture and minimize pollutant washout.

Applications

- Removal of total suspended solids (TSS), floatable trash and petroleum products from stormwater runoff
- New construction or redevelopment of commercial and residential sites
- Pollutant hotspots such as maintenance yards, parking lots, gas stations, streets, highways, airports and transportation hubs
- Site constrained LID or green infrastructure based developments
- LEED® development projects

Advantages

- Special internal components maximize pollutant capture and minimize footprint, headloss and washout
- Captures and retains a wide range of TSS particles
- High peak treatment flow rates
- Treats the entire storm with no washout or untreated bypass flows
- Low maintenance requirements - no dredging required, and no screens or media to block
- Variable inlet/outlet angles for ease of site layout

How it Works

Advanced hydrodynamic vortex separation is a complex hydraulic process that augments gravity separation with low-energy rotary forces. The flow modifying internal components used in the Downstream Defender® harness the energy from vortex flow and maximize the time for separation to occur while deflecting high scour velocities (**Fig.1**).

Polluted stormwater is introduced tangentially into the side of the precast vortex chamber to establish rotational flow. A cylindrical baffle with an inner center shaft creates an outer (magenta arrow) and inner (blue arrow) spiraling column of flow and ensures maximum residence time for pollutant travel between the inlet and outlet.

Oil, trash and other floating pollutants are captured and stored on the surface of the outer spiraling column. Low energy vortex motion directs sediment into the protected sump region. Only after following a long three-dimensional flow path is the treated stormwater discharged from the outlet pipe. Maintenance ports at ground level provide access for easy inspection and clean-out.

Downstream Defender®

Drainage Profile

The Downstream Defender® is designed with a submerged tangential inlet to minimize turbulence within the device. Turbulence increases system headlosses and reduces performance by keeping pollutant particles in suspension.

The inlet elevation of the Downstream Defender® is located one inlet pipe diameter lower than the elevation of the outlet invert (**Fig.2**). This arrangement ensures that influent flows are introduced to the treatment chamber quiescently below the water surface elevation, minimizing turbulence.

The unique flow-modifying internal components also minimize hydraulic losses. There are no internal weirs or orifices; large clear openings ensure low headloss at peak flow rates with little risk of blockages that cause upstream flooding.

Inspection and Maintenance

Nobody maintains our systems better than we do. To ensure optimal, ongoing device performance, be sure to recommend Hydro International as a preferred service and maintenance provider to your clients.

Call **1 (800) 848-2706** to schedule an inspection and cleanout or learn more at **hydro-int.com/service**

Sizing & Design

The Downstream Defender® can be used to meet a wide range of stormwater treatment objectives. It is available in 5 precast models that fit easily into the drainage network (**Table 1**). Selection and layout of the appropriate Downstream Defender® model depends on site hydraulics, site constraints and local regulations. Both online (**Fig.3a**) and offline (**Fig.3b**) configurations are common.

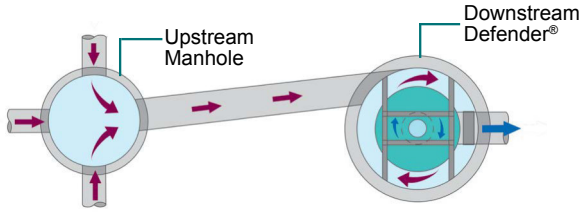

Fig.3a The Downstream Defender® in an online configuration.

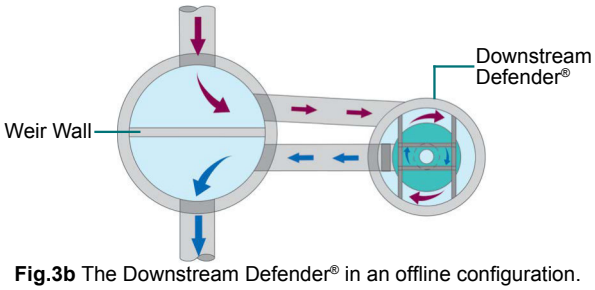

Fig.3b The Downstream Defender® in an offline configuration.

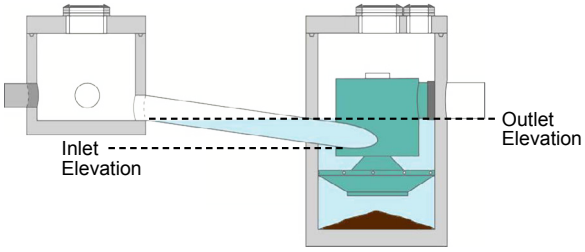

Fig.2 The Downstream Defender® has a submerged inlet that reduces headloss and improves efficiency of pollutant capture.

Free *Stormwater Sizing Tool*

This simple online tool will recommend the best separator, model size and online/offline arrangement based on site-specific data entered by the user.

Go to hydro-int.com/sizing to access the tool.

Table 1. Downstream Defender® Design Chart.

Model Number and Diameter		Peak Treatment Flow Rate		Maximum Pipe Diameter		Oil Storage Capacity		Sediment Storage Capacity		Minimum Distance from Outlet Invert to Top of Rim		Standard Height from Outlet Invert to Sump Floor	
(ft)	(m)	(cfs)	(L/s)	(in)	(mm)	(gal)	(L)	(yd^3)	(m^3)	(ft)	(m)	(ft)	(m)
4	1.2	3.0	85	12	300	70	265	0.70	0.53	2.8	0.85	4.1	1.25
6	1.8	8.0	227	18	450	216	818	2.10	1.61	3.2	0.98	5.9	1.80
8	2.4	15.0	425	24	600	540	2,044	4.65	3.56	4.2	1.28	7.7	2.35
10	3.0	25.0	708	30	750	1,050	3,975	8.70	6.65	5.0	1.52	9.4	2.85
12*	3.7	38.0	1,076	36	900	1,770	6,700	14.70	11.24	5.6	1.71	11.2	3.41

*Not available in all areas. Contact Hydro International for details.

Hydro International, 94 Hutchins Drive, Portland, ME 04102
Tel: (207) 756-6200 Fax: (207) 756-6212
Email: stormwaterinquiry@hydro-int.com Web: www.hydro-int.com

Hydro International®

The **Hydro-Brake®** Flow Control Series

Hydro-Brake® Flood

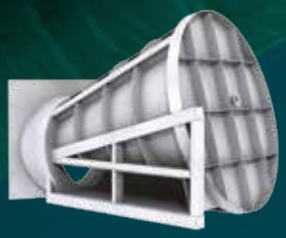

Hydro-Brake® Optimum

Hydro-Brake® Agile

Hydro-Brake® Orifice

The element of control

Stormwater Solutions
Turning Water Around®

The Hydro-Brake® Flow Control Series

A versatile toolbox of precision-engineered devices for surface water, fluvial, foul/combined water, and sewer network flow control.

A Flow Control for Every Site and Budget

Hydro-Brake® Flood

The vortex controlled solution to watercourse flooding.

Hydro-Brake® Optimum

The vortex flow control with no equivalent. Independently verified by BBA and WRc.

Hydro-Brake® Agile

Precision-engineered flow control giving reduced on-site storage for highly constrained applications.

Hydro-Brake® Orifice

The low cost option for unconstrained sites.

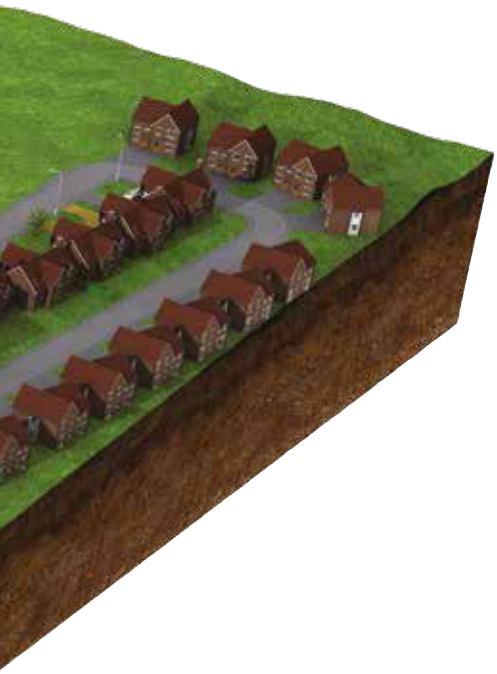

The Element of Control

Hydro International has set the highest standards in flow control technology during more than 35 years of specialist water engineering. When it comes to understanding, predicting and controlling the flow of water, Hydro works with scientific rigour.

Our customers are constantly challenged to deliver imaginative solutions, despite tough commercial and physical constraints. Committed to precision in product development and manufacture, we partner with you to engineer the best-possible water management solutions.

Hydro International's unrivalled knowledge and outstanding technical design support give our customers complete reassurance of system performance and value.

We give you the element of control.

Precision-Engineered for Reliable, Repeatable Performance

The Hydro-Brake® Flow Control Series offers a comprehensive choice for sustainable, performance-optimised attenuation and control whatever the project. Fully scalable and adaptable to your site conditions, there is no need to compromise on your project requirements.

All Hydro International flow controls are manufactured to the same exacting standards of quality. Tested, proven and independently accredited by regulatory bodies across the world, they offer the reassurance of reliable, repeatable performance.

Technical Design Support

Faced with increasingly varied environmental and planning stipulations, engineers need to adapt their solutions accordingly and balance flow rates with storage requirements and optimise the drainage system performance over the duration of a storm. In these circumstances, Hydro International's expert design support can advise on the correct flow control selection and design.

A full range of technical services, including detailed hydraulic modelling, easy-to-use design tools and integration into industry-standard software, all help engineers to achieve optimum hydraulic performance.

Buildable, Maintainable, Adoptable

Hydro International flow controls are designed and manufactured for ease of installation and reliable through-life performance with minimum intervention. Simple, predictable, low-maintenance regimes make them straightforward for management organisations to take on, and remove any concerns for adopting authorities.

Hydro-Brake® Flood

Hydro-Brake® Flood is a highly sustainable, precision-engineered vortex technology for preventing watercourse flooding.

Hydro-Brake® Flood flow controls have been installed at the heart of low-maintenance, self-activating flood defences since the 1990s, and now protect more than 6,000 properties from an estimated £200m of flood damage in pioneering schemes across the UK.

Watercourse flood prevention

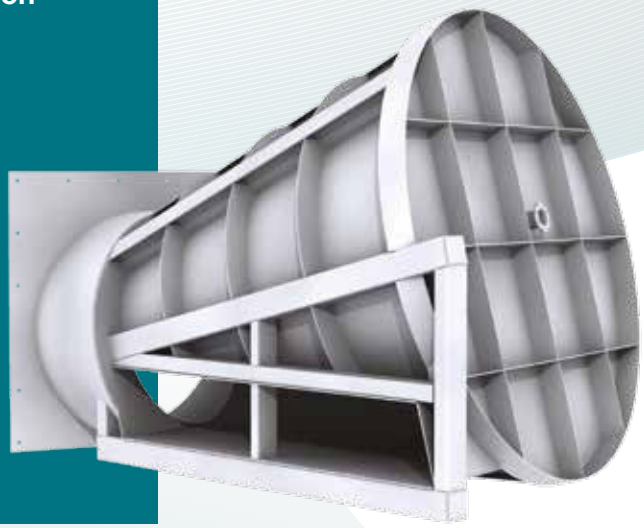

- ✓ No external power.
- ✓ No moving parts.
- ✓ Upstream flood storage minimised.
- ✓ Minimal maintenance.

Bespoke, Precision Engineering

Each Hydro-Brake® Flood is a bespoke solution that precisely manages watercourse flows, right up to major dams with pass forward flow rates of 30 m³/s. The same technology is used just as successfully in smaller, dispersed schemes.

Each Hydro-Brake® Flood scheme is purpose-designed to optimise flow control performance characteristics and precisely calculate the amount of upstream storage required. Using Hydro-Brake® Flood vortex technology can reduce the volume of floodwater to be stored by up to 30% compared to fixed orifice controls.

A Simple, Elegant Solution

The internal geometry of Hydro-Brake® Flood is designed so that water can flow through it without restriction for as long as possible, minimising the upstream storage required. A self-activating vortex is created when the water reaches the pre-determined hydraulic head, holding back excess water, and releasing it at a controlled rate.

Expert Design and Manufacture

Designing fluvial interventions, whether on a large or small scale, requires expert engineering and hydraulic modelling in line with the flood risk management strategy. Hydro International can support with detailed design using Computational Fluid Dynamics and structural design using Finite Element Analysis, scale testing and production of detailed design drawings and specifications.

Hydro-Brake® Flood vortex flow controls are manufactured in high-grade stainless steel to be structurally fit-for-purpose, using modern production and control methods to ensure the design and performance objectives are delivered.

Low Impact, Minimal Maintenance

The Hydro-Brake® Flood has a large open area at all flow rates, resulting in a low risk of blockages. With no power or moving parts, the flow controls require minimal operational attention and maintenance.

Future-Proofed

Hydro-Brake® Flood schemes can be designed to allow for future variances in fluvial flows. A facility for future adjustment to allow for climate change can be incorporated without necessitating new engineering or construction works.

Monitoring

Flood alleviation at the fluvial level can be demonstrated to deliver a level of protection that is worth far more than the project costs. We can offer support and advice on post-installation monitoring of the value of the intervention.

Case Studies

Flood Prevention Scheme Protects 1,750 Properties in Glasgow

Glasgow City Council's £53 m White Cart Water Flood Prevention scheme protects 1,750 properties in the south of the city. Normally a shallow river, White Cart Water is prone to flash flooding. As little as twelve hours of rain can cause water levels to rise by six metres.

New manufacturing and installation techniques were developed as part of the project that saw the world's five largest-ever Hydro-Brake® Flood vortex flow controls installed in 3 dams in the highlands above the city. The final scheme controls flow rates and velocities up to a 1 in 200 year flood event, with a 45% maximum reduction in peak flows, holding back more than 2.5 billion litres of floodwater in upstream storage areas that make best use of the natural environment.

Vortex Technology Protects Northallerton Homes and Businesses

In the North Yorkshire town of Northallerton, a £3.1 million flood alleviation scheme is using Hydro-Brake® Flood technology to protect 170 homes and businesses. Two large Hydro-Brake® Flood vortex flow controls were installed in refurbished culverts on town's outskirts.

They enable excess water to be held back in specially-built flood storage basins. Before the scheme was built, excess floodwaters could overtop the watercourse in the agricultural land on its approach to the culverts sending flows to cause flooding in the east of the town. Hydro International carefully-sized the flow controls to minimise upstream storage requirements.

Hydro-Brake® Flood Selection Criteria

Suitability:	For rivers & watercourses; Flood storage reservoirs		
Flow Range (l/s)	Head Range (m)	Ability to match greenfield discharge rate	On-site water storage requirement
550 – 12,000 *	1.5 – 10 *	n/a	Low
Moving Parts?	External Power?	Risk of blockage?	
No	No	Very low	

* higher flows and heads may be possible (contact Hydro International to discuss)

Hydro-Brake® Optimum

The Hydro-Brake® Optimum is Hydro International's flagship passive flow control device and the most advanced vortex flow control available.

Hydro-Brake® Optimum is the only vortex flow control for which the head and discharge relationship can be fine-tuned to optimise your design. Designers can size a Hydro-Brake® Optimum to achieve the perfect hydraulic performance curve and engineer the best possible passive flow control performance.

Surface water management and SuDS | **Combined drainage systems and CSOs** | **Watercourse flood prevention** | **Sewer network optimisation** | **Wastewater treatment plants**

- ✓ No external energy source.
- ✓ No moving parts.
- ✓ Future-proof.
- ✓ Large outlet clearances prevent blockages.

There is No Equivalent

Hydro-Brake® Optimum dispenses with the need to choose from a range of sizes and types and instead offers built-in flexibility to size each unit for absolute fit. Each Hydro-Brake Optimum® is individually-sized, so you achieve performance without compromise for every project.

Maximise Storage Savings

The increased hydraulic efficiency of the Hydro-Brake® Optimum means you can reduce on-site storage by up to 15% than if an alternative vortex control is used. With reduced storage, you can lower construction and excavation costs as well as saving project time and overall land-use.

Best Value for Every Project

Selecting the superior performance of Hydro-Brake® Optimum does not mean a higher cost for your project. On the contrary, because your upstream storage can be fine-tuned to achieve the smallest volumes, construction, excavation and material costs are reduced.

Easy to Install

Hydro-Brake® Optimum comes with a range of installation options and accessories to make construction and installation as simple as possible.

Setting the Standard

The Hydro-Brake® Optimum is the culmination of more than 35 years of research and development by Hydro International, and the company continues to take an international lead in vortex technology and expertise. Hydro-Brake® Optimum is the only vortex flow control to be independently certified by BBA and WRc.

BBA APPROVAL INSPECTION TESTING CERTIFICATION

WRc Approved PT/329/0412

Minimal Maintenance

With up to 20% larger outlet clearances compared to other vortex devices, there is significantly less risk of blockage with a Hydro-Brake® Optimum. With no power source or moving parts, it offers minimal, predictable maintenance.

Future-Proofed

Hydro-Brake® Optimum can be supplied with an adjustable inlet so flows can be altered by up to 40% post-installation, to allow for future changes in operating conditions, for example as a result of site expansion or climate change.

Flow Control Chamber

A Hydro-Brake® Optimum flow control can be supplied prefitted in a precast reinforced concrete chamber. Custom options including high level emergency bypass, rodding pipe and removable units are also available.

Case Studies

Tight Fit for New Homes

Engineers challenged to solve a “tight fit” surface water management challenge on a West Yorkshire housing development used the Hydro-Brake® Optimum Design Tool to calculate a solution that optimised the limited pipe storage area. Using conventional flow control devices would have required more back up storage than would fit in the space available, but by using Hydro-Brake® Optimum flood protection measures, challenging discharge limits were met for a 1 in 100 year storm.

‘Optimum’ Savings for Developer with 21st Century Drainage

The first phase of Edinburgh City Council’s 21st Century Homes project, the Gracemount development showcases sustainable construction. A major feature of the drainage solution is Hydro International’s high performance Hydro-Brake Optimum® to control surface water which saved the developers over 30% in storage construction costs.

Photo courtesy of Edinburgh City Council

Hydro-Brake® Optimum Selection Criteria

Suitability:	Most sites, from very low to very high flow rates		
Flow Range (l/s)	Head Range (m)	Ability to match greenfield discharge rate	On-site water storage requirement
0.7 – 550 *	0.4 – 4.0	Very good	Low
Moving Parts?	External Power?	Risk of blockage?	
No	No	Very low	

* lower flows may be possible (contact Hydro International to discuss)

Explore the Options with our Online Design Tool

Hydro-Brake® Optimum Flow Control Design Tool is an online sizing engine that gives you the flexibility to compare flow control design options, output detailed design drawings and hydraulic data and import the results into commercially-available hydraulic modelling software.

www.hydrobrakeoptimum.com

Hydro-Brake® Hotline: 01275 337937
hydrobrake@hydro-int.com

Hydro-Brake® Agile

The Hydro-Brake® Agile flow control delivers precision engineering with best value for even the most constrained sites.

The Hydro-Brake® Agile flow control is a float-activated flow control that maintains a constant discharge to deliver precise performance over a wide range of heads. It is ideally suited to applications with constrained discharge requirements or where the flood storage area available through attenuation is very limited.

Surface water management and SuDS | **Combined drainage systems and CSOs** | **Watercourse flood prevention** | **Sewer network optimisation** | **Wastewater treatment plants**

- ✓ No external energy source.
- ✓ Rapid drain-down provides resilience to subsequent rainfall events.
- ✓ Future-proof – simple adjustments possible for future changes in operating conditions.
- ✓ Repeatable, predictable maintenance regime.

Meet Stringent Discharge Consents

Designing flood storage, whether above or below ground, is dependent on the rate at which excess water can be controlled and discharged. The Hydro-Brake® Agile flow control is the only flow control design that achieves a constant rate of discharge and therefore the minimum possible upstream storage.

Whether controlling surface water on a housing development, or regulating flows in a wastewater treatment works, investment in a precision-engineered device can result in considerable savings in total project costs.

Sustainable Solution

The Hydro-Brake® Agile flow control provides sustainable control of flood storage without the need for external power sources or control circuits. Simple adjustments can be made to future-proof the device to allow for climate change.

Quality Manufacture

The Hydro-Brake® Agile flow control is precision-engineered using high-grade stainless steel with long-life, durable components and CE marked in accordance with the EU Machinery Directive (2006/42/EC). Manufactured in the UK, the flow control can be transported quickly to site to meet project timescales.

Easy to Install and Maintain

During dry weather periods, and especially during the first flush of a storm, the outlet area is at its largest, reducing the risk of blockages.

In the event of a blockage, an integrated release mechanism can be operated from surface level, enabling the gate to be fully opened and returned to its operating position.

Hydro-Brake® Agile Flow Control Chamber

The Hydro-Brake® Agile flow control can be supplied pre-fitted in a precast reinforced concrete chamber for quick and easy installation on site.

A range of outlet pipe sizes is also available to suit site requirements. Once lifted into position, the connecting pipework can be connected and a cover slab installed. To suit the location and invert required, the chamber depth can be easily varied with concrete rings.

Example Solutions

Constrained Space

For an urban in-fill housing project in a heavily-developed inner city area, the design team were keen to deliver an effective drainage strategy. However, there was limited space available, conflicting demands from new and existing services, and an existing drainage infrastructure with very limited capacity to accept additional flows.

Using a flow control that provided a near-constant discharge rate within the parameters of the available downstream capacity, the surface water was moved off-site as quickly and effectively as possible, enabling the on-site storage to be reduced to a level that could be accommodated in the heavily constrained space available.

Constant Discharge

Providing temporary flood storage through attenuation was the solution to a known surface water flooding problem. A flow control was needed to limit flow to the existing drainage network, with the excess rainwater overflowing into an off-line attenuation tank. Implementation costs had to be kept to an absolute minimum or the project may not have been feasible. In addition, any surcharge to the upstream drainage network would have moved flooding to a different part of the catchment.

A constant discharge flow control was therefore used to pass forward an appropriate amount of flow at all times, minimising pressure on the upstream network and only putting floodwater into the attenuation structure when absolutely necessary.

Hydro-Brake® Agile Selection Criteria

Suitability:	Constrained sites with stringent discharge consents		
Flow Range (l/s)	Head Range (m)	Ability to match greenfield discharge rate	On-site water storage requirement
4.5 – 100	0.4 – 2.4	Good	Very low
Moving Parts?	External Power?	Risk of blockage?	
Yes	No	Not suited to all sites	

Hydro-Brake® Orifice

The Hydro-Brake® Orifice delivers cost-effective, precise, repeatable flow control and is suitable for unconstrained sites with generous discharge consents

The Hydro-Brake® Orifice is a precision-cut, sharp-edged orifice plate flow control, available in a broad range of configurations. A low-cost, low-complexity flow control, it is the ideal choice where there is minimal limitation on space available for on-site flood storage and attenuation, or where there are generous discharge consents.

Surface water management and SuDS

Watercourse flood prevention

Sewer network optimisation

Flexible and Versatile

Already trusted as part of Hydro International's family of precision-engineered flow control devices, the Hydro-Brake® Orifice can be designed and manufactured to meet a wide variety of configurations. With the Hydro-Brake® Orifice there is no need to compromise on your project needs.

Configured for Each Site

Each Hydro-Brake® Orifice is manufactured to suit the precise hydraulic requirements specified for the application. Our experienced professional engineering team will work with you to understand the needs of your site and recommend the best solution.

A wide variety of configurations and mounting options is available, for example integrated mesh guards, curve mount, pipe inserts and slide- or pivot-mounts. Hydro International can advise on sizing and flow rates and recommend the best solution for your site.

Quality Manufacture

The Hydro-Brake® Orifice is manufactured from high-grade stainless steel under strict Quality Assurance to the exacting methods and tolerances set out in the international standard BS EN IS0 5167-2: 2003.

Simple to Install

The Hydro-Brake® Orifice is simple to install. It can also be supplied pre-fitted in a precast reinforced concrete chamber for 'plug-and-play' installation on site.

Resilience by Design

The Hydro-Brake® Orifice can be supplied with integrated protection against the risk of blockages. Alternatively, the Hydro-Brake® Orifice can be mounted on moveable or removable structures to allow for manual intervention to drain the control chamber from surface level and clear any blockages that do occur.

Hydro-Brake® Orifice Selection Criteria

Suitability:	Unconstrained sites with generous discharge consents		
Flow Range (l/s)	Head Range (m)	Ability to match greenfield discharge rate	On-site water storage requirement
2.5 – 100 *	0.25 – 2.0 *	Not suited to all sites	Unconstrained
Moving Parts?	External Power?	Risk of blockage?	
No	No	Not suited to all sites	

* flows and heads may be possible outside of these ranges (contact Hydro International to discuss)

Hydro-Brake® Flow Control Series Selection Guide

The Hydro-Brake® Flow Control Series is a versatile toolbox for surface water, fluvial, foul water, and sewer network flow control. No matter what the site and budget, every flow control offers the same precision-engineered performance.

Features	Hydro-Brake® Flood	Hydro-Brake® Optimum	Hydro-Brake® Agile	Hydro-Brake® Orifice
Suitability	For watercourses; Flood storage reservoirs	Most sites, from very low to very high flow rates	Constrained sites with stringent discharge consents	Unconstrained sites with generous discharge consents
Flow Range (l/s) *	550 – 12,000	0.7 – 550	4.5 – 100	2.5 – 100
Head Range (m) *	1.5 – 10	0.4 – 4.0	0.4 – 2.4	0.25 – 2.0
Ability to Match Greenfield Discharge Rate	n/a	Very good	Good	Not suited to all sites
Moving Parts	No	No	Yes	No
External Power Requirement	No	No	No	No
Constant Discharge	No	No	Yes	No
On-site Storage	Low	Low	Very low	Unconstrained
Risk of Blockage	Very low	Very low	Not suited to all sites	Not suited to all sites

* flows and heads outside of these ranges may be possible (contact Hydro International to discuss)

Expert Design Support

No matter how big or small the project, Hydro International's professional engineers are on hand to provide free support to designers and specifiers to aid with the correct selection and configuration of Hydro flow controls for each project design.

Our dedicated design support team advises on best-practice sizing, flow and storage calculations for the Hydro-Brake® Flow Control Series within your surface water, fluvial, sewer or wastewater plant design.

Consultancy

Hydro International's Consultancy team is available for civil engineering, flood risk management and hydraulic system modelling for new and retrofit development, fluvial or wastewater treatment plant projects.

Documentation

Our dedicated design support team can assist with the output of hydraulic data to support your system design and dimensioned installation drawings, as well as advising on successful integration with other Hydro International water treatment and storage products.

Call the Hydro-Brake® Hotline 01275 337937 or email hydrobrake@hydro-int.com.

For Flow Control Product and Design Advice:

Tel: 01275 337937

Email: hydrobrake@hydro-int.com

Hydro-Brake® Flow Control Series

Shearwater House
Clevedon Hall Estate
Victoria Road, Clevedon
BS21 7RD

Tel: **01275 878371**
Fax: **01275 874979**

www.hydro-int.com

Turning Water Around...®

Rev C/0117

APPENDIX F

Borehole Logs

Borehole Location Log

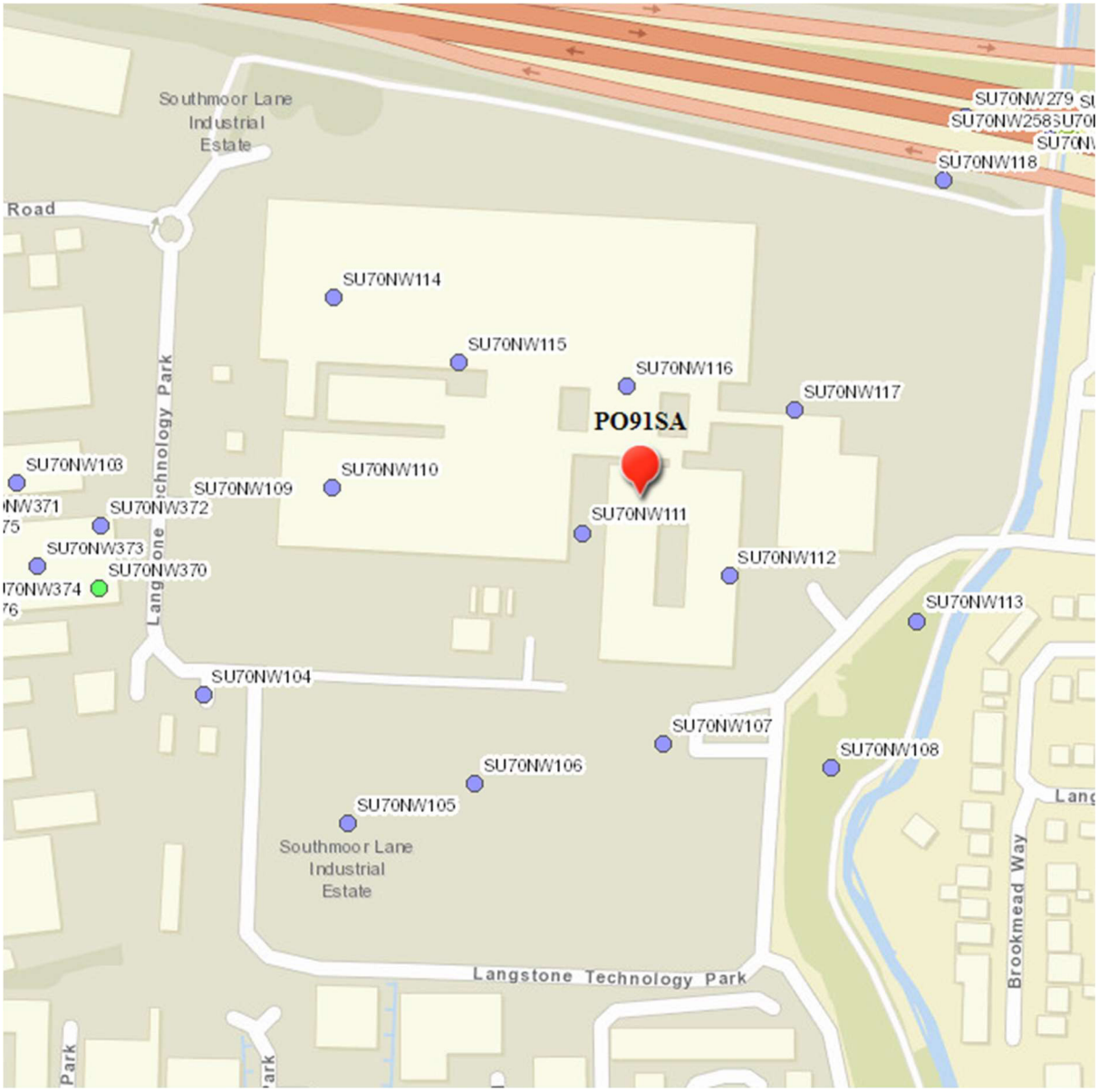

SU70NW118

I.B.M.

PROPOSED DEVELOPMENT AT BROOKSIDE ROAD, HAVANT, HAMPSHIRE

RECORD OF BOREHOLE No. 20

Type of Boring: Shell and auger

Dia. of boring: 6in. to 16ft 6in.

Lining tubes: 6in. to 16ft

SU70NW/118

7147 0587

Ground level: 5·18m 17·0' O.D.

Date started: 15-11-66

Date completed: 16-11-66

Date and Depth of Boring	Depth of Casing	Water Level	Samples: Depth	Samples: Type	Change of Strata: Legend	Change of Strata: Depth	Change of Strata: Reduced Level	Description of Strata
15-11-66	nil		1' 0"	D		1' 6"	15·5'	Brown PEAT
3' 0"	nil	▽	2' 0"-3' 0"	C(12)				Medium dense flint GRAVEL with some light grey-brown silty clay
	4' 0"		5' 0"-6' 0"	C(19)		4' 6"	12·5'	
	7' 0" 9' 0"	8' 9"	8' 0"-9' 0"	C(20) W				Medium dense flint GRAVEL with traces of chalk
	9' 0"		10' 0"-11' 0"	C(45)				
	11' 6" 11' 6"		11' 9" 12' 0"-13' 6"	D U4(115)		11' 6"	5·5'	
15' 0"	13' 0"	10' 0"	14' 0"-15' 0"	C(21)				Chalk COBBLES in a matrix of firm putty chalk
16-11-66 16' 6"	16' 0"	8' 0" 11' 8"	16' 0"	D				
	16' 0"		17' 0"-18' 0"	C(12)				

END OF BOREHOLE
Depth: 16ft 6in.
Elevation: 0·5' O.D.

Key

▽ denotes ground-water first encountered
U4( ) .. 4 in. dia. undisturbed sample
U1½( ) .. 1½ in. .. .. ..
D .. disturbed sample
B .. bulk sample
W .. water sample
S( ) .. standard penetration test
C( ) .. cone penetration test
(24) .. number of blows
• .. sample not recovered

Remarks

Scale: 1 in. = 8 Ft.

FIG. 21

Form No. 190 (Revised 9/65)

Morpeth Ridgway Limited

Site Investigation Division

British Geological Survey

SU70NW117

I.B.M.

PROPOSED DEVELOPMENT AT BROOKSIDE ROAD, HAVANT, HAMPSHIRE

RECORD OF BOREHOLE No. 14

Type of Boring: Shell and auger

Dia. of boring: 8in. to 18 ft. 6in.

Lining tubes: 8in. to 14 ft. 6in.

SU70NW/117

7140 0576

Ground level: 15·4' O.D. (4-69)

Date started: 1-11-66

Date completed: 1-11-66

Date and Depth of Boring	Depth of Casing	Water Level	Samples: Depth	Samples: Type	Change of Strata: Legend	Change of Strata: Depth	Change of Strata: Reduced Level	Description of Strata
1-11-66	nil		1' 6"	D		2' 6"	12·9'	Topsoil
5' 0"	11' 0" 5' 0"	▽	4' 0" - 5' 0" 5' 0" - 5' 0"	C(45) B				
	5' 6"	5' 0"	6' 6"	W				Dense flint GRAVEL with traces of chalk
	7' 0"		7' 6" - 8' 6"	C(50)				
	10' 0" 11' 0"		10' 6" - 11' 6" 10' 0" - 11' 0"	C(20) B				
	15' 0"		15' 6" - 14' 6"	C(34)		15' 6"	1·9'	
16' 6"	14' 6"	14' 6"	15' 0" - 16' 6"	U4(67)				Chalk COBBLES in a matrix of firm putty chalk

END OF BOREHOLE
Depth: 16 ft. 6in.
Elevation: -1·1' O.D.

Key

▽ denotes ground-water first encountered
U4( ) " 4 in. dia. undisturbed sample
U1½( ) " 1½ in. " " "
D " disturbed sample
B " bulk sample
W " water sample
S( ) " standard penetration test
C( ) " cone penetration test
(24) " number of blows
• " sample not recovered

Remarks

Scale: 1 in. = 8 Ft.

FIG. 15

Form No. 190 (Revised 9/65)

Morples Ridgway Limited

Site Investigation Division

British Geological Survey

SU70NW107

I.B.M.

PROPOSED DEVELOPMENT AT BROOKSIDE ROAD, HAVANT, HAMPSHIRE

RECORD OF BOREHOLE No. 4

Type of Boring: Shell and auger
Dia. of boring: 8in. to 28ft.
Lining tubes: 6in. to 27ft.

SU 70NW/107
7134 0560

Ground level: 13·2' O.D. (4.02m)
Date started: 11-11-66
Date completed: 12-11-66

Date and Depth of Boring	Depth of Casing	Water Level	Samples: Depth	Samples: Type	Change of Strata: Legend	Change of Strata: Depth	Change of Strata: Reduced Level	Description of Strata
11-11-66								Topsoil
	nil		1' 6"	D		1' 6"	11·7'	
	nil		2' 6" - 3' 6"	C(20)				Firm dark grey calcareous silty CLAY with gravel
3' 0"	nil	▽	4' 0"	D		3' 0"	9·3'	
	4' 0"		5' 0" - 6' 0"	C(45)				Dense flint GRAVEL with grey sand
	5' 0"		6' 0" - 7' 0"	C(31)				
	6' 0"	6' 6"	7' 6"	W		9' 0"	4·2'	
	6' 0"		7' 6"	D				
	9' 6"		10' 6" - 11' 6"	C(65)				Very dense flint GRAVEL with some brown clayey fine sand
	12' 0"		12' 0"	D		11' 9"	1·5'	
	12' 0"		13' 0" - 14' 0"	S(16)				Firm light grey CLAY and brown sandy CLAY with traces of chalk
	13' 6"		13' 6"	B		14' 0"	-0·8'	
	14' 0"		15' 0" - 16' 0"	C(29)				4·3m.
	16' 6"		17' 6" - 18' 6"	C(30)				VMCk
20' 6"	18' 6"	12' 0"	19' 0" - 20' 6"	U4(28)				Chalk COBBLES in a matrix of firm putty chalk with occasional flints
12-11-66	20' 0"	5' 6"	21' 0" - 22' 0"	C(18)				
	23' 0"		24' 0" - 25' 0"	C(12)				
26' 0"	24' 0"	5' 0"	27' 0" - 28' 0"	C(21)				8·5m.
	27' 0"							

END OF BOREHOLE
Depth: 28ft.
Elevation: -14·8' O.D.

R.J.W.
20.10.83

Key

▽ denotes ground-water first encountered
U4( ) .. 4 in. dia. undisturbed sample
U1½( ) .. 1½ in. .. .. ..
D .. disturbed sample
B .. bulk sample
W .. water sample
S( ) .. standard penetration test
C( ) .. cone penetration test
(24) .. number of blows
• .. sample not recovered

Remarks

Scale: 1 in. = 8 Ft.

FIG. 5

Form No. 190 (Revised 9/65)

Murphies Ridgway Limited

Site Investigation Divisi

British Geological Survey

SU70NW106

I.B.M.
PROPOSED DEVELOPMENT AT BROOKSIDE ROAD, HAVANT, HAMPSHIRE

RECORD OF BOREHOLE No. 3

Type of Boring: Shell and auger
Dia. of boring: 8in. to 16ft.
Lining tubes: 8in. to 15ft. 6in.

SU70NW/106
71250558

Ground level: 11·9' O.D.
Date started: 10-11-66
Date completed: 10-11-66

Date and Depth of Boring	Depth of Casing	Water Level	Samples: Depth	Samples: Type	Change of Strata: Legend	Change of Strata: Depth	Change of Strata: Reduced Level	Description of Strata
10-11-66	nil		1' 3"	D		1' 0"	10·9'	Soft dark grey CLAY with topsoil and decayed vegetation
	nil		1' 6" - 3' 0"	U4(50)				Soft dark grey SILT with some peat
	nil		4' 5"	D		4' 0"	7·9'	
	nil		5' 0" - 6' 0"	S(8)				Soft light grey clayey SAND with some gravel
7' 0"	7' 0"	⊻ 2' 6"	7' 0"	D & W		6' 6"	5·4'	
	7' 0"		8' 0" - 9' 0"	C(64)				Dense flint GRAVEL with some chalk
	8' 0"		8' 0" - 10' 6"	B				
	10' 0"		11' 0" - 12' 0"	C(55)				
	12' 6"		12' 9"	D		12' 6"	- ·6'	
	12' 6"		13' 6" - 14' 6"	C(26)				Chalk COBBLES in a matrix of firm putty chalk with some flints
16' 0"	16' 6"	1' 0"	14' 0" - 16' 0"	B				
	16' 6"		16' 0"	D				
	16' 6"		16' 6" - 17' 6"	C(36)				

END OF BOREHOLE
Depth: 16ft.
Elevation: -4·1' O.D.

R.JW
20-10-83

Key

⊻ denotes ground-water first encountered
U4( ) „ 4 in. dia. undisturbed sample
U1½( ) „ 1½ in. „ „ „
D „ disturbed sample
B „ bulk sample
W „ water sample
S( ) „ standard penetration test
C( ) „ cone penetration test
(24) „ number of blows
* „ sample not recovered

Remarks

Scale: 1 in. = 8 Ft.

FIG. 4

Form No. 190 (Revised 9/65)

Marples Ridgway Limited

Site Investigation Division

British Geological Survey

SU70NW105

I.B.M.
PROPOSED DEVELOPMENT AT BROOKSIDE ROAD, HAVANT, HAMPSHIRE

RECORD OF BOREHOLE No. 2

Type of Boring: Shell and auger
Dia. of boring: 8in. to 17ft. 6in.
Lining tubes: 8in. to 17ft.

SU70NW/105
7119 0556

Ground level: 12·9' O.D. 3.93m
Date started: 9-11-66
Date completed: 9-11-66

Date and Depth of Boring	Depth of Casing	Water Level	Samples: Depth	Samples: Type	Change of Strata: Legend	Change of Strata: Depth	Change of Strata: Reduced Level	Description of Strata
9-11-66								Topsoil
	nil		1' 6"	D		1' 3"	11·7'	
	nil		1' 6" - 3' 0"	U4(75)				Firm brown sandy CLAY with medium gravel and traces of chalk BE 2.0m
	nil		5' 0" - 6' 0"	C(20)				
7' 0"	6' 6"	⊻	6' 9"	D		6' 6"	6·4'	
	6' 6"		7' 6" - 8' 6"	C(45)				Dense flint GRAVEL with some putty chalk
	9' 0"		9' 9"	D		9' 6"	3·4'	
	10' 0"		10' 6" - 12' 0"	U4(84)				Firm grey CLAY and brown sandy CLAY with traces of chalk and flints Bg
	10' 0"		12' 0" - 14' 0"	B		14' 6"	-1·6'	
	15' 6"		14' 6" - 15' 6"	C(51)				Firm putty CHALK with flints UMCK 5.3m
17' 6"	15' 6"	4' 6"	16' 0" - 17' 6"	U4( ) *				
	15' 6"		16' 0" - 17' 6"	B & W				
	17' 0"		18' 0" - 19' 0"	C(82)				

END OF BOREHOLE
Depth: 17ft. 6in.
Elevation: -4·6' O.D.

C.J.W.
20.10.83

Key

⊻ denotes ground-water first encountered
U4( ) " 4 in. dia. undisturbed sample
U1½( ) " 1½ in. " " "
D " disturbed sample
B " bulk sample
W " water sample
S( ) " standard penetration test
C( ) " cone penetration test
(24) " number of blows
* " sample not recovered

Remarks

Scale: 1 in. = 8 Ft.

FIG. 3

Form No. 190 (Revised 9/65)

Murphy Ridgway Limited

Site Investigation Division

British Geological Survey

SU70NW104

I.B.M.
PROPOSED DEVELOPMENT AT BROOKSIDE ROAD, HAVANT, HAMPSHIRE

SU70NW/104
7112 0562

RECORD OF BOREHOLE No. 1

Type of Boring: Shell and auger
Dia. of boring: 8in. to 19ft. 6in.
Lining tubes: 8in. to 19ft.

Ground level: 14·1' O.D. 4·30m
Date started: 5-11-66
Date completed: 8-11-66

Date and Depth of Boring	Depth of Casing	Water Level	Samples: Depth	Samples: Type	Change of Strata: Legend	Change of Strata: Depth	Change of Strata: Reduced Level	Description of Strata
5-11-66								Topsoil
	nil		1' 6"	D		1' 0"	15·1'	
	nil		2' 6" - 5' 6"	C(65)				Firm brown sandy CLAY with gravel
	nil		4' 3"	D		4' 0"	10·1'	
6' 0"	4' 3" / 5' 0"	5' 9"	5' 0" - 6' 0" / 4' 6" - 5' 0"	C(57) / B		6' 0"	8·1'	Firm brown putty CHALK with flints and firm brown CLAY with fine gravel
8-11-66		5' 9"						
	7' 0"		8' 0" - 9' 0"	C(15)				
	10' 0" / 12' 0" / 13' 0"	7' 3"	11' 0" - 12' 0" / 12' 0" / 10' 6" - 13' 0"	C(29) / W / B				Dense flint GRAVEL with some firm putty chalk
	13' 0"		14' 0" - 15' 0"	C(45)				
	16' 0"		17' 0" - 18' 0"	C(32)				
19' 6"	19' 0"	5' 0"	19' 6"	D				
	19' 0"		20' 0" - 21' 0"	C(42)				

BE
1·2m.
Cg
5·8m

END OF BOREHOLE
Depth: 19ft. 6in.
Elevation: -5·4' O.D.

R.T.W.
2.10.83

Key

- ⊻ denotes ground-water first encountered
- U4( ) .. 4 in. dia. undisturbed sample
- U1½( ) .. 1½ in. .. .. ..
- D .. disturbed sample
- B .. bulk sample
- W .. water sample
- S( ) .. standard penetration test
- C( ) .. cone penetration test
- (24) .. number of blows
- • .. sample not recovered

Remarks

A standpipe was installed at a depth of 10ft. 6in. below ground level.

Scale: 1 in. = 8 Ft.

FIG. 2

Form No. 190 (Revised 9/63)

Morpiss Ridgway Limited

Site Investigation Division

British Geological Survey

SU70NW109

I.B.M.
PROPOSED DEVELOPMENT AT BROOKSIDE ROAD, HAVANT, HAMPSHIRE

RECORD OF BOREHOLE No. 6

Type of Boring: Shell and auger
Dia. of boring: 8in. to 18ft. 6in.
Lining tubes: 8in. to 15ft. 6in.

SU 70NW/109
7111057.1

Ground level: 13·9' O.D. (4·24m)
Date started: 10-11-66
Date completed: 10-11-66

Date and Depth of Boring	Depth of Casing	Water Level	Samples: Depth	Samples: Type	Change of Strata: Legend	Change of Strata: Depth	Change of Strata: Reduced Level	Description of Strata
10-11-66	nil		1' 6"	D		1' 6"	12·4'	Topsoil
	5' 0" 5' 0"		5' 0" - 5' 6" 5' 0" - 4' 6"	D U4(51)*		4' 9"	9·2'	Soft brown silty CLAY BE
	5' 0"		5' 6"	D		6' 0"	7·9'	Very soft light grey-brown silty CLAY with gravel and traces of chalk 1·8m
6' 6"	6' 6" 7' 0" 8' 6"	▼ 6' 6"	7' 6" 7' 6" - 8' 6" 7' 0" - 8' 6"	W C(58) B		10' 0" 10' 6"	5·9' 5·4'	Dense flint GRAVEL Soft brown sandy CLAY with flints
	10' 0"		10' 6" - 11' 6"	C(89)		13' 0"	0·9'	Very dense flint GRAVEL with some light brown sandy clay and traces of chalk Cg
	13' 0" 13' 0"		13' 6" - 14' 6" 13' 0" - 14' 6"	C(57) B		16' 0"	-2·1'	Firm brown putty CHALK with flints and firm brown CLAY with fine gravel 4·9m
	15' 0"		15' 0" - 16' 6"	U4(128)				Chalk COBBLES in a matrix of firm putty chalk UMGK 5·6m
18' 6"	15' 6" 15' 6"	4' 6"	17' 6" - 18' 6" 18' 6"	C(60) D				

END OF BOREHOLE
Depth: 18ft. 6in.
Elevation: -4·6' O.D.

R.J.W.
2.10.83

Key

▼ denotes ground-water first encountered
U4( ) „ 4 in. dia. undisturbed sample
U1½( ) „ 1½ in. „ „ „
D „ disturbed sample
B „ bulk sample
W „ water sample
S( ) „ standard penetration test
C( ) „ cone penetration test
(24) „ number of blows
* „ sample not recovered

Remarks

Scale: 1 in. = 8 Ft.

FIG. 7

Form No. 190 (Revised 9/65)

Marples Ridgway Limited

Site Investigation Division

British Geological Survey