ecourban
ARBORICULTURAL

Arboricultural Implications Assessment and Method Statement for Emsworth Surgery, North Street House, 6, North Street, Emsworth

Arboricultural Implications Assessment and Method Statement

Emsworth Surgery, North Street House, 6, North Street, Emsworth

Produced by:

Barrie Draper BSc (Hons) Arb TechCert(ArborA) CertArb(RFS)

Arboricultural Consultant

Report Ref: **201293 - AIA 7**

Report Date: **14 January 2022**

No.	Title	Page
1	Introduction	3
2	Site Visit, Description and Work Methodology	5
3	Arboricultural Implications Assessment	7
4	Summary	9
5	Preliminary Arboricultural Method Statement	10
Appendix 1	Tree Protection Plan	12
Appendix 2	Tree schedule and inventory	13
Appendix 3	Illustrative specification for tree protection barriers	16
Appendix 4	BS 5837 (2012) – Assessment categories	17
Appendix 5	Qualifications and experience of Barrie Draper	18

1 INTRODUCTION

1.1 **Instruction:** I am instructed by Cordage 14 Ltd to report on trees that could be affected by a development proposal at North Street House, 6, North Street, Emsworth and prepare an Arboricultural Implications Assessment (AIA) and preliminary Arboricultural Method Statement (AMS) to support a planning application on the site.

1.2 **Document disclosure:** Initially, I was provided with a topographical survey (drawing reference '8JJ7-Emsworth Surgery [PS]'). This showed the positions of the significant trees on or near the site, together with the existing buildings and other important features. Subsequently, I was supplied with a copy of a revised proposed layout, (drawing reference '10.00 F Proposed Site Plan) showing a new site configuration.

1.3 **Scope of report:** All my tree observations are of a preliminary nature, with the tree survey carried out from ground level without any investigations using invasive or diagnostic equipment. I was not able to fully view all the trees detailed in this report from all directions, as some were located on an adjacent private property. I have therefore confined observations of them to what was visible from within the site. I have not checked the accuracy of the positions of the trees shown on the provided plans and I have estimated all dimensions unless otherwise indicated.

1.4 **The Tree Protection Plan**: This is included in Appendix 1 and is a composite drawing derived from the information provided. It shows the existing landscape features (from the land survey) in grey superimposed over the proposed layout shown in colour. This allows the relationship between the two to be clearly seen and an appropriate analysis of the implications of the proposed site changes to be undertaken. The Tree Protection Plan has also been annotated to show protection measures for the trees that could realistically be affected by the proposed development. It shows any activities in Root Protection Areas (RPAs) and if trees are to be removed, they are shown with a red dashed crown outline.

1.5 **Qualifications and experience:** This report is based on my site observations and I have come to my conclusions in the context of my experience as a former local government tree officer and a private practice arboricultural consultant. I have qualifications in both arboriculture and forestry and details of these, together with a career summary are provided in Appendix 5.

1.6 **Statutory tree protection:** At the time of writing, I have made no checks to ascertain whether any of the trees discussed are covered by tree preservation orders, or if the site is located in a conservation area. Therefore, any person intending to carry out any operations involving trees (before a formal planning consent is issued) should consult the council before any such works are undertaken.

1.7 **Relevant background information:** This report is an updated version of an earlier document (**eco**urban reference '201293-AIA 4') which has been revised following changes to the proposed site layout.

2 SITE VISIT, DESCRIPTIONS, OBSERVATIONS AND SURVEY METHODOLOGY

2.1 **Site visit and description:** I visited the site on 31 August 2020 to gather my tree data. The Emsworth Surgery consists of the main surgery building, with car parking to the west and a grassed area to the north. A small number of trees are located either to the west of the access into the car park and also to the south of its position and also on the grassed area.

2.2 **Description of proposed development:** This development proposal is for 'Works to convert the doctor's surgery (E) to offices (E) plus the erection of a two-storey building comprising a commercial unit (E) following the demolition of the existing single storey extension. With associated parking and hard and soft landscaping, including provision of one additional parking space.

2.3 **Soil assessment:** British Standard (BS) 5837: 2012 Trees in relation to design, demolition and construction – Recommendations advocates that a soil assessment should be carried out to inform decisions relating to Root Protection Areas (RPAs), tree protection, new planting and foundation design. I have consulted the British Geological Survey (BGS) website and their Geology of Britain viewer and this advises that the bedrock geology for the site is London Clay Formation - Clay, Silt and Sand. I did not undertake any excavations on site to confirm this and a full geotechnical site investigation may need to be undertaken to provide a more in-depth level of information regarding soil type for the site.

2.4 **Tree survey methodology:** My inspection of the trees was visual and did not involve any climbing or exploratory investigations. During my visit, I identified individual trees and I assigned an identification number to each, as shown on the plan in Appendix 1. I then collected the tree data included in Appendix 2 and placed the vegetation in one of four categories (U, A, B or C), as set out in British Standard (BS) 5837: 2012. I have included the BS categorisations in Appendix 4 for easy reference. Where of relevance, I also estimated the crown spreads for each tree at the appropriate cardinal compass points and this information is also shown in the tree schedule in Appendix 2. Although this document is not a full and detailed report on tree health and safety, any significant visible structural defects or physiological conditions identified, together with preliminary tree works, are also noted in the appropriate columns in the tree schedule. However, this report is not a tree condition survey and a full post development tree inspection is recommended to establish that the trees retained pose acceptable levels of risk once the development has been completed.

2.5 **Data interpretation:** The Root Protection Area (RPA) calculations are included in Appendix 2. As set out in paragraphs 4.6.2 and 4.6.3 of the BS, the RPAs may have been adjusted as a matter of arboricultural judgement to indicate the estimated likely position of important tree roots. These modified (or unmodified) RPAs dictate the location of the tree protection barriers (which encompass the Construction Exclusion Zones - CEZs) and also determine the position of any ground protection measures. Tree protection details are shown on the plan included in Appendix 1. Where there is a need for incursions into RPAs, an assessment of the implications of these activities is set out in Section 3 (Arboricultural Implications Assessment) of this report. Where appropriate, details of suitable work methodologies to mitigate any impact are set out in Section 5 (Arboricultural Method Statement).

2.6 **Revisions to the provided land survey:** During my site visit, I noted that some small trees (T2 and T3) were not shown on the provided topographical survey. For completeness, I have therefore illustrated their approximate positions on the plan in Appendix 1.

3 ARBORICULTURAL IMPLICATIONS ASSESSMENT

3.1 **Introduction to the implications of the development proposal on trees:** BS 5837: 2012 sets out in some detail how trees on development sites should be managed. It is usually accepted amongst arboriculturists that Category A (high quality) and Category B (moderate quality) trees are potential constraints on any development proposal, whereas vegetation belonging to Category C (low quality) is considered to be generally less important. Category U trees/hedges are in such poor condition that they are considered unsuitable for retention. This is because they cannot realistically be retained as living entities in respect of the current land use for longer than 10 years. Therefore, these can be effectively discounted in the context of a planning application. On this site a total of FIVE individual trees were recorded during the tree survey and were assigned to the BS 5837 (2012) categories, as set out in Table 1 below:

Category A and B trees	Category C trees	Category U trees
No trees, groups or hedges were rated Category A or B	A total of FOUR trees, (T1, T3, T4 and T5) were rated Category C	A total of ONE tree (T2) was rated Category U

Table 1: Tree numbers and BS categories

No Category A or B trees were recorded during my survey and I have therefore focussed on the implications of the development proposal on the Category C trees on or near the site. Of the total of five trees surveyed, none are scheduled to be removed to facilitate this development proposal and no trees will have activities arising from the development occurring within their RPAs. However, one tree is indicated for removal for management reasons. I have summarised these aspects out in more detail in the following paragraphs.

3.2 **Direct implications of the development proposal - Tree retention and tree loss**

3.2.1 **BS Category C trees to be retained (trees of low quality):** As discussed, trees belonging to Category C are not normally retained where they would impose a significant constraint on the development or redevelopment of a site. However, for this project all the trees surveyed will be retained and where appropriate protected in accordance with the guidance set out in BS 5837 (2012). Consequently, no trees will need to be removed to facilitate this development proposal.

3.3 **Additional implications arising from the development proposal**

3.3.1 **Retained BS Category C trees (trees of low quality) and activities arising from the development proposal:** None of the retained Category C trees are likely to be adversely affected by this development proposal.

3.4 **Additional site tree issues**

3.4.1 **BS Category U trees normally removed for management reasons:** Category U trees are in such poor condition that they are considered unsuitable for retention. This is because they cannot realistically be retained as living trees in the context of the current land use for longer than 10 years. Therefore, these can be effectively discounted in the context of the planning process. On this site, I have assessed tree T2 as falling into Category U and consequently it is scheduled for removal for management reasons. As it is unsuitable for retention in the context of the current site use, I do not believe that its loss should be a consideration in respect of the current planning application.

3.4.2 **Tree protection during development:** A preliminary Arboricultural Method Statement is included in Section 5 and it details the various issues associated with successful tree protection in a development context on this site. If deemed appropriate by the council, this can be specifically referred to in a suitably worded planning condition attached to any subsequently issued planning consent.

4 SUMMARY OF THE IMPLICATIONS OF THE DEVELOPMENT ON TREES

4.1 **Summary:** Of the total of FIVE trees surveyed, none are scheduled to be removed to facilitate this development proposal and no trees will have activities arising from the development occurring within their RPAs. However, ONE tree is indicated for removal for management reasons. Provided the tree protection measures set out in this report are realised, then the proposal is acceptable from an arboricultural perspective and the risk of any implications for retained trees are likely to be low.

5 PRELIMINARY ARBORICULTURAL METHOD STATEMENT

5.1 Tree protection issues

5.1.1 **Tree Protection Plan (TPP):** The plan in Appendix 1 is illustrative, but is based on the layout drawings and topographical survey provided. Therefore, all scaled measurements should be checked against the original design documents. The attached plan and all other information in this report should only be used for dealing with the tree protection issues and all other uses are prohibited, unless authorised by **eco**urban ltd. All the existing trees will have been numbered, with any higher categories (A and B) highlighted in green and blue rectangles and any low categories (C and U) highlighted in grey and red respectively. The plan also shows the locations of the proposed protective measures. Additionally, any trees to be removed are indicated with a red dashed crown outline. The TPP is an important document and a copy of it should be kept on site for reference whilst the development is under construction.

5.1.2 **Protective barriers:** The approximate location of the barriers is illustrated on the plan in Appendix 1 and information on barrier design based on BS 5837 (2012) guidance is included in Appendix 3. The protective barriers will be erected before any materials or machinery are brought onto the site, and before any clearance or construction activities occur. Once the protective barriers have been positioned, these will stay in situ for the duration of the construction, unless previously agreed with the arboricultural consultant or council's tree officer. There will be no access into the protected area and the storage of excavated debris and building materials will be prohibited in RPAs, unless authorised by the arboricultural consultant, after discussion with the council's tree officer. No fires or fuel storage will be allowed within or near to protected areas under any circumstances.

5.2 Additional tree-related issues

5.2.1 **Installation of new services or upgrading of existing provision:** Where practicable, all new services will be outside the protected areas indicated on the plan in Appendix 1, but where existing services within RPAs require upgrading or new provision is needed, great care will be taken to minimise any disturbance. Trenchless installation will be the preferred option, but if this is not feasible, any excavation will be carried out by hand in accordance with the guidelines set out in NJUG Volume 4 - Guidelines for the Planning, Installation and Maintenance of Utility Apparatus in Proximity to Trees.

5.2.2 **Material storage areas and site compounds:** All construction material storage areas, cement silos or cement mixing areas, fuel storage points and compounds for machinery etc. will be outside protected areas, unless otherwise agreed with the council.

5.2.3 **Contractors car parking, site offices and welfare facilities:** Whilst it is possible to have site offices and welfare facilities within RPAs, care is needed in their positioning and also in the connection of water, electricity and drainage to service them. Therefore, these will generally be sited outside the tree RPAs, unless agreed previously with the council. Contractor's car parking facilities will also be located away from retained trees.

5.2.4 **Tree works:** Any tree pruning or tree removal operations are set out in the tree schedule included in Appendix 2. Additionally, those trees scheduled for removal are also shown on the Tree Protection Plan included in Appendix 1.

5.2.5 **Planning, communication and preliminary timing of events:** It is not unusual for the details of timing of operations that could impact on important trees to only be finalised once planning consent has been given. Site managers, clearance and construction teams, and other important personnel are normally only appointed at this stage and it is these people who will be crucial in delivering the tree protection detailed in this report. My experience is that the pre commencement site meeting is critical in terms of avoiding damage to trees, but in the intervening time, I propose the following preliminary cascading timetable of events to help minimise any risk of impact on trees. However, the following schedule may be modified at the pre-commencement meeting, subject to discussion with all parties and agreement with the council:

1. Pre-commencement site meeting
2. Tree works undertaken
3. Protective barriers erected before any clearance or construction activities occur on site
4. Tree protection only removed at the end of the construction phase when there is no longer any risk to trees

Barrie Draper BSc (Hons) Arb TechCert(ArborA) CertArb(RFS)
Arboricultural Consultant Date: **14 January 2022**

Appendix 1: Tree Protection Plan

1 A3 plan

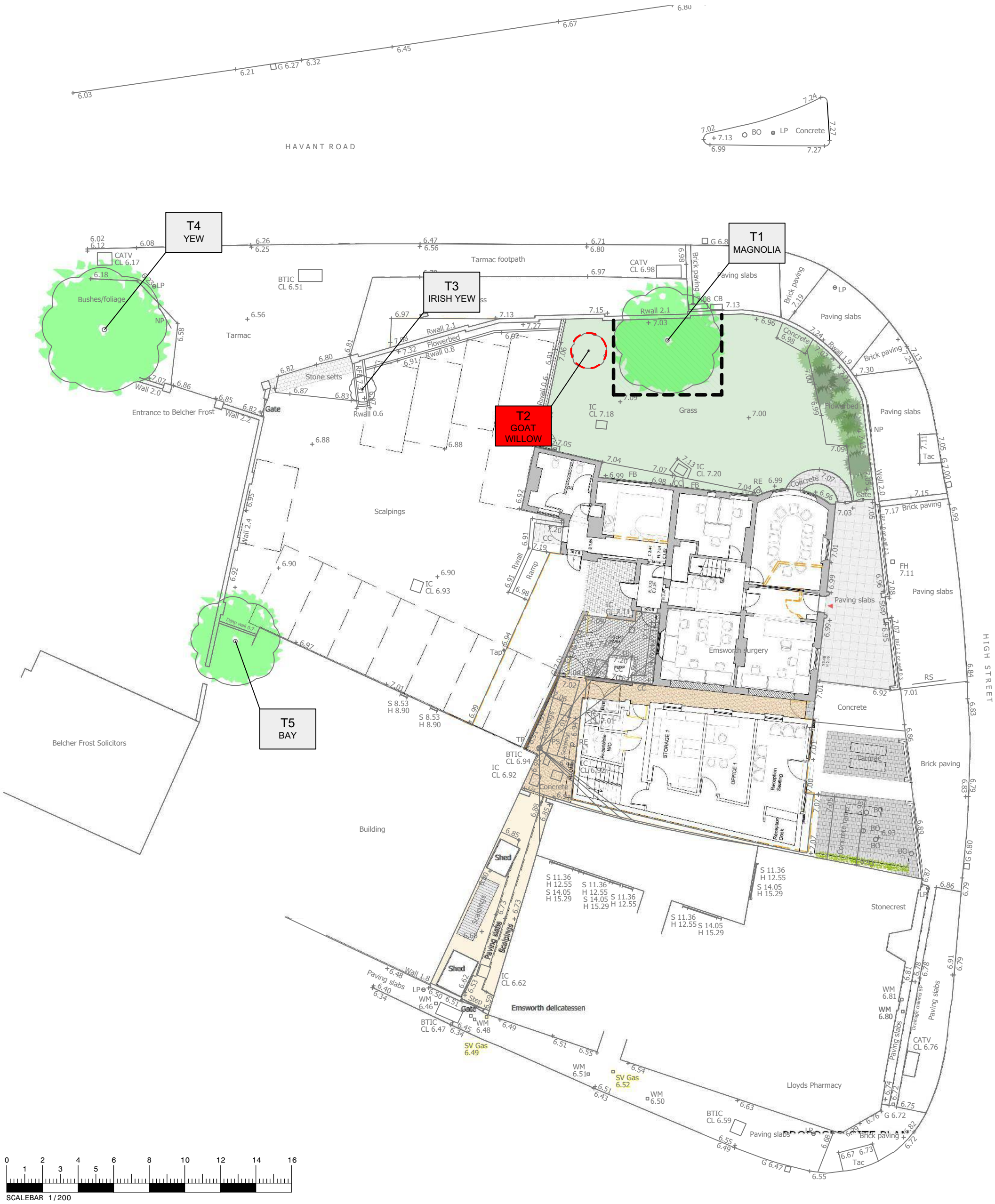

ecourban ARBORICULTURAL	ECO 6 - TREE PROTECTION AT EMSWORTH SURGERY, NORTH STREET, EMSWORTH	SCALE: 1:200 @ A3	COMPOSITE PLAN: LAND SURVEY IN GREY, PROPOSED LAYOUT IN COLOUR

T1 Tree sp — **BS Category C:** Trees of low quality and value

T1 Tree sp — **BS Category U:** Trees normally removed for arboricultural management reasons

Tree protective barriers with construction exclusion zone

Tree to be removed

This drawing was originally produced in colour, therefore any subsequent monochrome photocopies may not show appropriate levels of detail and should not be relied upon for the purposes of dealing with site tree issues

Appendix 2: Tree Schedule and Inventory

Background fill colour represents BS 5837 (2012) categories: A Category trees have green backgrounds, B Category trees have light blue backgrounds, C Category trees have grey backgrounds and U Category trees have red backgrounds.

Tree No.	Species	Ht (m)	Single stem dia. at 1.5m (cm)	Est. Dia. *	STEM DIAMETERS (MULTIPLE)								Branch spread (m)				Height above ground (m)	Age class	Notes	Management proposals	BS cat	RPA area (m²)	RPA radius (m)
					Multi stemmed trees with 1 - 5 stems (cm)					Multi stemmed trees with 1 - 5 stems combined (cm)	Multi stemmed trees >5 stems												
					1	2	3	4	5		Mean stem dia. (cm)	No. of stems	N	E	S	W							
T1	Magnolia	6	-	-	13	13	15	-	-	24	-	-	3	2	3	2	2	M	Small tree/shrub. Multi stemmed,		C1	25	2.8
T2	Weeping goat willow	2	18	-	-	-	-	-	-	-	-	-	1	1	1	1	1	MA	Small tree. Decay lower main stem.	Fell	U	-	-
T3	Irish yew	3	-	*	-	-	-	-	-	-	5	9	0.5	0.5	0.5	0.5	1	Y	Small tree. Located in raised brick planter .		C1	10	1.8
T4	Yew	4	15	*	-	-	-	-	-	-	-	-	4	3	1	3	2	Y	Small offsite tree. Unbalanced.		C1	10	1.8
T5	Bay	2		*	-	-	-	-	-	-	10	6	0.5	0.5	0.5	0.5	1	MA	Small tree/shrub. Severely pruned.		C1	27	2.9

Abbreviations:

Abbreviations	Meaning	Abbreviations	Meaning	Abbreviations	Meaning
T	*Individual tree*	**M**	*Mature*	**RPA**	*Root Protection Area*
G	*Groups of trees*	**MA**	*Maturing*	<	*Less than*
H	*Hedge*	**Y**	*Young*	>	*More than*

Appendix 2: Tree Schedule and Inventory

Tree Schedule Notes:

Tree number	*Assigned during the site visit and also referenced on the plan in Appendix 1.*
Species	*Common name and referenced to scientific name in the above list. Where I have some doubt over the actual tree species, the genus will have been noted followed by sp. Where trees are numerous and present in groups, not every individual species may have been noted.*
Height	*Measurement of total tree height using a laser hypsometer to nearest metre or where clear line of site is not possible then an estimate based on interpolation of heights of nearby measured trees.*
Stem diameters	*Measurement of stem diameter either at 1.5m above ground (or in accordance with BS guidance where trees have multiple stems) with a forester's girth measuring tape.* ***Diameters followed by asterisk symbol indicate estimated diameters because of access difficulties, presence of ivy or other obstructions.*** *Where trees are present in a group, the tree with the largest stem diameter within the group will have been measured/estimated.*
Est. Dia.	*Estimated diameters due to access restrictions are indicated with an asterisk*
Branch spread	*Where appropriate and where ground conditions allow, an estimate of the crown spread at each of the cardinal compass points. Where only part of the site is affected by trees, measurement may be in one or two directions only*
Existing height above ground level	*Distance in metres to first significant branch or canopy or a height above which crown lifting operations would not be appropriate*
Age class	*Simplistic estimate of tree age in one of FOUR categories (young, maturing, mature or over mature).*
Notes	*Although this document is not intended to be a full and detailed report on tree health and safety, any significant structural defects or physiological conditions have been identified where these were visible. Where no entries are recorded, this indicates no observable issues were identified. Where there is restricted access to the base of a tree, its attributes are assessed from the nearest point of access. Climbing inspections are not carried out during a walkover tree survey and, if heavy ivy is present, tree condition is assessed from what can be seen from the ground.*

Appendix 2: Tree Schedule and Inventory

Management proposals	*The inspection of all trees was of a preliminary nature and only defects visible from the ground have been identified. Each individual tree may not have been inspected closely because of access difficulties and only defects visible from the inspection point have been identified. Monitoring may be indicated where tree risk can be adequately managed by increased frequency of site inspections. Further investigation may be indicated where additional data may be required beyond a purely visual assessment. However, a full post development tree inspection is recommended to establish that the trees retained during construction pose acceptable levels of risk once the development has been completed.*
BS 5837 (2012) Category	*Either U, A, B or C based on the BS 5837 (2012) guidance.*
RPA and RPA radius	*RPA and RPA radius calculations have been undertaken in accordance with the guidance set out in BS 5837 (2012).*

Tree Inventory:

Common Tree Names	Scientific Tree Names		Common Tree Names	Scientific Tree Names
Bay	*Laurus nobilis*		Weeping goat willow	*Salix caprea* 'Pendula'
Irish yew	Taxus baccata ' Fastigiata'		Yew	*Taxus baccata*
Magnolia	*Magnolia* sp			

Appendix 3: Illustrative Specification for Tree Protection Barriers

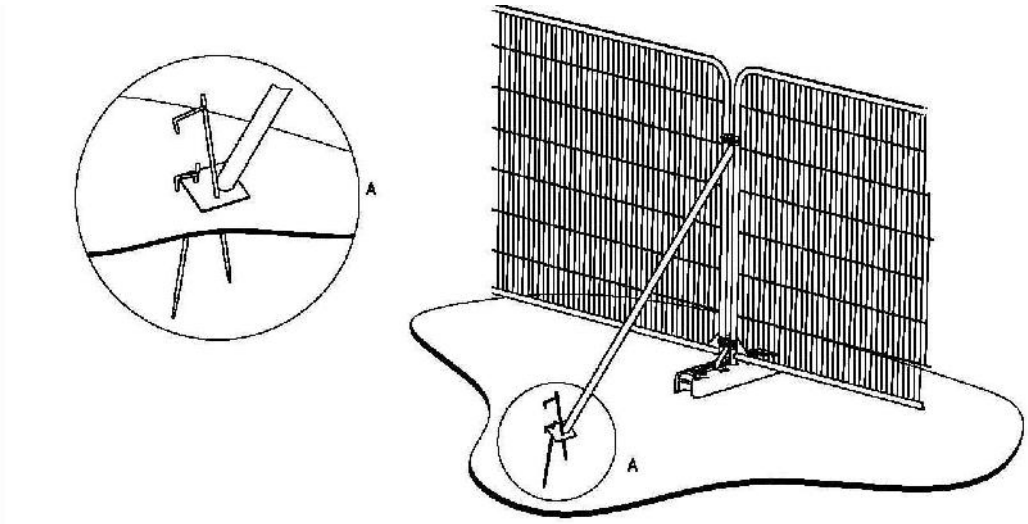

a) Stabilizer strut with base plate secured with ground pins

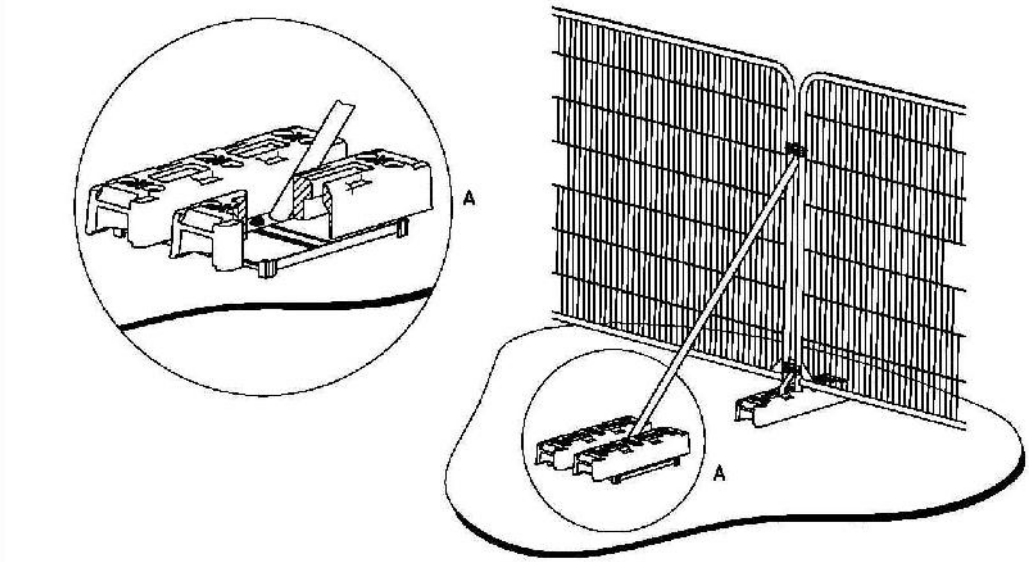

b) Stabilizer strut mounted on block tray

Illustration taken from British Standard 5837 (2012):
Trees in relation to design, demolition and construction – Recommendations.

2 m tall welded mesh panels on rubber or concrete feet might provide an adequate level of protection from cars, vans, pedestrians and manually operated plant. In such cases, the fence panels should be joined together using a minimum of two anti-tamper couplers, installed so that they can only be removed from inside the fence. The distance between the fence couplers should be at least 1 m and should be uniform throughout the fence. The panels should be supported on the inner side by stabilizer struts, which should normally be attached to a base plate secured with ground pins
– BS 5837 (2012)

Ref: Tree Protection Barriers (Type 2)	**Drawing No. TPB2**
Scale: N/A	

Appendix 4: BS 5837 (2012) – Assessment Categories

TREES FOR REMOVAL		
Category and definition	**Criteria**	**Identification on plan**
Category U Those in such a condition that they cannot realistically be retained as living trees in the context of the current land use for longer than 10 years	• Trees that have a serious, irremediable, structural defect, such that their early loss is expected due to collapse, including those that will become unviable after removal of other category U trees (e.g. where, for whatever reason, the loss of companion shelter cannot be mitigated by pruning) • Trees that are dead or are showing signs of significant, immediate, and irreversible overall decline • Trees infected with pathogens of significance to the health and/or safety of other trees nearby, or very low quality trees suppressing adjacent trees of better quality *NOTE Category U trees can have existing or potential conservation value which it might be desirable to preserve.*	RED

TREES TO BE CONSIDERED FOR RETENTION				
Category and definition	**Criteria — Subcategories**			**Identification on plan**
	1 Mainly arboricultural qualities	**2 Mainly landscape qualities**	**3 Mainly cultural values, including conservation**	
Category A Trees of high quality with an estimated remaining life expectancy of at least 40 years	Trees that are particularly good examples of their species, especially if rare or unusual; or those that are essential components of groups or formal or semi-formal arboricultural features (e.g. the dominant and/or principal trees within an avenue)	Trees, groups or woodlands of particular visual importance as arboricultural and/or landscape features	Trees, groups or woodlands of significant conservation, historical, commemorative or other value (e.g. veteran trees or wood-pasture)	GREEN
Category B Trees of moderate quality with an estimated remaining life expectancy of at least 20 years	Trees that might be included in category A, but are downgraded because of impaired condition (e.g. presence of significant though remediable defects, including unsympathetic past management and storm damage), such that they are unlikely to be suitable for retention for beyond 40 years; or trees lacking the special quality necessary to merit the category A designation)	Trees present in numbers, usually growing as groups or woodlands, such that they attract a higher collective rating than they might as individuals; or trees occurring as collectives but situated so as to make little visual contribution to the wider locality	Trees with material conservation or other cultural value	BLUE
Category C Trees of low quality with an estimated remaining life expectancy of at least 10 years, or young trees with a stem diameter below 150 m	Unremarkable trees of very limited merit or such impaired condition that they do not qualify in higher categories	Trees present in groups or woodlands, but without this conferring on them significantly greater collective landscape value; and/or trees offering low or only temporary/transient landscape benefits	Trees with no material conservation or other cultural value	GREY

Appendix 5: Qualifications and Experience of Barrie Draper

1 **Qualifications:** I have a BSc degree (with Honours) in Arboriculture from the University of Central Lancashire. I also hold a BTEC Higher National Diploma (HND) in Forestry (Lowland Management), the Arboricultural Association's Technician's Certificate in Arboriculture (Tech Cert), the Royal Forestry Society's Certificate in Arboriculture (Cert Arb) and the National Examinations Board Certificate in Forestry.

2 **Career experience:** I began my arboricultural career in 1993 as an arborist with Portsmouth City Council. During my time with the council I worked for both the direct labour organisation and for a private contractor where I obtained valuable hands on experience in all aspects of arboriculture. From 1999 to 2002 I was employed as Senior Arborist by Parchment Housing Group, a housing association based near Portsmouth. I managed the Groups' tree stock on their behalf, carrying out tree inspections and practical management operations. I have also worked in local government, spending time with Thurrock Borough Council in Essex where I was the Tree and Landscape Officer, and with Winchester City Council, where I was Arboricultural Officer for a period of 2 years. During my time working in local government I was responsible for making Tree Preservation Orders, administering applications to work on protected trees and advising on planning applications when trees were considered material constraints on development. Working within a planning environment allowed me to gain valuable experience in the management of trees in development situations and an understanding of the planning process and how it relates to trees. From January 2005 I worked for Barrell Tree Consultancy Ltd advising clients on a wide range of tree related issues. I left the company in September 2008 and set up ecourban ltd.

ecourban
ARBORICULTURAL

ecourban ltd, 13 The Greencroft, Salisbury SP1 1JD

T: 01962 877 397 M: 07532 373 563 E: barrie@eco-urban.co.uk

W: www.eco-urban.co.uk