**General Notes**

1. **This drawing is © copyright BLUNN Architects 2021. No unauthorised reproduction of any kind is permitted.**
2. No Dimensions to be scaled from this drawing
3. This map is reproduced from Ordnance Survey material with the permission of Ordnance Survey on behalf of the controller of Her Majesty's Stationery Office © Crown copyright. Unauthorised reproduction infringes Crown Copyright and may lead to prosecution or civil proceedings. (100019180), (2021)

**Notes:**

Key

| | |
|---|---|
| 1a | existing clay tiles |
| 1b | proposed grey tiles |
| 2 | red/brown brick |
| 3 | PVC windows & doors |
| 4 | white painted bargeboard |
| 5 | light grey render |
| 6 | vertical timber cladding |
| 7 | black painted timber battens |
| 8 | dark grey PPC aluminium |
| 9 | grey brick |
| 10 | dark grey aluminium windows & doors |
| 11 | timber finish door |
| 12 | flat roof |
| 13 | proposed clay roof tiles |
| 14 | proposed roof light |
| 15 | proposed pergola |

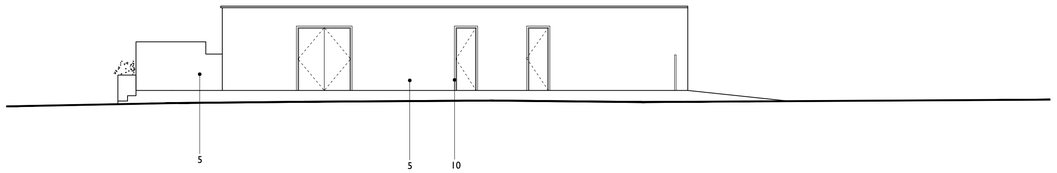


01 Proposed Garage Side (West) Elevation 1:100

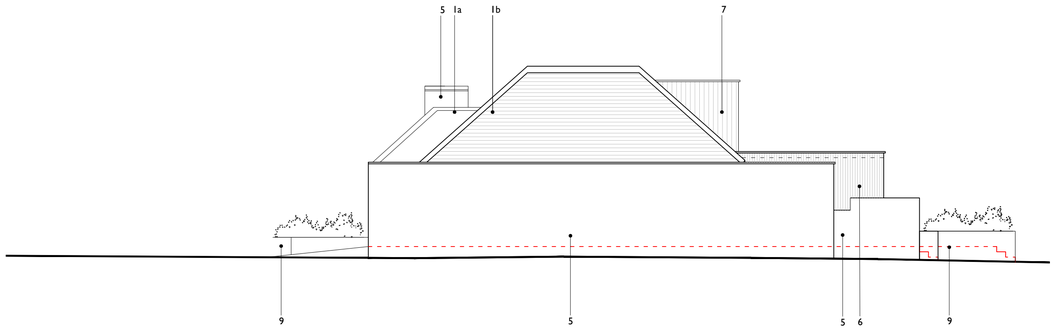


02 Proposed Garage Side (East) Elevation 1:100

FOR PLANNING

| Rev | Date | Description | Drawn | Chkd |
|---|---|---|---|---|
| - | - | - | | |

**BLUNN.** ARCHITECTS

Foxcroft Studio
Oliver's Battery
Winchester
SO22 4JT

mail@blunnarchitects.com
tel:01962 275935
07977 148516

Kanga Warren
Pycroft Close, Hayling Island

Proposed Garage Elevations

Scale 1:100 @ A1 / 1:200 @ A3

P1050-A-ELE-312

0 1 5 10m