HZS ZENITH

SCROLL PACKAGED UNITS

HUBBARD

A Zanotti Group Company

HZS HUBBARD ZENITH SCROLL RANGE

f-gas friendly

Qualified for **Energy Technology List**

www.eca.gov.uk

TM

Authorised User No. 00460

HUBBARD

A Zanotti Group Company

HZS Hubbard ZENITH Scroll Range

Qualified for Energy Technology List
www.eca.gov.uk
TM

Authorised User No. 00460

f-gas friendly

Patented* 'PEEC™' control mode delivers average energy savings of up to

23%

* Patent pending No.GB0918635.4

Performance friendly

- ECA accredited medium temperature condensing units for qualified performance
- PEEC™ Control system provides improved efficiency and condensing control over standard fan speed regulated systems. Hubbard Patent applied for.
- Electronic control board pre-configured for operation providing reduced set up time and inbuilt safety features to improve major component life-cycles. Complete with variable fan speed output. Two modes of operation available PEEC™ and Standard FSC with ambient setback.
- 2 case sizes cover the Scroll range, B and C with 11 medium temperature options covering 4 kW to 13.6 kW (-10°C / 32°C) and 5 low temperature options covering 2.2 kW to 4.6 kW (- 30°C /32°C)
- Single phase available on medium temperature options to 6kW
- All Zenith HZS units utilise Copeland Scroll compressors for reliability, and come complete with sight-glasses for correct field application
- B and C case Zenith units utilise high surface area low coil row density designs to allow the use of specially profiled 6 and 8 pole German manufactured fans for ultra quiet operation. All compressor compartments are sound attenuated with careful consideration given to the prevention of noise breakout.
- Condensers are supplied as standard with Thermoguard coil protection for increased longevity in harsh environments, such as inner city areas, petrol forecourts and coastal regions
- All units high ambient operable as standard

Environment friendly

- Case work utilises an organically coated steel to reduce the use of non recyclable materials and improve the long term durability. Utilising steel fan guards and case-work reduces potential malicious damage and safe-guards against third party incidents.
- Unit materials are over 90% recyclable
- Equipment is UK manufactured to reduce lead-times and is PED certified and CE certificated

F-gas friendly

- No spindle valves, ball valves used throughout
- Circuit design reduces refrigerant loss potential
- PEPI™ Portable Electronic Pressure Indicator removes requirement to break into system to check pressures, useful for F-gas monitoring obligations

Options

- Wall mounting brackets
- Anti-Vandal Security Cages
- Oil separators for extended pipe runs
- PEPI™ Portable Electronic Pressure Indicator

UK Manufactured

2 YEAR PARTS WARRANTY

With planned maintenance contract. Conditions apply.

Medium temperature Scroll units ECA compliant

Condensing Unit Models	ECA COP Values	Ambient Temp°C	Refrigeration capacity in watts at evaporating temperature 10°C	5°C	0°C	-5°C	-10°C	-15°C	-20°C
		27	8980	7610	6410	5370	4440	3640	2950
HZB19-1B2	2.9	32	8300	7030	5900	4920	4070	3320	2690
		38			5250	4370	3590	2920	2360
		27	9580	8050	6750	5630	4670	3830	3120
HZB19-3B2	2.9	32	8950	7500	6230	5190	4290	3510	2840
		38			5640	4530	3820	3100	2500
		27	11900	10050	8460	7060	5830	4770	3860
HZB21-1B3	3.1	32	11050	9280	7810	6500	5360	4370	3540
		38		8360	7020	5810	4760	3880	3120
		27	11650	9830	8300	6930	5720	4680	3780
HZB21-3B3	3.2	32	10850	9100	7670	6380	5250	4290	3460
		38		8180	6870	5690	4670	3800	3050
		27	13400	11300	9500	7900	6600	4900	5400
HZB26-1B3	3	32	12400	10500	8700	7300	6000	4900	4000
		38			7800	6500	5300	3900	3500
		27	13450	11350	9480	7940	6560	5380	4370
HZB26-3B3	3.1	32	12600	10550	8740	7300	6010	4920	3990
		38			7870	6540	5360	4360	3510
		27	16050	13500	11350	9440	7790	6250	5160
HZB30-3C2	3.2	32	15000	12550	10500	8700	7140	5830	4700
		38		11400	9440	7770	6340	5140	4110
		27	19950	16900	14200	11800	9730	7970	6450
HZB38-3C3	3.3	32	18650	15700	13100	10850	8940	7300	6090
		38	17050	14250	11800	9740	7970	6460	5190
		27	23200	19600	16500	13800	11350	9310	7550
HZB45-3C3	3.4	32	21700	18200	15250	12650	10450	8520	6900
		38		16500	13750	11100	9300	7560	6080
		27	27600	23300	19600	16400	13400	10800	8400
HZB50-3C3	3.2	32	25800	21700	18100	15000	12300	9700	7400
		38			16300	13400	10700	8300	6100
		27	30300	25600	21500	18000	14800	12000	9500
HZB58-3C3	3.1	32		23800	19900	16500	13600	10900	8500
		38				14800	12000	9500	7200

COP data provided in accordance with EN13771. Conditions: Ambient 20°C, Evaporating -10°C, SGT 20", Liquid Subcooling within the limits of the unit.

Low temperature Scroll units

Condensing Unit Models	Ambient Temp°C	Refrigeration capacity in watts at evaporating temperature -10°C	-15°C	-20°C	-25°C	-30°C	-35°C	-40°C
	27	5360	4440	3630	2950	2370	1870	1450
HZF09-3B2	32	4950	4090	3350	2720	2180	1720	1340
	38	4450	3660	2990	2430	1950	1540	1190
	27	6570	5450	4500	3670	2960	2360	1840
HZF11-3B2	32	6050	5010	4130	3380	2730	2170	1690
	38	5400	4480	3690	3000	2430	1930	1490
	27	7580	6310	5190	4220	3380	2660	2050
HZF13-3B2	32	6960	5770	4750	3860	3090	2440	1890
	38		5100	4190	3410	2740	2180	1710
	27	9410	7760	6410	5200	4170	3290	2560
HZF15-3B3	32	8640	7160	5890	4760	3820	3020	2340
	38	7850	6400	5240	4240	3390	2680	2070
	27	11150	9320	7630	6260	5040	4000	3140
HZF18-3B3	32	10250	8560	7000	5750	4620	3680	2880
	38		7600	6260	5100	4100	3250	2520

Capacity data stated at EN13215 conditions. Superheat 10K and Sub-cooling within the limits of the condensing unit.

Designations

HZ B 19 - 1 B 3

Hubbard Zenith
Compressor Type
HZB-Medium temperature Scroll
HZF-Low temperature Scroll
Compressor Model

1 or 3 phase
Case Sizee A, B or C
Coil rows 2 or 3

HZS Hubbard ZENITH Scroll Range

Medium temperature Scroll units ECA compliant

	Part numbers for ordering units				Size and weight		Compressor Model
	1 ph units		3 ph units				
	Model	Part No	Model	Part No	Size Ref	Weight (dry) kg	
Scroll Medium Temperature Condensing Units.	HZB19-1B2	A8550-51	HZB19-3B2	A8550-52	B	88	ZB19
	HZB21-1B3	A8550-53	HZB21-3B3	A8550-54	B	90	ZB21
	HZB26-1B3	A8550-55	HZB26-3B3	A8550-56	B	92	ZB26
			HZB30-3C2	A8550-57	C	116	ZB30
			HZB38-3C3	A8550-58	C	123	ZB38
			HZB45-3C3	A8550-59	C	130	ZB45
			HZB50-3C3	A8550-60	C	150	ZB50
			HZB58-3C3	A8550-61	C	152	ZB58

Low temperature Scroll units

	Part numbers for ordering units		Size and weight		Compressor Model
	Model	Part No	Size Ref	Weight (dry) kg	
Scroll Low Temperature Condensing Units.	HZF09-3B3	A8550-76	B	91	ZF09
	HZF11-3B2	A8550-77	B	92	ZF11
	HZF13-3B2	A8550-78	B	102	ZF13
	HZF15-3B3	A8550-79	B	103	ZF15
	HZF18-3B3	A8550-80	B	105	ZF18

More detail is available in the installation manual D2334 please request a copy from the Hubbard Technical Team on 01473 892280 or 01473 892291.

Case sizes (mm)

Model	Depth	Width	Height	Feet Centres
A	423	1023	684	905
B	435	1150	787	1030
C	547	1368	989	1250

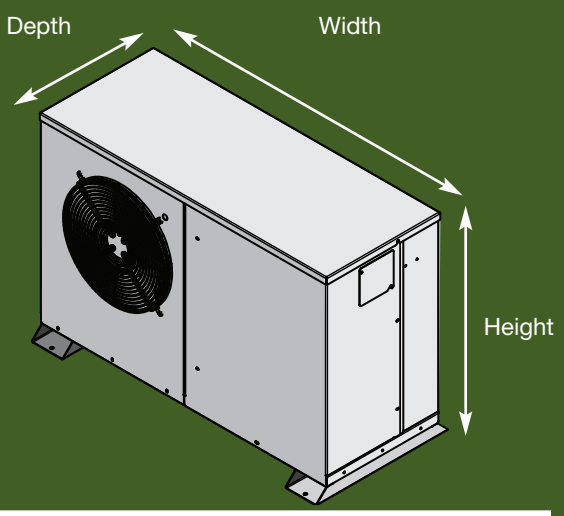

Refrigeration connections		Condenser fan		Receiver Volume Litre	Sound pressure level 10m dB(A)*	Electrical Data			
						1 ph units		3 ph units	
Suction line	Liquid line	Size	Airflow m³/h			Unit FLA	Unit LRA	Unit FLA	Unit LRA
7/8"	1/2"	1 x 450	4445	4	38	13.7	61	7.2	32
7/8"	1/2"	1 x 450	4115	4	38	17.1	82	7.9	40
7/8"	1/2"	1 x 450	4115	4	38	18.7	97	9.8	46
7/8"	5/8"	1 x 630	7375	4	41			11.7	50
1.1/8"	5/8"	1 x 630	6955	6.5	41			14.2	66
1.1/8"	5/8"	1 x 630	6955	6.5	41			14.5	74
1.1/8"	5/8"	1 x 630	6955	6.5	41			16	100
1.1/8"	5/8"	1 x 630	6955	6.5	41			17	95

Refrigeration connections		Condenser fan		Receiver Volume Litre	Sound pressure level 10m dB(A)*	Electrical Data	
						3 ph units	
Suction line	Liquid line	Size	Airflow m³/h			Unit FLA	Unit FLA
7/8"	3/8"	1 x 450	4445	4	38	6.7	40
7/8"	1/2"	1 x 450	4445	4	38	7.7	46
7/8"	1/2"	1 x 450	4445	4	38	8.7	51.5
7/8"	1/2"	1 x 450	4115	4	38	10.7	64
1.1/8"	1/2"	1 x 450	4115	4	38	12.7	74

*Sound measurements in accordance with ISO3744 with figures published at 10m free field with fan at full speed

PEEC™ Performance Enhancing Electronic Control SYSTEM

HUBBARD
A Zanotti Group Company

The Zenith Range Control Units

All Hubbard 'HZ' ranges incorporate a unique electronic board designed specifically for operation of a refrigeration unit, the Controller uses transducers as well as a temperature probe to provide the most up to date control system currently available. Simple to install with pre-set parameters and functions never seen before on a condensing unit, the HZ board is unique to Hubbard*.

The Control board can operate in two modes:
(Standard supply mode A)

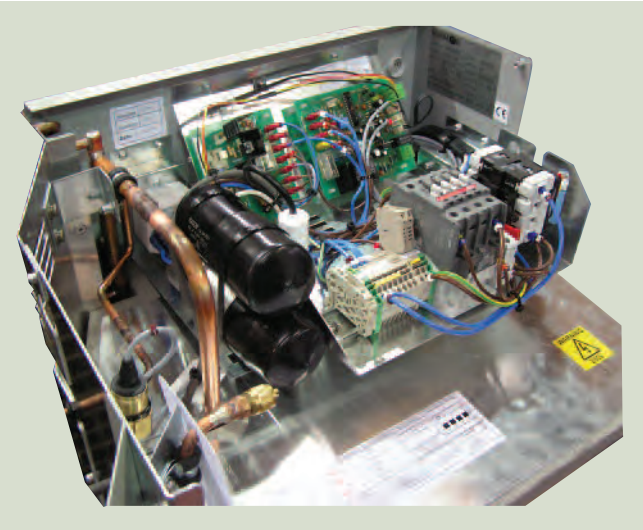

Mode A

Standard Fan Speed control with low ambient setback provides a reduced level of fan noise at low load / ambient conditions. Combined with the option of the maximum speed being reduced via an input from an ambient sensing temperature probe this system provides the best solution for noise sensitive sites.

Mode B

PEEC™ Performance Enhanced Electronic Control* operation provides the system with a sophisticated fan speed control which allows the unit to operate when achievable at the optimum condensing temperature in relation to its evaporating temperature without jeopardizing liquid quality to the expansion valve.

- Pre-configured parameters for pump-down operation, reduce set up time on site

- In built compressor protection to maximise component life expectancy, including anti-cycle and phase rotation sensing

- The control board has the facility to connect to external BMS / monitoring systems via a set of volt free NO/NC contacts to register a fault status such as HP failure or phase rotation

PEPI™ Portable Electronic Pressure Indicator

HUBBARD
A Zanotti Group Company

The PEPI™ allows easy system diagnostics without breaking into the refrigeration circuit with traditional guages and is a useful tool to help engineers complete customers F-Gas regulation obligations without adding the potential for loss of refrigerant.

* Patent pending No.GB0918635.4

What is an ECA?

Enhanced Capital Allowances offer tax relief for businesses investing in Low Carbon Technologies (energy efficient products).

Who administers them?

The Carbon Trust is an independent company funded by the government. Their role is to help the UK move to a low carbon economy by helping businesses and the public sector reduce carbon emissions now and capture the opportunities of low carbon technologies.

Hubbard Products is the World's first manufacturer of Packaged Condensing Units to be successful in gaining certification and to be admitted to the Energy Technology List by the Carbon Trust.

What is the Energy Technology List (ETL)?

The ETL is a list of products qualifying for an ECA as produced by the Carbon Trust in conjunction with the Department of Environment, Food and Rural Affairs (DEFRA) and the Inland Revenue.

What is a Capital Allowance?

When companies purchase a Packaged Condensing Unit in normal circumstances they can deduct a portion of its cost from their tax bill over the following 10 years.

What is a Enhanced Capital Allowance?

As an incentive to invest in energy efficient products an ECA allows businesses to deduct 100% of the cost of qualifying Packaged Condensing Units from their tax bill in one year.

On the 4th January 2010 the Hubbard Zenith HZS Packaged Condensing Unit range was the UK's first system to qualify as an ECA.

Who Qualifies?

Enhanced Capital Allowances are only available to the end user providing they pay company tax.

Excluded are Government establishments, the NHS, MOD, Schools etc.

How do I claim an ECA?

Complete your tax return as shown below

Expenditure

118	**Expenditure on machinery and plant on which first year allowance is claimed**	118 £
119	*Put an 'X' in box 119 if claim includes enhanced capital allowances for designated energy-saving investments*	119 X
120	**Qualifying expenditure on machinery and plant on long-life assets**	120 £
121	**Qualifying expenditure on machinery and plant on other assets**	121 £

Where do I find out more?

For full details of all Hubbard Products Ltd. (Hubbard Commercial) Enhanced Capital Allowances visit www.eca.gov.uk

For advice and assistance concerning the ECA qualifying HZS Hubbard Zenith Scroll range telephone 01473 892289 or email commercial@hubbard.co.uk

For businesses with questions about the ECA scheme or the ETL please visit www.eca.gov.uk/energy, or contact the Carbon Trust Customer Centre on 0800 085 2005 or email: customercentre@carbontrust.co.uk

For tax enquiries relating to the ECA scheme, please contact Nick Williams at HM Revenue & Customs on 020 7147 2541, or email nicholas.williams@hmrc.gsi.gov.uk or visit: www.hmrc.gov.uk/manuals/camanual/CA23100_htm

www.hubbard.co.uk

The World's first ECA qualified Packaged Condensing Unit manufacturer

Qualified for Energy Technology List www.eca.gov.uk ™

Authorised User No. 00460

HZS ZENITH

SCROLL PACKAGED UNITS

HUBBARD

A Zanotti Group Company

HZS Zenith Scroll Packaged Units
Standard equipment

- Copeland Scroll Compressor
- Weatherproof Housing
- Filter Drier
- Sight Glass
- Receiver
- Charging Valve
- Mains Isolator
- Sound Attenuation
- Low Noise 6 or 8 Pole FAN Motors
- Thermoguard Condenser Coil Protection
- Electronic Control Board consisting of:

  Fan Speed Control

  Pre Configured Settings

  Anti Short Cycle Protection

  BMS NO/NC Connections

  Delayed Start

  On Board Diagnostics

For further information

Contact your refrigeration contractor for further details on the extensive range of Hubbard equipment or telephone the Hubbard Helpline

Sales Helpline ***0044(0)1473 892289***
Technical Helpline ***0044(0)1473 892280 or 0044(0)1473 892291***

THE LEADERS IN COMMERCIAL COOLING

Members of BFBi CE

Hubbard Products Limited
Hillview, Otley, Ipswich, Suffolk IP6 9NP
Telephone: 01473 892289 Fax: 01473 892345
Email: commercial@hubbard.co.uk Web: www.hubbard.co.uk

HUBBARD A Zanotti Group Company

© 2010, Hubbard Products Ltd., Otley, Ipswich.

Publication: HPL/CHZS-Tech-15.01.10
Models and specifications are subject to be changed without notice.