Chancerygate

Solent Road
Havant

Arboricultural Impact Assessment

Issue No.2: 21-07-2021

July 2021

TALA
TERRY ANDERSON LANDSCAPE ARCHITECTS

CONTENTS

1. INTRODUCTION 2
2. TPO GROUP PRESERVATION ORDER 2003 4
3. SURVEY INFORMATION 5
4. RECOMMENDATIONS 9

APPENDICES

APPENDIX 1
Survey Definitions and Schedule

APPENDIX 2
Tree Survey Plan 1

APPENDIX 3
Tree Impact Assessment Plan 2

APPENDIX 4
Tree Protection Plan 3

APPENDIX 5
Tree Protection Barrier

1 INTRODUCTION

1.1 Survey: Undertaken and Summary

1.1.1 A total of 70Nr. individual trees, which includes trees outside the site boundary but may be impacted by the development, have been surveyed, see Plan 1 in Appendix 2. The survey schedule prepared follows the guidance provided in BS 5837 'Trees in relation to construction' (2012). The majority of trees surveyed are in a sound condition with only 3Nr. trees where there are defective aspects to their structure. All of the trees that are to remain on site will, in the long term, require some form of maintenance work which should be undertaken by an arboricultural contractor who is a member of the Arboricultural Association or similar professional body.

1.1.2 This report and the attached drawings are in support of the planning application submitted by Chancerygate (Erdington) Limited.

1.2 Survey Scope

1.2.1 The survey undertaken was by means of a visual inspection at ground level and therefore, any statements made regarding the potential extent of decay or structural damage either at ground level or within a tree's upper crown, is based on what can be seen and is therefore an indication of the trees structural health. There may, as a result of these visual observations, be a necessity to undertake additional investigative work to determine the extent of any areas of decay or damage identified at this stage. All recommendations expressed within the survey's conclusions are based on the current condition, health and potential safe life expectancy of individual trees which may change over time. As recommended below, regular surveys should be undertaken to monitor the health of the tree stock.

1.2.2 All underground services on site will be laid in the main access road, pavements or service yards, and will therefore be outside the root protection zone of all trees identified in the Tree Protection Plan. The report does not cover the arrangements that may be required in connection with the laying or removal of currently unidentified underground services. Underground services near trees will need to be installed in accordance with guidance given in BS5837 and the National Joint Utilities Group

publication Vol.4 “Guidelines for the planning, installation and maintenance of utility apparatus in proximity to trees” – August 2007.

1.3 Site Description

1.3.2 The planning application site is a predominantly grassed open space surrounded by tree planting. Solent Road is to the south side of the site. The north boundary is bordered by a watercourse and beyond 2 water bodies, one named Brockhampton Springs. To the east and west there are residential properties. It is proposed Bosmere Medical Centre will share the same entrance off Solent Road and is located further along Solent Road to the southeast corner of the site. The only significant trees within the site boundary form part of the vegetation hedgerow adjacent to Solent Road to the south but separated from the highway by a drainage ditch.

2 PLANNING AUTHORITY

2.1 Tree Preservation Order

2.1.1 There are 24 trees within 5 designated groups which are subject to Tree Preservation Order 1801, issued in 2003 by Havant Borough Council

2.1.2 6 trees within Group 5 are proposed to be removed in order to improve the joint access onto both the Development and Bosmere Medical Centre

2.1.3 9 trees within Groups 1 and 2 are situated within the site boundary. One of these trees, a Scots Pine, is proposed to be removed in order to allow for the development.

3 SURVEY INFORMATION

3.1 Tree Survey and Data Schedule

3.1.1 The tree survey was initially undertaken on 28th October 2020. Each of the surveyed trees has been individually numbered and added to the topographical survey base. The survey information recorded includes the following:

- Tree species
- An estimation of tree height
- An estimation of crown spread
- Tree condition observations
- Recommendations on remedial tree surgery / felling work
- Overall tree health categorisation, based on the criteria set out within BS 5837 'Trees in relation to design, demolition and construction' recommendations (2012)

The above survey information is recorded in the survey data schedule; see Appendix 1. The survey definitions are also included in this appendix. For the Tree Survey Plan see Appendix 2.

3.2 Tree Quality

3.2.1 The quality and value of the tree stock contained within the proposed re-development area has been broken down in accordance with the tree quality grading rationale as defined within BS 5837 'Trees in relation to design, demolition and construction' recommendations (2012), and can be summarised as follows:

A Grade – Trees of very high value and quality, sound and healthy in the foreseeable future.
B Grade – Trees of high value and quality may be defective but correctable, 30 years expectancy.
C Grade – Trees defective not correctable, limited useful life.
D Grade – Trees defective, dangerous, diseased or dead.

Quality and Value of Existing Tree Stock	A Grade	B Grade	C Grade	D Grade
Within the site boundary	0	0	18	0
Adjacent to the site boundary	4	8	31	1

See Table 1 in Appendix 1 for detail definitions.

3.3 Survey Observations

3.3.1 There are predominantly 2 species within the site and along the South boundary. These consist of Scots Pine (*Pinus sylvesteris*) and Silver Birch (*Betula pendula*).

3.3.2 There are 5 principal specimen trees separated by a watercourse from the site along its north boundary.

3.3.2 The condition of the majority of the other trees surveyed are low value with 3 trees in poor condition but all outside the site boundary.

3.4 Root Protection Areas and Tree Protection Plan (TPP)

3.4.1 The Root Protection Area (RPA) is the area shown in plan as a radius from the centre of the tree within which the tree roots must be protected from excavation and disturbance. Where disturbance cannot be avoided, such work must be monitored by an arboriculturalist and/or a Landscape Architect to ensure damage to the root system is minimised. The RPA areas have been set out in accordance with Table 2 of BS5837:2012. The RPA areas for the trees surveyed are shown on Plan 2, see Appendix 3.

3.5 Arboricultural Method Statement (AMS)

3.5.1 All existing trees to be retained are to be protected together with their root protection areas, by the temporary protective fence within the site, the site hoarding or the existing fence for the trees that surround the site.

3.5.2 The proposed re-alignment of the FW sewer shall be no greater than 2.5m from the south elevation of Unit A1 to safeguard nearby RPZ's of Trees 23, 24 and 25, all "C" category, on the South boundary.

3.5.3 The Arboriculturalist and/or the Landscape Architect shall inspect any trenching prior to laying the proposed FW drain to instruct on measures to protect and mitigate any potential damage to the principal tree roots. This will include vertical shoring and hand

digging in specific locations to limit the width of excavation. Such measures will be subject to CDM regulations.

3.5.4 The RPZ of all trees to be retained are illustratedd to remain in soft ground as part of the proposed works and no additional measures are required to protect root zones within paved areas.

3.5.5 Prior to commencement of works or preparation of the site, the Main Contractor shall provide details of the Arboriculturalist to monitor the protection measures, any excavation in close proximity to RPZ's and advise on crown lifting and thinning (refer to Para 3.6.3).

3.6 Tree Removal

3.6.1 The trees to be felled are indicated on Plan 2, see Appendix 3 and total 13Nr. out of 70Nr. trees surveyed. All the trees to be removed are considered low quality.

3.6.2 Felling and clearance works should not be undertaken during the bird nesting season from 1st March to 30th September unless an Ecologist is appointed and present to monitor for nesting activities. No nesting birds may be disturbed until all the young have fledged.

3.6.3 The canopy spread of trees to be retained are of a sufficient distance from the construction works and will not require additional works such as crown lifting or thinning. The Arboriculturalist may advise on removal of deadwood and crossing or weak limbs.

3.7 New Tree Planting

3.7.1 There are 100Nr. trees to be planted as part of the proposed works. The species are predominantly Field Maple, Birch and Hornbeam

3.8 Protective Barriers

3.8.1 To form the Construction Exclusion Zone, ensuring protection of the existing retained trees, a protective fence will be erected prior to diverting the FW sewer and other preparatory works within the site.

3.8.2 The protective fence is to be erected as indicated in Appendix 4.

3.8.3 The recommended barrier complies with the recommendations given in BS5837:2012. Refer to Appendix 5. The protective barrier is to be erected before any demolition works commence. Signs are to be attached to this fence at 25 metre intervals which state “Protected Trees - Do Not Damage”

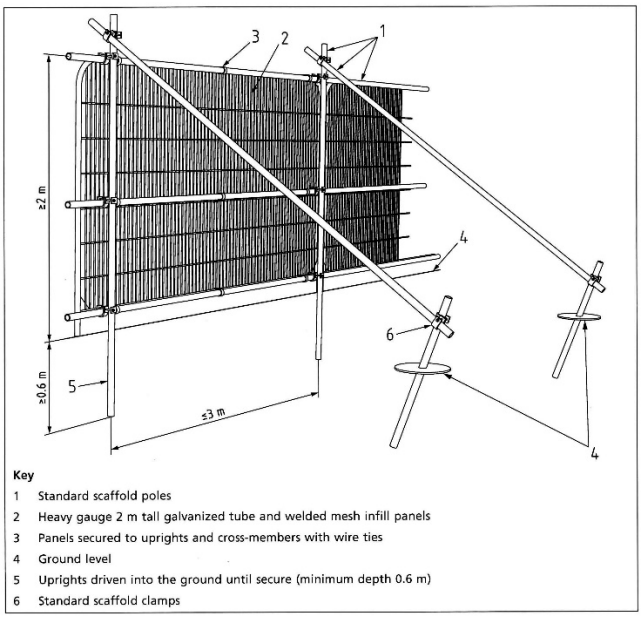

Temporary Protective Barrier

4 RECOMMENDATIONS

4.1 Supervision

4.1.1 It is recommended supervision is undertaken by an arboriculturalist and/or a Landscape Architect to locate the trees previously identified for felling as shown on the Tree Impact Assessment Plan, location of barriers and monitoring the FW sewer trench excavation works. Their duties should also include regular inspections of the barriers to protect the existing trees to be retained and this fencing shall be installed prior to any works. Periodic inspections during the construction works are to be undertaken to ensure the protective fencing remains in place until completion of all the works.

APPENDIX 1

Survey Definitions and Schedule

Survey Definitions

Plan Number	Corresponds number sequence on site plan drawing		
Species			
Tree Age	Expressed	ST	= Recently Planted 'Standard'
		SM	= Semi Mature
		YM	= Young Mature
		M	= Mature
Height in Metres	Measured using a clinometer.		
DBH in cm	Stem diameter measured at 1.5 Metres above ground level. Measurement taken in accordance with BS 5837: Trees in relation to design, demolition & construction – Recommendations (2012)		
Crown Spread	Approximate total crown spread estimated in metres across a single direction.		
Observations	Root Condition: The visual assessment of the rooting area, taking into consideration any evidence of physical damage, soil compaction, excavation work and/or drainage problems.		
	Stem Condition: The visual assessment of the stem and main scaffold branches. Inspecting for visible faults and wounds, and signs which may suggest the possibility of internal faults.		
	Leaf & Bud: The visual assessment of the amount and condition of foliage or bud development, when compared to the foliage of the surrounding trees of the same species.		
Recommendations.	The recommendations for any tree surgery work		
B.S 5837 Categories	Trees in relation to design, demolition & construction (2012)		
	Green	Trees of high quality and value:	
	Blue,	Trees of moderate quality and value:	
	Grey,	Trees of low quality and value:	
	Red,	Trees for removal:	

Root Protection Area

BS 5837 (2012) defines the 'Root Protection Area' (RPA) as a "layout design tool indicating the minimum area around a tree deemed to contain sufficient roots and rooting volume to maintain the tree's viability, and where the protection of the roots and soil structure is treated as a priority".
The calculation for the RPA area is based on a mathematical formula derived from a tree's stem diameter.

Re-inspection programme

In all cases it is recommended that mature trees are inspected at least twice per year, just after bud burst to assess leaf condition, and early Autumn to look for evidence of 'Decay Pathogens'.

Table 1 – Cascade chart for tree quality assessment

TREES FOR REMOVAL				
Category and definition	**Criteria (include subcategories where appropriate)**			**Identification on plan**
Category D Trees defective, dangerous, diseased or dead.	• Trees that have a serious, irremediable, structural defect, such that their early loss is expected due to collapse including those that will become unviable after removal of other U category trees (e.g. where, for whatever reason, the loss of companion shelter cannot be mitigated by pruning) • Trees that are dead or are showing signs of significant, immediate, and irreversible overall decline • Trees infected with pathogens of significance to the health and/or safety of other trees nearby or very low quality trees suppressing adjacent trees of better quality NOTE Category U trees can have existing or potential conservation value which it might be desirable to preserve:			DARK RED
TREES TO BE CONSIDERED FOR RETENION				
Category and definition	**Criteria – Subcategories**			**Identification on plan**
	1 Mainly arboricultural values	**2 Mainly landscape values**	**3 Mainly cultural values, including conservation**	
Category A Trees of very high value and quality, sound and healthy in the foreseeable future.	Trees that are particularly good examples of their species, especially if rare or unusual, or essential components of groups, or of formal or semi-formal arboricultural features (e.g. the dominant and/or principal trees within an avenue)	Trees, groups or woodlands of particular visual importance as arboricultural and/or landscape features	Trees, groups or woodlands of significant conservation, historical, commemorative or other value (e.g. veteran trees or wood-pasture)	LIGHT GREEN
Category B Trees of high value and quality may be defective but correctable, 30 years expectancy.	Trees that might be included in Category A, but are downgraded because of impaired condition (e.g. presence of remediable defects including unsympathetic past management and storm damage), such that they are unlikely to be suitable for retention beyond 40 years; or trees lacking the special quality necessary to merit the category A designation	Trees present in numbers, usually growing as groups or woodlands, such that they attract a higher collective rating than they might as individuals; or trees occurring as collectives but situated so as to make little visual contribution to the wider locality	Trees with material conservation or other cultural value	MID BLUE
Category C Trees defective not correctable, limited useful life.	Unremarkable trees of very limited merit or such impaired condition that they do not qualify in higher categories.	Trees present in groups or woodlands, but without this conferring on them significantly greater collective landscape value; and/or trees offering low or only temporary /transient landscape benefits.	Trees with no material conservation or other cultural value	GREY

Tree No.	Tree Species	Height (metres)	Spread (metres	Trunk diam. (mm)	Clear Trunk (metres)	Age	Amenity Value	Condition	Comment
1	Western Red Cedar	15.0	9.0	1100	2.2	O	A	1	
2	Beech	21.0	12.0	650	2.1	M	B	1	
3	Thuja	15.0	16.0	1000	0.7	O	A	1	
4	Caucasian Wingnut	23.0	15.0	1200	0.5	O	A	1	
5	Hawthorn	8.0	5.0	250	1.6	M	C	1	
6	Caucasian Wingnut	23.0	17.0	1500	-	O	A	1	
7	Caucasian Wingnut	23.0	16.0	600 x 4	-	O	B	1	
8	Silver Pendent Lime	15.0	9.0	750	2.2	M	B	1	
9	Small Leafed Lime	16.0	15.0	650	2.0	M	A	1	Ivy covered
10	European Lime	21.0	15.0	700	2.6	M	B	1	
11	Ash	13.0	9.0	275 x 3	-	Y	C	1	
12	Hawthorn x 2	7.0	3.0	200	-	Y	C	1	
13	Ash	11.0	8.0	350	2.8	Y	C	1	
14	Sycamore	16.0	8.0	600	2.5	Y/M	C	1	Ivy covered
15	Poplar	10.0	5.0	175 x 3	-	Y	C	1	
16	Ash x 3	5.0	4.0	100 x 4	-	Y	C	1	
17	Field Maple x 5	8.0	4.0	200	1.5	Y	C	1	
18	Field Maple x 2	6.0	4.0	200	1.7	Y	C	1	
19	Lawson Cypress	16.0	10.0	600	3.0	M	C	1	
20	Ash	24.0	9.0	500 x 2	-	M	C	1	
21	Ash	15.0	4.0	500	3.0	M	D	4	Split trunk
22	Silver Birch	18.0	9.0	400	3.0	M	C	1	
23	Silver Birch	15.0	9.0	450	2.2	M	C	1	
24	Silver Birch	12.0	3.0	250	2.0	Y	C	2	
25	Silver Birch	15.0	9.0	350	3.5	M	C	1	
26	Silver Birch	17.0	5.0	450	2.1	M	C	3	Subordinate
27	Scots Pine	24.0	12.0	800	5.0	M	C	1	
28	Silver Birch	12.0	9.0	300	1.2	M	C	3	Leaning
29	Scots Pine	26.0	9.0	750	2.0	M	C	1	
30	Scots Pine	21.0	8.0	750	5.0	M	C	3	Leaning
31	Silver Birch	21.0	8.0	350	3.0	Y/M	C	1	
32	Sycamore	22.0	6.0	400	1.8	Y/M	C	1	
33	Silver Birch	21.0	9.0	500 x 2	-	M	C	1	
34	Silver Birch	22.0	10.0	600	5.0	M	C	1	
35	Sycamore x 2	16.0	9.0	450	1.6	Y/M	C	1	
36	Aspen	25.0	16.0	900	3.0	M	B	1	
37	Silver Birch	24.0	16.0	600	2.8	M	B	1	
38	Alder	20.0	10.0	950	2.7	M	B	1	
39	Alder	18.0	9.0	800	-	M	C	2	
40	Alder	16.0	11.0	750	-	M	C	1	
41	Alder	17.0	10.0	450 x 3	-	M	C	1	
42	Alder	21.0	15.0	800	1.9	M	B	1	
43	Alder	7.0	9.0	700	2.5	M	D	3	
44	Horse Chestnut	16.0	10.0	600	2.1	Y/M	C	3	Subordinate
45	Norway Maple	16.0	9.0	600	2.6	Y/M	C	3	Lopsided growth
46	Austrian Pine	20.0	11.0	900	3.5	M	C	1	
47	Horse Chestnut	12.0	12.0	550	1.5	Y/M	C	3	
48	Sycamore	8.0	5.0	175	1.3	Y	C	1	
49	Sycamore	11.0	7.0	175 x 4	-	-	D	4	Dead
50	Bird Cherry x 4	16.0	7.0	350	2.5	Y	C	1	
51	Sycamore "Brilliantissimum"	10.0	6.0	300	2.2	Y	C	1	
52	European Lime	18.0	10.0	600	2.0	M	C	1	
53	European Lime	21.0	14.0	650	3.5	M	C	1	
54	European Lime	26.0	10.0	650	2.2	M	C	1	
55	Willow	17.0	5.0	200	1.7	Y	C	3	
56	Sycamore	20.0	14.0	550	2.2	Y/M	C	1	
57	Alder x 2	22.0	10.0	550	2.0	M	C	1	

APPENDIX 2

Tree Survey Plan 1

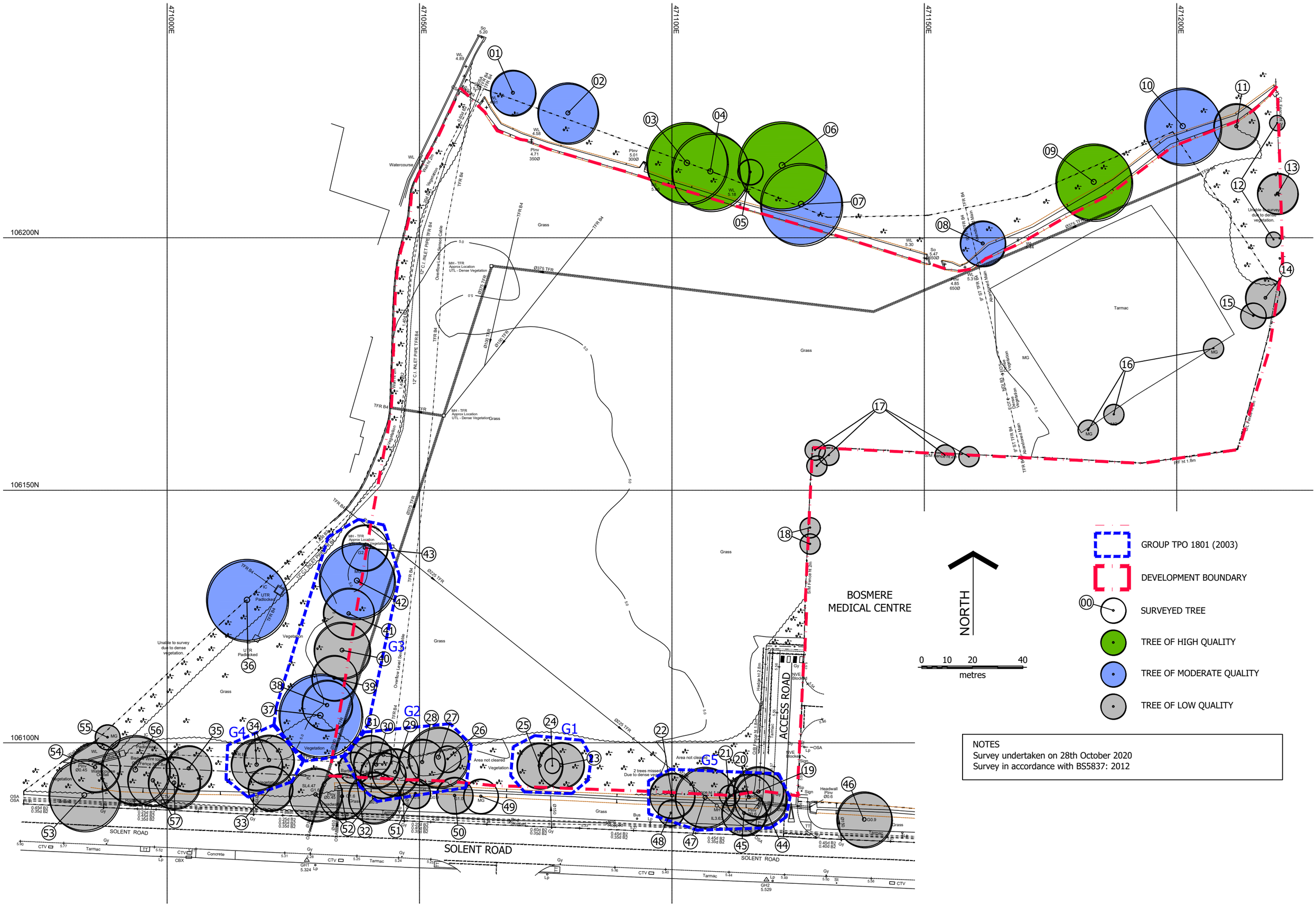

NOTES
Survey undertaken on 28th October 2020
Survey in accordance with BS5837: 2012

TREE SURVEY PLAN 1

APPENDIX 3

Tree Impact Assessment Plan 2

TREE IMPACT ASSESSMENT PLAN 2

Appendix 4
Tree Protection Plan 3

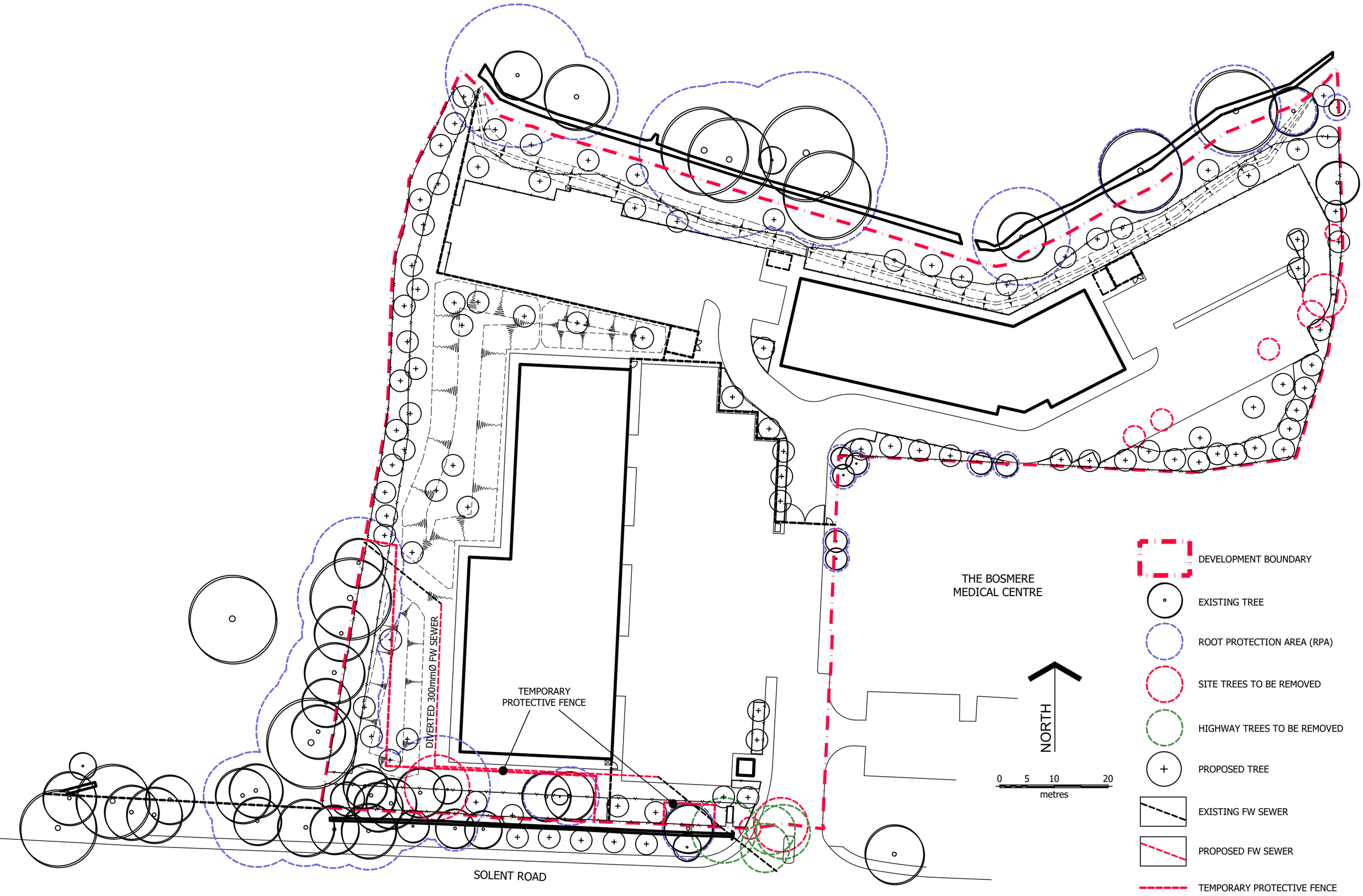

TREE PROTECTION PLAN 3

Appendix 5
Tree Protection Barrier

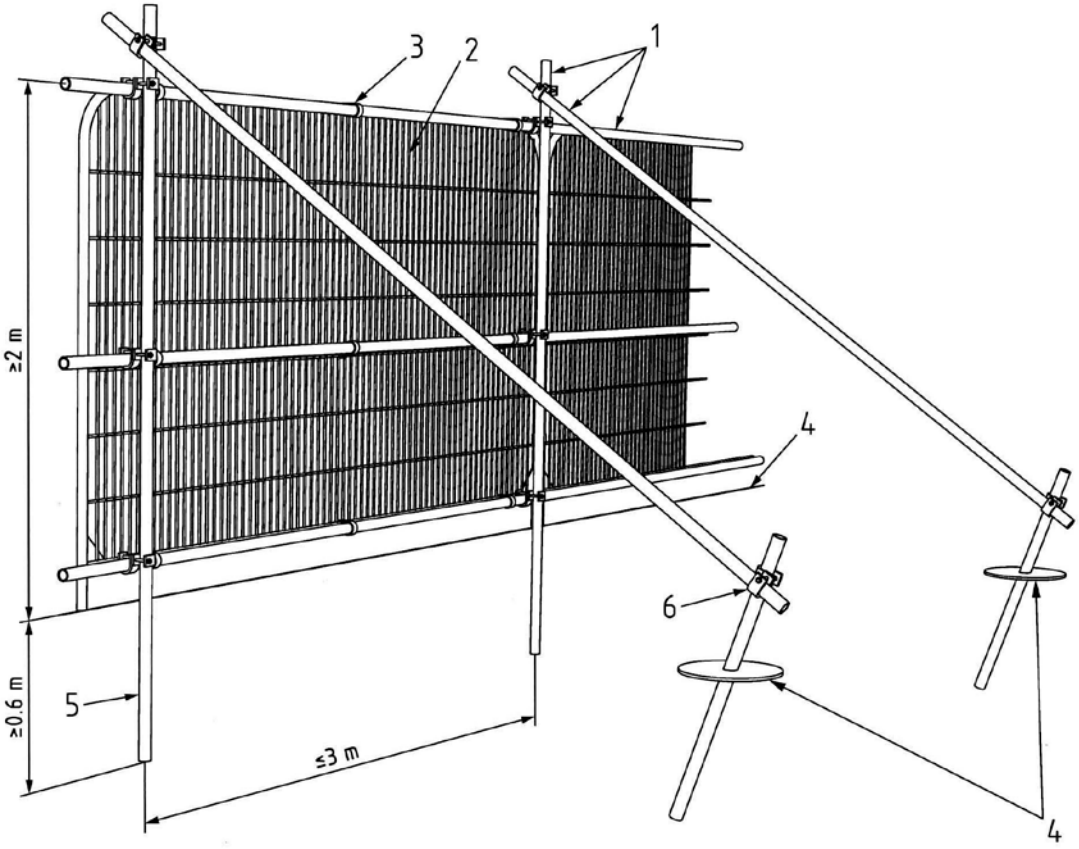

Key

1 Standard scaffold poles

2 Heavy gauge 2 m tall galvanized tube and welded mesh infill panels

3 Panels secured to uprights and cross-members with wire ties

4 Ground level

5 Uprights driven into the ground until secure (minimum depth 0.6 m)

6 Standard scaffold clamps

Photographs

Facing south to Solent Road across the site

Solent Road boundary

Caucasian Wingnuts adjacent to the north boundary