LANGSTONE PARK

Batch 1 signage

July 2021

Indent

TOTEMS

A (3m high x 1.5m)

185mm margins

B (4m high x 1.5m)

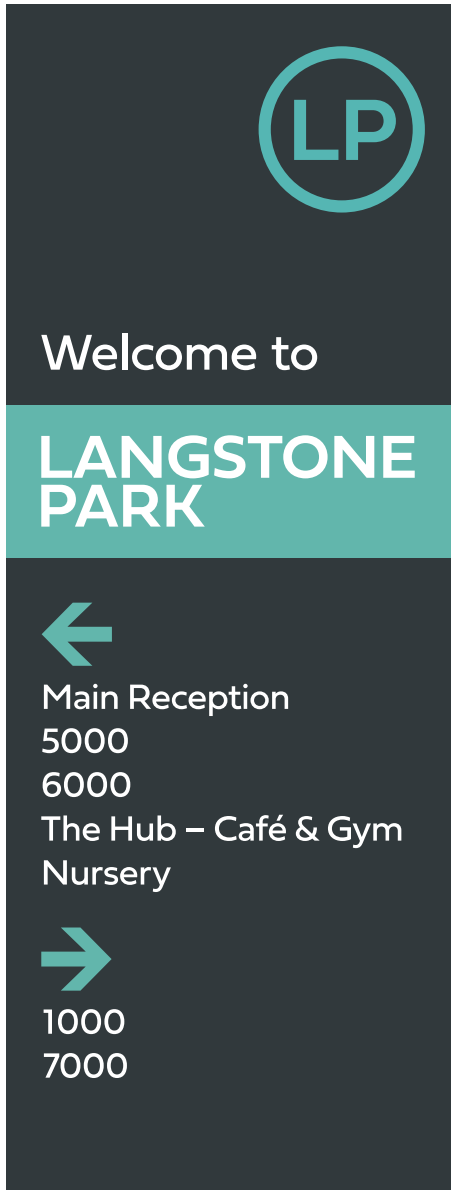

120mm margins

C (4m high x 1.5m)

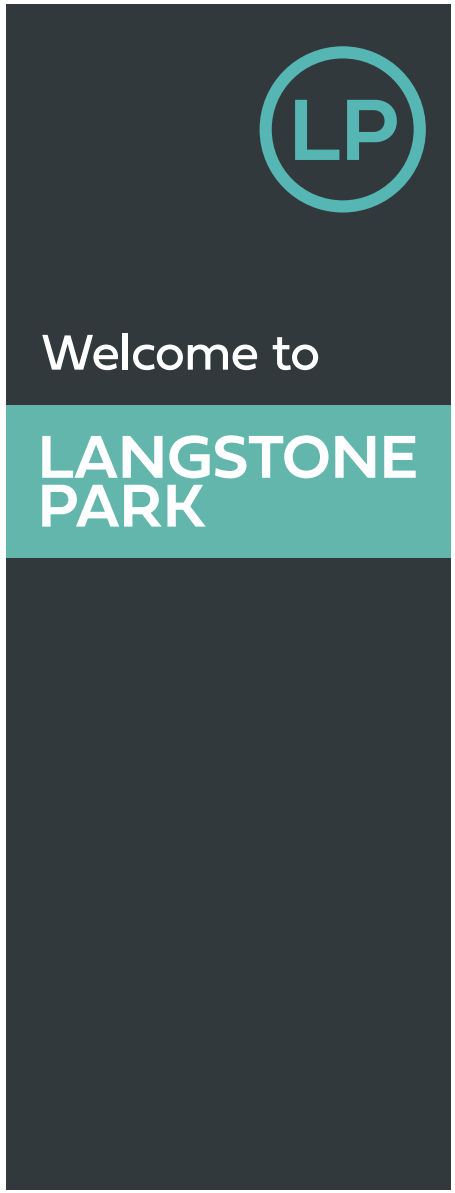

120mm margins

D (3m high x 1.5m)

120mm margins

MARKETING BOARDS

M1 & M2

BUILDING 1000 NORTH FRONTAGE

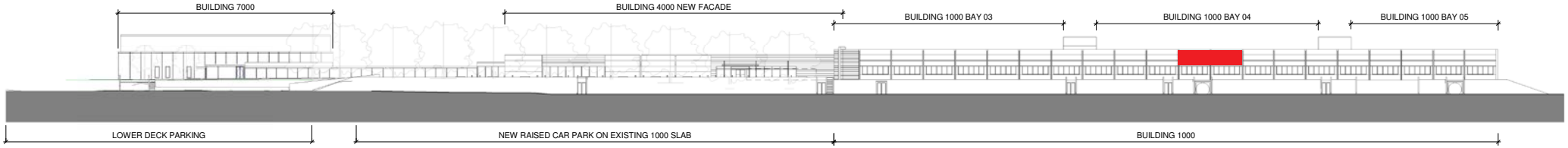

CGI: FLEX SIGN WITH WHOLE FACE BACK LIT

SIGNAGE SURVEY + BATCH 1 SIGN POSITIONS

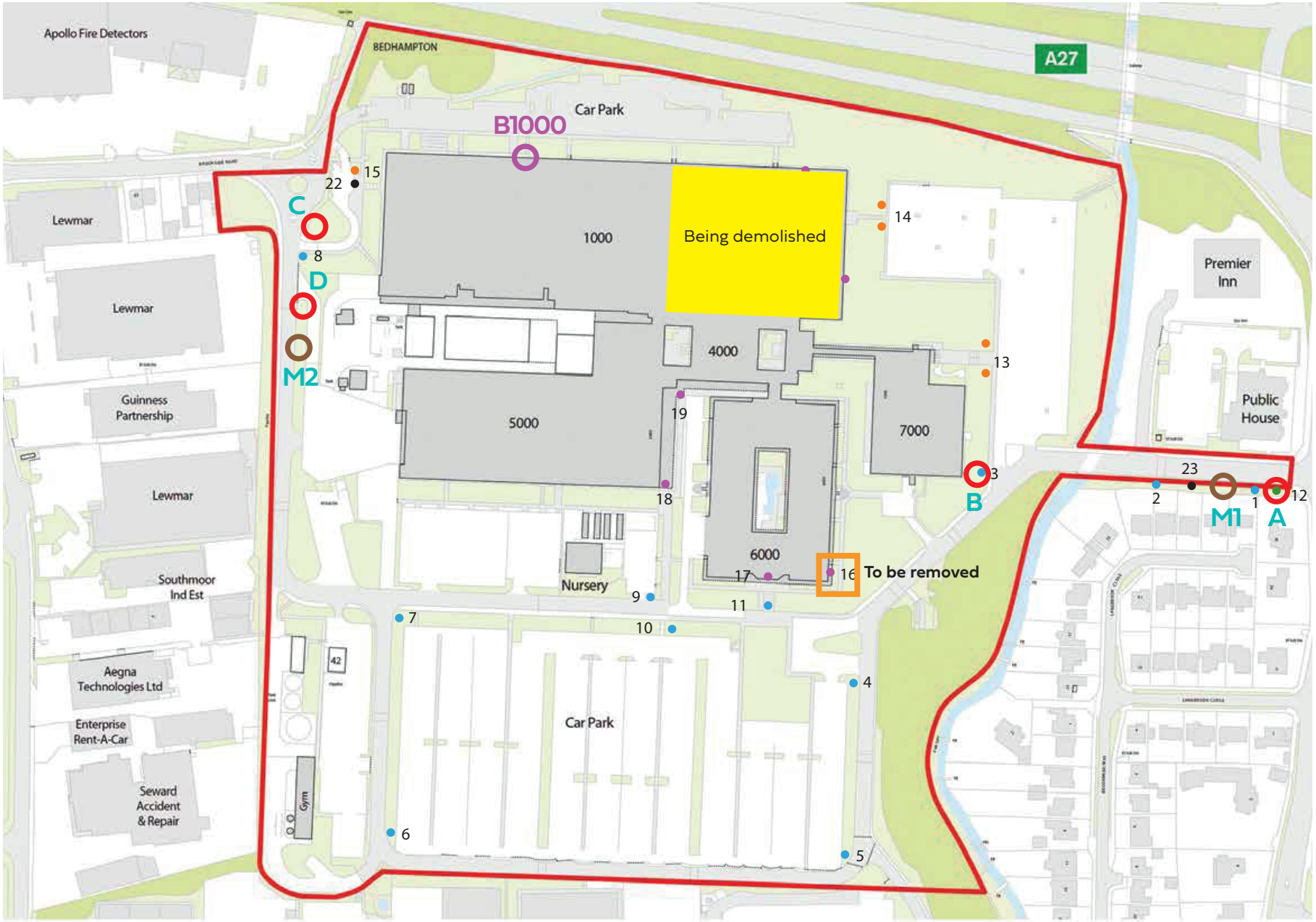

NEW

- **Totem**
- **Marketing board**
- **Building sign**

EXISTING

- Estate Totem
- Existing Wayfinding
- Building Totem Signage
- Building Mounted Signage
- Marketing Board

LP
LANGSTONE PARK
A
LANGSTONE PARK
OFFICES
LABORATORIES
WAREHOUSES
M1

LP
LANGSTONE PARK
Goods inward
Loading bay
Parking
The Hub – Café & Gym
Nursery
D
STOP
LP
LANGSTONE PARK
OFFICES
LABORATORIES
WAREHOUSES
www.langstonepark.com
M2

SIGNAGE BATCH 1 PRODUCTION ESTIMATE

MAIN ENTRANCE

Estate totem A
Internal mild steel frame with baseplates. Oxide coated and bolted down to a pre-formed concrete foundation.
3mm aluminium sign panels with folded inverted returns, finished to RAL colour and fitted to steel frame.
20mm detail logo finished to RAL colour bonded to sign face with VHB tape and face applied self adhesive vinyl detail
1500mm x 3000mm
Groundworks, waste and signage disposal, hiab and installation

New marketing board M1
Full colour digitally printed ACM panels. Fitted to white coated side mounted steel posts. Posts concreted into position. Inc installation
2440mm x 3000mm

Wayfinding totem B
Internal mild steel frame with baseplates. Oxide coated and bolted down to a pre-formed concrete foundation.
3mm aluminium sign panels with folded inverted returns, finished to RAL colour and fitted to steel frame.
20mm detail logo finished to RAL colour bonded to sign face with VHB tape and face applied self adhesive vinyl detail
1500mm x 4000mm
Groundworks, waste and signage disposal, hiab and installation

Building 6000
To remove and dispose of building 6000 logo

HARTS FARM WAY

Estate Totem C
Internal mild steel frame with baseplates. Oxide coated and bolted down to a pre-formed concrete foundation.
3mm aluminium sign panels with folded inverted returns, finished to RAL colour and fitted to steel frame.
20mm detail logo finished to RAL colour bonded to sign face with VHB tape and face applied self adhesive vinyl detail
1500mm x 4000mm
Groundworks, waste and signage disposal, hiab and installation

New marketing board M2
Full colour digitally printed ACM panels. Fitted to white coated side mounted steel posts. Posts concreted into position. Incs installation
2440mm x 3000mm

Wayfinding totem D
Internal mild steel frame with baseplates. Oxide coated and bolted down to a pre-formed concrete foundation.
3mm aluminium sign panels with folded inverted returns, finished to RAL colour and fitted to steel frame.
20mm detail logo finished to RAL colour bonded to sign face with VHB tape and face applied self adhesive vinyl detail
1500mm x 3000mm
Groundworks, waste and signage disposal, hiab and installation

Building 1000 Flex specification illuminated - whole face backlit
13160 x 3525
Powder coated extruded aluminum banner frame system fixed to building. Digitally printed liquid laminated pvc banner fixed to profile using tension clips. Inc installation

The P10 drawing shows the illuminated version.

(Power supply would be client's responsibility to provide).

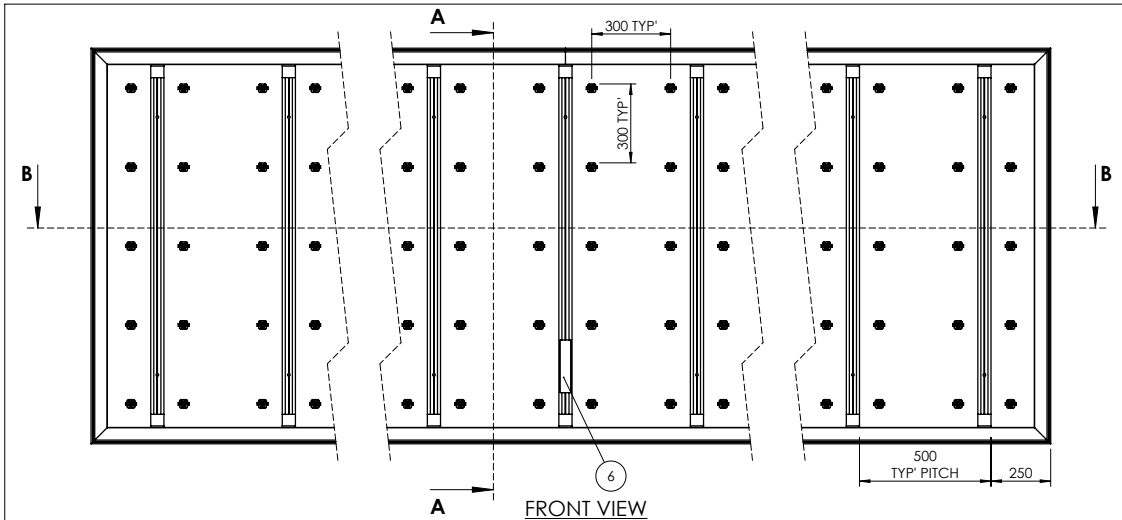

FRONT VIEW
(FACE MATERIAL REMOVED FOR CLARITY)
SCALE 1:20

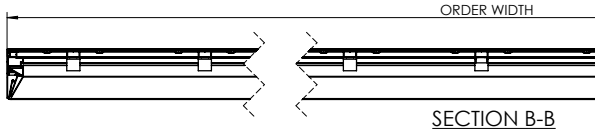

SECTION B-B

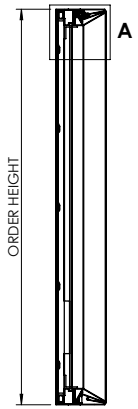

SECTION A-A

DO NOT SCALE
IF IN DOUBT ASK

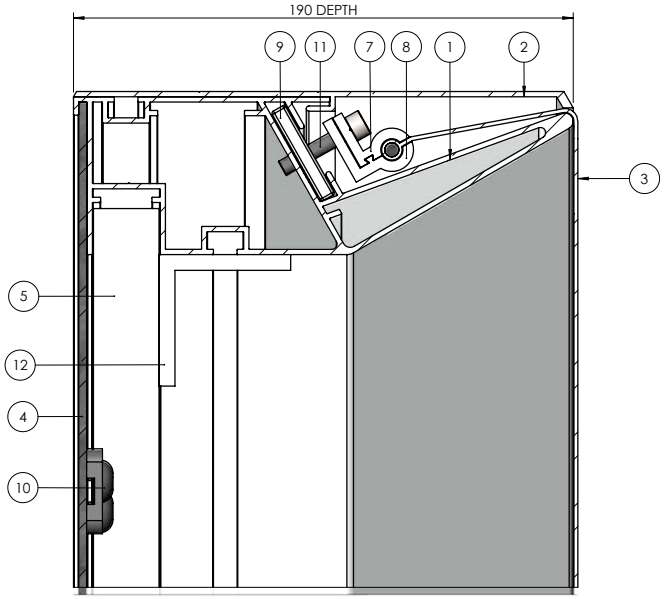

DETAIL A
SCALE 1 : 2

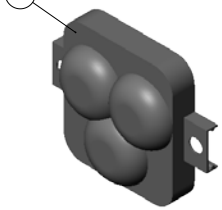

DETAIL B
SCALE 1 : 1

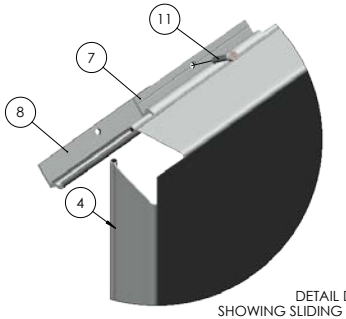

DETAIL D
SHOWING SLIDING SPLIT CLAMP
SCALE 1 : 2

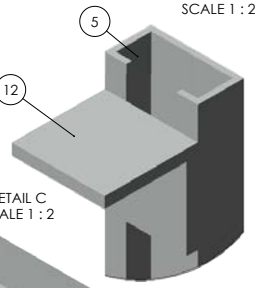

DETAIL C
SCALE 1 : 2

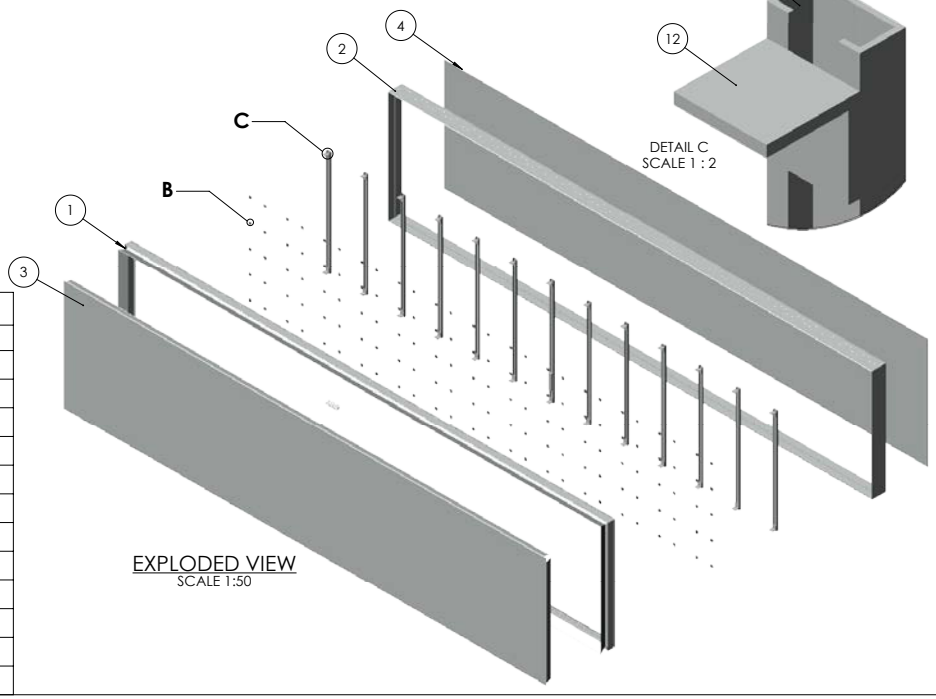

EXPLODED VIEW
SCALE 1:50

BILL OF MATERIALS SPRINGFLEX 190

ITEM NO.	DRAWING No/REF	QTY	FINISH	NOTES
1	BODY SF2415M	1		
2	COVER SF1552	1		
3	FACE MATERIAL	1		C/W TENSION BAR
4	BACKPLATE	1		1-3mm THICKNESS RANGE
5	WALL BAR SF1577M	AS REQ'		500mm PITCH TYPICALLY
6	LED CONVERTER	1		
7	SPLIT CLAMP A	AS REQ'		TWO SIZES 150 & 295mm
8	SPLIT CLAMP B	AS REQ'		TWO SIZES 150 & 295mm
9	TENSION BAR	AS REQ'		
10	LED MODULE	AS REQ'		300mm GRID FORMATION
11	M6 TORX CAP SCREW	AS REQ'		
12	50x50x6 ANGLE	2 PER WALL BAR		

REV.	DATE	DESCRIPTION	BY
A	01-01-19	HD SLIDE CLAMP DETAIL D ADDED	R.L

THIS DRAWING IS THE PROPERTY OF KSUK LTD AND MAY NOT WITHOUT THE EXPRESS WRITTEN CONSENT OF THE COMPANY BE COPIED IN WHOLE OR IN PART OR USED FOR ANY OTHER PURPOSE THAN THAT FOR WHICH IT IS SUPPLIED

GENERAL TOLERANCES UNLESS OTHERWISE STATED
0 DECIMAL PLACES +/- 1mm
1 DECIMAL PLACE +/- 0.5mm
2 DECIMAL PLACES +/- 0.15mm
ANGULAR DIMENSIONS +/- ½°

DRAWING TITLE: SPRINGFLEX HD 190
PRODUCT RANGE: SPRINGFLEX
PROJECT No: IDS-236
DATE: 04-12-18
PAPER: A3
DRAWN: R.L
CHKD: -
SCALE: N.T.S
DWG No.: IDS-236-005
REV: A

mothercare
early learning centre
Carpet RIGHT
sleep right beds
Beds Carpet Laminate Rugs Vinyl
Carpet
sage

PC World
THE COMPUTER SUPERSTORE
NOWHOW
SPRING VALUE
Massive stock clearance
sage

mothercare
early learning centre
Carpet RIGHT
Currys
sage

PC World
THE COMPUTER SUPERSTORE
sage

INDENT
THANKS YOU

Indent

Indent Design Limited

2 Denmark Road
Reading RG1 5PA

0118 9861672