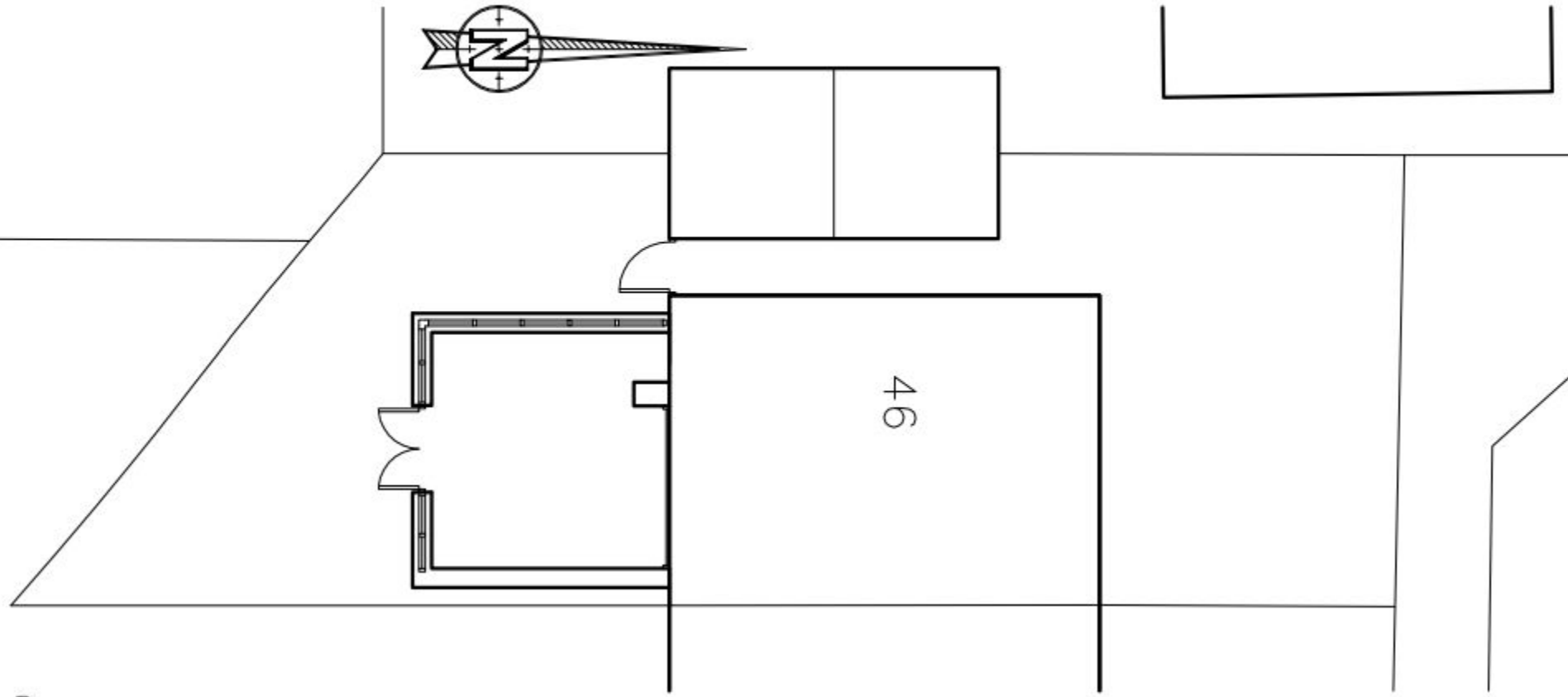

ASBUILT FLOOR PLAN

0m 1m 2m 3m 4m 5m 6m 7m 8m 9m 10m

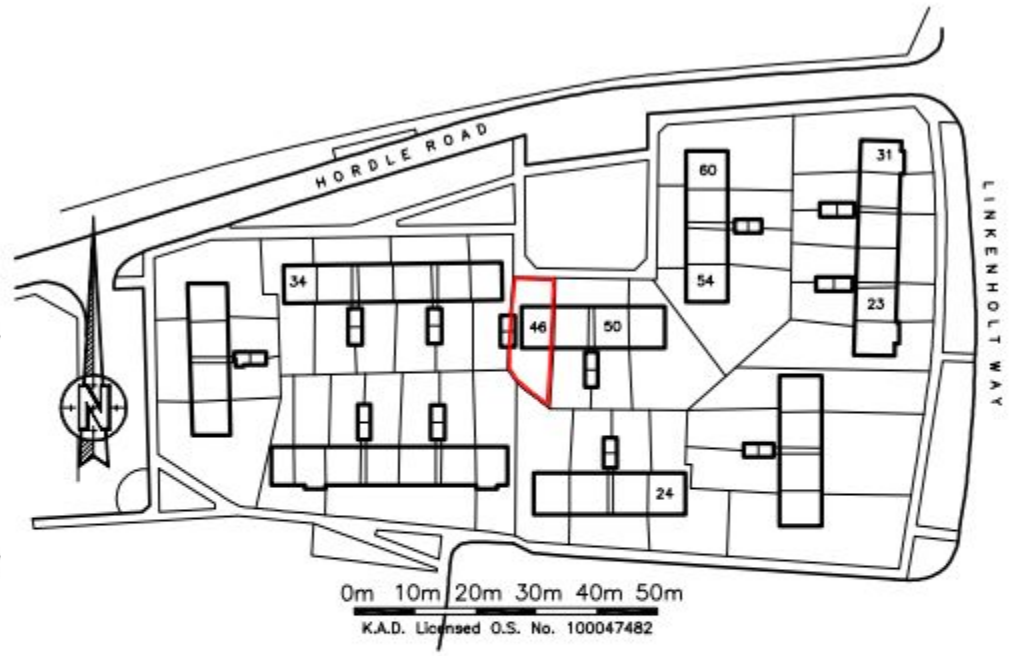

LOCATION
PLAN @ 1:1250

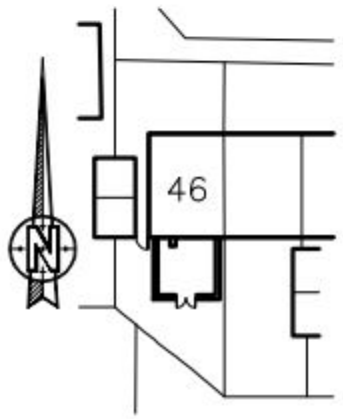

BLOCK PLAN @ 1:500

PERMI

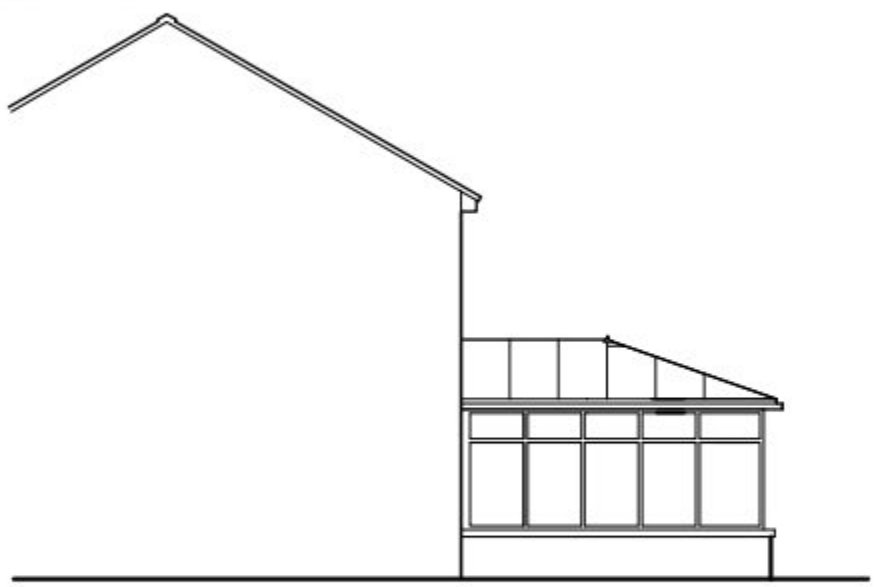

ASBUILT SECTIONAL ELEVATION

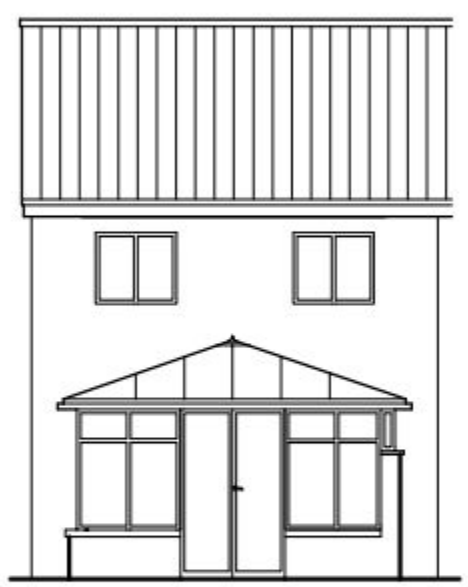

ASBUILT REAR ELEVATION

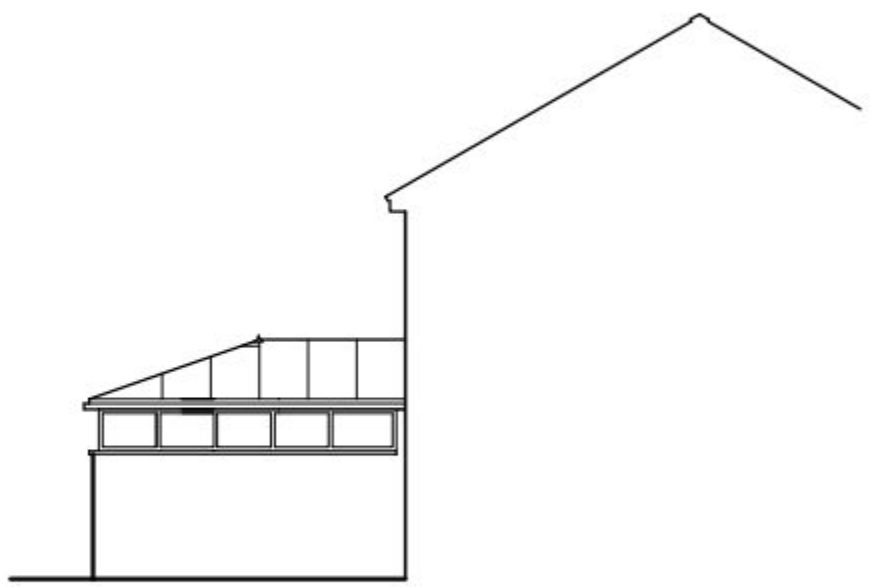

ASBUILT SIDE ELEVATION

Rev	Revision	By	Date

KNIGHT ARCHITECTURAL DESIGN
Ian Knight
K.A.D.
181 Kathleen Road
Sholing
Southampton
SO19 8GX
m: 07801 34 64 79
t: 023 80 420 938
e: ian.kad@ineone.net

Client
MR & MRS BRITTEN

Project
46 HORDLE ROAD
HAVANT
HAMPSHIRE
PO9 4BA

Drawing
RETROSPECTIVE
APPLICATION FOR
CONSERVATORY

Scale	Date
1:100@A3	JAN 11

Project no.	Sequential	Bldg/Floor	Detail	Rev
KAD	01	A	GL	A