LARCHWOOD AVENUE, BEDHAMPTON, HAVANT

ARBORICULTURAL METHOD STATEMENT

A Report to: Savills

Report No: RT-MME-122638-03

Date: July 2016

Triumph House, Birmingham Road, Allesley, Coventry CV5 9AZ
Tel: 01676 525880 Fax: 01676 521400
E-mail: admin@middlemarch-environmental.com Web: www.middlemarch-environmental.com

REPORT VERIFICATION

This study has been undertaken in accordance with British Standard 5837:2012 “Trees in relation to design, demolition and construction - Recommendations”.

Report Version	Date	Completed by:	Checked by:	Approved by:
Final	14/07/16	Marco Bartolini TechArborA, GradCIEEM, FdScWM, Dip Mgmt (Arboricultural Consultant)	Ed Lusk HND, PTI (Principal Arboricultural Consultant)	Dr Philip Fermor CEnv, MCIEEM (Managing Director)

DISCLAIMER

The contents of this report are the responsibility of Middlemarch Environmental Ltd. It should be noted that, whilst every effort is made to meet the client’s brief, no site investigation can ensure complete assessment or prediction of the natural environment.

Middlemarch Environmental Ltd accepts no responsibility or liability for any use that is made of this document other than by the client for the purposes for which it was originally commissioned and prepared.

VALIDITY OF DATA

The findings of this study are based upon the data provided by the client (listed within Table 1.1, Section 1.1). If the development proposals change then this report will require updating to ensure that all aspects are covered within this document and the trees are adequately protected during the development.

CONTENTS

1. INTRODUCTION 3

1.1 PROJECT INTRODUCTION 3
1.2 SITE DESCRIPTION 4
1.3 TREE RETENTION AND REMOVAL & PRE-DEVELOPMENT TREE WORKS 4

2. ARBORICULTURAL METHOD STATEMENT 5

2.1 INTRODUCTION 5
2.2 CONSTRUCTION EXCLUSION ZONE 5
2.3 PROTECTIVE BARRIERS 5
2.4 GROUND PROTECTION 5
2.5 PRECAUTIONS IN RESPECT OF TEMPORARY WORKS 6
2.6 ACCESS DETAILS 6
2.7 CONTRACTORS CAR PARKING 6
2.8 SITE COMPOUND 6
2.9 STORAGE SPACE 6
2.10 INFRASTRUCTURE REQUIREMENTS 6
2.11 DEMOLITION, HARD SURFACE REMOVAL & REMOVAL OF STRUCTURES 6
2.12 NEW HARD SURFACES 7
2.13 SITE GRADIENTS 7
2.14 CONSTRUCTION OF STRUCTURES WITHIN THE RPA/CONSTRUCTION EXCLUSION ZONE 7
2.15 SOFT LANDSCAPING 7
2.16 USE OF HERBICIDES 7
2.17 ON SITE MONITORING REGIME & CONTACT DETAILS 7
2.18 USE OF SUBCONTRACTORS 8
2.19 CONTINGENCY PLAN FOR SOIL CONTAMINATION 8
2.20 REMEDIAL TREE WORKS AND TREE REMOVAL 8
2.21 RESPONSIBILITIES 8
2.22 GENERAL PRECAUTIONS 9

3. DRAWINGS 10
REFERENCES AND BIBLIOGRAPHY 12
APPENDICES 13

APPENDIX 1 14
APPENDIX 2 17

1. INTRODUCTION

1.1 PROJECT INTRODUCTION

In May 2016 Savills commissioned Middlemarch Environmental Ltd to compile an Arboricultural Method Statement in respect of the proposed development of land off Larchwood Avenue in Bedhampton, Havant.

Middlemarch Environmental Ltd has previously carried out a Preliminary Ecological Appraisal and a Combined Arboricultural Survey and Impact Assessment for Savills at this site. The findings of these surveys are detailed in Report Numbers RT-MME-122638-01 and RT-MME-122638-02 respectively.

The proposed development of the site is the construction of a new KFC restaurant building off Larchwood Avenue with associated car parking and access facilities.

This document has been prepared to support the information necessary for the proposed development in respect of the forthcoming Planning Application for this site.

Table 1.1 details those drawings and documents, in addition to the Middlemarch Environmental Ltd Report referred to above, that have been considered during the preparation of this document.

Author	Title	Drawing Number	Date
CTES Surveying	Proposed KFCDT Land Next to McDonalds Larchwood Avenue, Havant (PO9 3QW)	N/A	January 2016
@ Architect Ltd	Proposed Site Plan for Planning	0000/2011/B122/14-0062	February 2016

Table 1.1: Drawings and Documents Considered

1.2 SITE DESCRIPTION

The site under consideration is a former car parking area located off Larchwood Avenue, Bedhampton, Havant in the county of Hampshire. The site is generally rectangular in shape, approximately 0.23 hectares in size and centred at Ordnance Survey Grid Reference SU 6961 0758.

At the time of the Arboricultural survey (May 2016), the site comprised a disused car park which was becoming overgrown with self-set scrub and developing trees. Linear groups of shelterbelt highway trees were present towards the northern, eastern and western boundaries that framed the site. The majority of trees were growing upon elevated sections of land beyond retaining walls. All of the trees provided good visual separation from adjacent neighbouring commercial businesses.

The site was bound to the east and west by Larchwood Avenue, beyond which were commercial businesses. To the south the site abuts the access road to the car park of the ASDA Havant Supercentre, whilst to the north the site extends to abut the access road to an existing McDonald's retail building.

The location of the trees under consideration can be found on Middlemarch Environmental Ltd Drawing Number C122638-03-01, Section 3.

1.3 TREE RETENTION AND REMOVAL & PRE-DEVELOPMENT TREE WORKS

A small number of groups or scrub or self-set developing trees require removal to achieve the approved development. The groups to be removed are identified on the Tree Protection Plan Drawing Number C122638-03-01 (Section 3) and in Table 1.2 below.

Tree No.	Species	BS5837 Category
G2	Mixed Species	C2
G3	Mixed Species	C2
G7	Mixed Species	C2

Table 1.2: Trees to be Removed

Overall three groups of scrub and self-set trees are to be removed to achieve the approved development.

The specific working practices to be adopted during all tree works are specified in Section 2.20.

2. ARBORICULTURAL METHOD STATEMENT

2.1 INTRODUCTION

The following sections of this report detail the specific measures to be adopted to ensure the protection of retained trees during the proposed development.

The site contractor must ensure that they read and understand all of the following sections prior to commencement of any onsite works.

2.2 CONSTRUCTION EXCLUSION ZONE

The Construction Exclusion Zone is the area considered necessary to ensure that the tree roots and canopy are protected from damage during the construction processes. The extent of the exclusion zone is based upon guidance within BS5837:2012 'Trees in relation to design, demolition and construction – Recommendations' in particular the diameter of the stem of each tree (when measured at a height of 1.5m from ground level) in combination with the canopy spread of the tree is considered.

The exclusion zones are to be defined on site throughout the course of the development by the use of protective barriers as described below.

The Construction Exclusion Zones are to be afforded protection at all times. No works that cause compaction of the soil or severance of tree roots, except where undertaken in accordance with the guidance provided within this document, will be undertaken within any exclusion zone.

2.3 PROTECTIVE BARRIERS

The protective barriers will be erected prior to the commencement of any site works e.g. before any materials or machinery are brought on site or the stripping of soil commences. Signs will be installed on the protective barriers to inform site staff of responsibilities and these will include the headings listed in Appendix 1.

The locations of the protective barriers to be installed are shown on the Tree Protection Plan; Drawing Number C122638-03-01, Section 3.

The protective barriers are to be constructed in accordance with the specification detailed in BS5837:2012 (Figure 2; Appendix 2). Any variation to the specification of the protective barrier will be agreed with the Local Planning Authority Arboricultural Officer.

The Construction Contractor will inform the Project Arboriculturist when the protective barriers have been installed and the Project Arboriculturist will attend site to confirm that they have been installed in accordance with the Tree Protection Plan. The Local Planning Authority will be notified in writing once this inspection has been undertaken.

The barriers will remain in place until completion of the development and then they will only be removed with the consent of the Local Planning Authority to permit completion of the scheme.

Other than works detailed within this method statement or approved in writing by the Local Planning Authority no works, including storage or dumping of materials, shall take place within the Construction Exclusion Zone as defined by the protective barrier.

2.4 GROUND PROTECTION

It is not considered necessary to install ground protection upon this site as the majority of proposed works are to be conducted outside of the Root Protection Areas of the retained trees.

2.5 PRECAUTIONS IN RESPECT OF TEMPORARY WORKS

No temporary access to the exclusion zones defined by the protective fencing is expected to be required. As such, impacts to retained trees from temporary access are not anticipated.

2.6 ACCESS DETAILS

Construction Vehicles
It is understood that construction traffic will access the site via the existing road network. Tree protection barriers will be installed to protect nearby trees from potential impact damage and to prevent vehicles from accidentally encroaching onto areas of unprotected ground within the RPAs of retained trees.

Pedestrians
It is understood that pedestrian access to the site during construction will utilise the existing road and path network.

2.7 CONTRACTORS CAR PARKING

It is understood that contractor's car parking is to be provided within the site in locations well away from the retained trees. Indicative locations for contractor's car parking are illustrated on the Tree Protection Plan; Drawing Number C122638-03-01 in Section 3 of this report.

No car parking will be provided within the Construction Exclusion Zone.

Should the demand for car parking exceed the available area alternative offsite parking arrangements will be made.

2.8 SITE COMPOUND

An indicative location for the site compound is shown on the Tree Protection Plan; Drawing Number C122638-03-01, Section 3.

There are numerous potential locations for the site compound which fall outside of the Construction Exclusion Zone and would not cause harm to retained trees.

2.9 STORAGE SPACE

Indicative locations for site storage areas are shown on the Tree Protection Plan; Drawing Number C122638-03-01, Section 3.

There are several locations within and surrounding the site where site storage areas can be established outside of the Construction Exclusion Zone and without causing harm to retained trees.

2.10 INFRASTRUCTURE REQUIREMENTS

It is expected that any new underground services will primarily be located outside of retained trees RPAs, and that connections will be made into existing services in areas outside of the Construction Exclusion Zone. If any underground services are to be installed within the RPA of a retained tree then the Project Arboriculturist will be consulted (see Section 2.17 for contact details). The methodology for the installation, maintenance or removal of any services within a RPA will be in accordance with NJUG Volume 4 'Guidelines for the Planning, Installation and Maintenance of Utility Services in Proximity to Trees'. This will include hand dug "broken" trenches to ensure that maximum protection is given to tree roots.

2.11 DEMOLITION, HARD SURFACE REMOVAL & REMOVAL OF STRUCTURES

There are no existing buildings, structures or hard surfaces present on site that require demolition or removal.

2.12 NEW HARD SURFACES

No new hard surfaces are proposed for construction with the RPA of any retained tree.

2.13 SITE GRADIENTS

It is understood that, to prevent damage occurring to retained trees, no alterations of soil level will take place within the exclusion zones as defined by the protective barriers.

If site gradient alterations within the RPA of any retained tree are required then the Project Arboriculturist will be consulted for advice (see Section 2.17 for contact details).

2.14 CONSTRUCTION OF STRUCTURES WITHIN THE RPA/CONSTRUCTION EXCLUSION ZONE

Boundary Walls
The construction of a new retaining wall associated with the new Drive Thru access road is expected to fall partially within the RPA of Tree Number 2. The following details will be adhered to for any walls to be constructed within the Construction Exclusion Zone.

The location of the wall piers will be determined in consultation with the Project Arboriculturist, to ensure that the potential for harm to occur to the roots of retained trees is minimised.

Where walls will traverse the RPA of retained trees the sections between the piers will be suspended above existing ground level upon beams. The final specification for the construction of the walls will be determined in consultation with the Project Arboriculturist and the Site Engineer.

2.15 SOFT LANDSCAPING

Any soft landscaping within the exclusion zone will be undertaken by hand. A 500 mm radius from any tree trunk will remain uncovered by turf or other planting to allow penetration of water and air into the soil.

2.16 USE OF HERBICIDES

Any herbicide used during the development works shall be systemic, spot applied, and mixed according to manufacturers' recommendations.

2.17 ON SITE MONITORING REGIME & CONTACT DETAILS

All operations will be monitored by the main contractor. The main contractor will ensure that all works within this document are followed (this will be built into the contract specification).

If any issues arise in relation to the retained trees the Project Arboriculturist will be contacted for advice. The Project Arboriculturist for the development is:

Name: Marco Bartolini
Position: Arboricultural Consultant
Company: Middlemarch Environmental Ltd
Address: Triumph House, Birmingham Road, Coventry, CV5 9AZ
Telephone: 01676 525 880
Mobile: 07557 154 175

The contact details for the Local Authority Arboricultural Officer is:

Havant Borough Council,
Public Service Plaza, Civic Centre Road, Havant, PO9 2AX.
Telephone 023 9244 6015:

Induction and Personnel Awareness
Details of tree protection and methods of working around trees will be included within site inductions to new members of site staff.

A copy of this document and the related Tree Protection Plan will be kept on site and accessible to staff.

Monitoring/Audits
A pre-commencement site meeting will be arranged between the contractor, Project Arboriculturist and any other interested party. During this meeting all outstanding items will be finalised and these will be communicated to the Local Planning Authority.

An inspection audit will be undertaken by a suitably experienced Arboriculturist once the protective barriers have been installed. Feedback will be provided to the Local Planning Authority Arboricultural Officer on completion of this visit. Following on from this monthly audits of the tree protection will be undertaken, for a total of four Tree Protection audits.

Works Requiring Arboricultural Supervision
The removal of hard surfaces within the RPA of Groups 1, 5 and 6 will be completed under supervision of the Project Arboriculturist.

2.18 USE OF SUBCONTRACTORS

The main contractor will be responsible for ensuring sub-contractors do not carry out any process or operation that is likely to adversely impact upon any tree on site.

2.19 CONTINGENCY PLAN FOR SOIL CONTAMINATION

Water will be available on site to wash down the trees stems and canopy in the event of dust from the demolition process accumulating upon them.

Water will be readily available on site and will be used to flush spilt materials through the soil and avoid contamination to tree roots. At the time of any spillage the main contractor will contact the Project Arboriculturist for advice (See Section 2.17 for contact details).

Where any vehicles or plant are to be operated or parked in a static location within the site they must be sited on a spill berm containment mat. All vehicles and plant operating internally to the site must carry a suitable spill containment and absorption kit.

2.20 REMEDIAL TREE WORKS AND TREE REMOVAL

All tree works are to be completed prior to commencement of construction works and installation of the protective barriers. The tree groups to be removed are detailed in Table 1.2.

All tree works are to be completed by suitably qualified and insured arboricultural in accordance with BS3998:2010 ‘Tree Work – Recommendations’.

Where the removal of tree stumps is required and the works will be undertaken within 15 m of any retained tree then they will be ground out using a proprietary stump grinder and they will not be removed by winching or mechanical excavation.

2.21 RESPONSIBILITIES

It will be the responsibility of the main contractor to ensure that the planning conditions attached to the planning consent are adhered to at all times and that a monitoring regime in regards to tree protection is adopted on site.

The main contractor will be responsible for contacting the Local Planning Authority should any issues are raised related to the trees on site.

If pruning works to trees are required at any time then permission must be sought from the Local Planning Authority first and then the works must be carried out in accordance with BS3998:2010 'Recommendations for Tree Work'.

The main contractor will ensure the build sequence is appropriate to ensure that no damage occurs to the trees during the construction processes. Protective barriers will remain in position until completion of all construction works on the site.

The barriers and signs will be maintained in position at all times and checked on a regular basis by a designated person on site.

2.22 GENERAL PRECAUTIONS

No materials that are likely to have an adverse effect on tree health such as oil, bitumen or cement will be stored or discharged within 10 m of the trunk of any tree that is to be retained. No fires will be lit within 20 m of the trunk of any tree that is to be retained.

3. DRAWINGS

Drawing Number C122638-03-01 - Tree Protection Plan

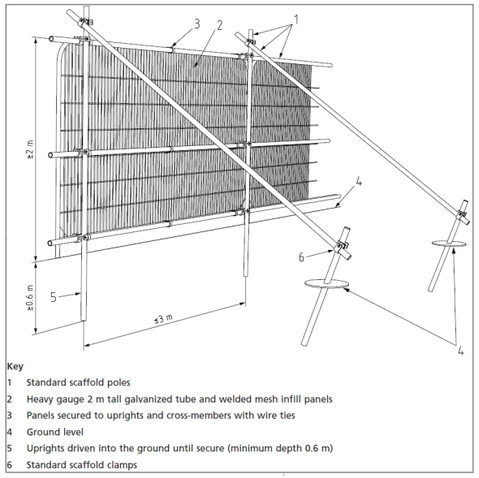

469550 469600 469650

107600 107550

Larchwood Avenue

G1 G2 G3 G4 G5 # G6 # G7

A B C D 1 2 3 4 5 6 7 8 9 10 11 12 13 14 15 16 17 18 19

0 20 40 m

C122638-03-01

Legend

- Category B tree
- Category C tree
- Category B group
- Category C group
- Category C group to be removed
- Current canopy - tree to be retained
- Root Protection Area
- Tree Protection Barrier to BS5837:2012
- Existing retaining wall to be used for tree protection
- Suggested site compound
- Suggested area for car parking
- Site access
- Surveyed area
- 00 Tree/Tree Group under TPO
- # Requiring pruning works - crown lift.

The original of this drawing was produced in colour - a monochrome copy should not be relied upon

N

Project: Larchwood Avenue, Bedhampton, Havant	
Drawing: Tree Protection Plan	
Client: Savills - Planning	
Drawing Number: C122638-03-01	Revision: 00
Scale @ A3: 1:500	Date: May 2016
Approved By: BJ	Drawn By: AM

MIDDLEMARCH ENVIRONMENTAL
Triumph House, Birmingham Road, Allesley, Coventry CV5 9AZ
T:01676 525880 F:01676 521400
E:admin@middlemarch-environmental.com

This map is reproduced from the Ordnance Survey material with the permission of Ordnance Survey on behalf of The Controller of Her Majesty's Stationary Office. © Crown copyright. Unauthorised reproduction infringes Crown copyright and may lead to prosecution of civil proceedings.
Licence Number: 100040519
Drawing based on proposed plan "KFC Bedhampton -master feasibility 03-02-16.dwg"supplied by the client

REFERENCES AND BIBLIOGRAPHY

Arboricultural Advisory Information Services (AAIS) Practice Note 12 (2007) Through Trees to Development.

British Standards Institute. (2012). British Standard 5837:2012, Trees in relation to design, demolition and construction – Recommendations. British Standards Institute, London.

British Standards Institute. (2010). British Standard 3998:2010, Recommendations for Tree Work. British Standards Institute, London.

Johnson & More (2004) Tree Guide, Collins, London

Middlemarch Environmental Ltd. (2016). Report Number RT-MME-122638-01. Larchwood Avenue, Bedhampton, Havant – Preliminary Ecological Appraisal.

Middlemarch Environmental Ltd. (2016). Report Number RT-MME-122638-02. Larchwood Avenue, Bedhampton, Havant – Arboricultural Survey and Impact Assessment.

NJUG Volume 4 (2007) Guidelines for the Planning, Installation and Maintenance of Utility Services in Proximity to Trees.

APPENDICES

APPENDIX 1: Headings for Protective Barrier Notices and Example Protection Sign

APPENDIX 2: Details of Protective Barrier

APPENDIX 1

Headings for Protective Barrier Notices

Root Protection Area (RPA) Model Notice

DON'T excavate within this area
DON'T use any form of mechanical plant with this area
DON'T store materials, plant or equipment within this area
DON'T move plant or vehicles within this area

DO contact the Local Authority Arboricultural Officer or owner of the tree if excavation within this area is unavoidable
DO protect any exposed roots uncovered within this area with dry sacking
DO backfill with a suitable inert granular and top soil material mix as soon as possible on completion of work

ANY WORK in this area requires a permit from the Local Authority Arboricultural Officer

PROTECTIVE FENCING. THIS FENCING MUST BE MAINTAINED IN ACCORDANCE WITH THE APPROVED PLANS AND DRAWINGS FOR THIS DEVELOPMENT.

TREE PROTECTION AREA

KEEP OUT !

(TOWN & COUNTRY PLANNING ACT 1990)

TREES ENCLOSED BY THIS FENCE ARE PROTECTED BY PLANNING CONDITIONS AND/OR ARE THE SUBJECTS OF A TREE PRESERVATION ORDER.

CONTRAVENTION OF A TREE PRESERVATION ORDER MAY LEAD TO CRIMINAL PROSECUTION

ANY INCURSION INTO THE PROTECTED AREA MUST BE WITH THE WRITTEN PERMISSION OF THE LOCAL PLANNING AUTHORITY

APPENDIX 2

Details of Protective Barrier

Figure 2 **Default specification for protective barrier**

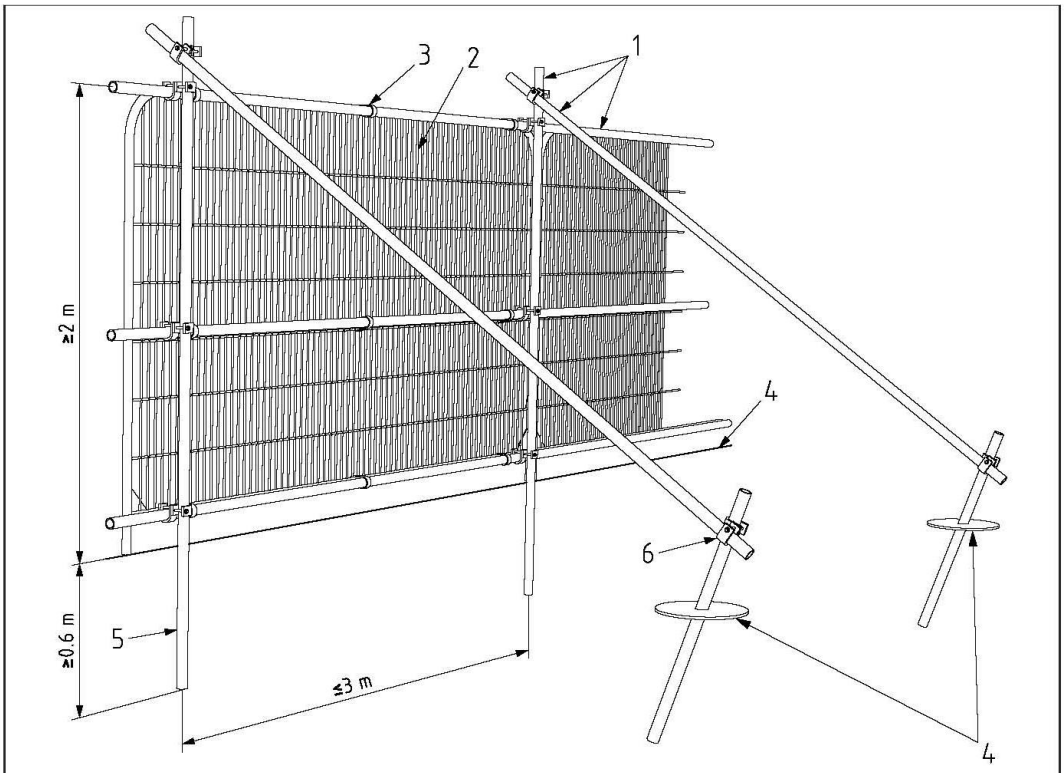

Key

1 Standard scaffold poles

2 Heavy gauge 2 m tall galvanized tube and welded mesh infill panels

3 Panels secured to uprights and cross-members with wire ties

4 Ground level

5 Uprights driven into the ground until secure (minimum depth 0.6 m)

6 Standard scaffold clamps