Skate Catalogue 2008

CONCRETE®
SKATE PARKS | RUDOLPH

S

General Information	4
Modular Elements	12
Grind Elements	36
Single Ramps	60
Funboxes	72
Run-up and Boundary Elements	96
Miniramps and Halfpipes	112
Pools / Mellows / Volcanoes	118
Accessories	160

Skate Park Planning

The most essential thing: the right contact

By now Concrete® Skateparks are able to look back on many years of experience in the field of skate and BMX parks. Experience in cooperation with the target groups, the awarded engineering offices, the city councils and the municipalities shows that the creation of a fantastic and, and as a result also highly frequented, skate park is hardly possible without communication with everyone involved. Not every town planner or architect has the knowledge of what the local roller sportsmen would like to have for their recreational activities. This is easy to find out as most of the time these roller sportsmen have quite a precise idea about how »their« new park will look, and would also like to take part in the planning process of the facility in a very committed way. This contact can be made by simply asking someone from a local skate shop or at a skateboard club. As such errors can be avoided from the very beginning.

The first step, however, is consultation by Concrete®. Technical details will be discussed in the initial planning phase already so that the cost structure will be maintained throughout the project. The next step is to unite all people involved so that a tailor-made skate park can be designed. Of course also the construction company that is executing the project is contributing its part to the success of the skate park to be created. As they usually are not all too familiar with this kind of product, however, the construction company shall be introduced to this responsibility. Therefore communication is just as strongly emphasized during the implementation stage of the project, as it is during the preliminary planning stage.

Material: Concrete

For outdoor skate elements concrete offers excellent material characteristics. All elements are double-reinforced and are casted in high-class concrete C40/50 XC4-XF3. The skating surfaces are concreted »overhead« on special moulding matrices. For this reason the surface areas show very high stability. This guarantees a life of several decades. Contrary to other materials also the driving surfaces have a very long life and do not have to be exchanged. This reduces the day-to-day maintenance costs considerably. Concrete is the right choice also with regard to safety, as injuries by for example »projecting screws« etc. can be ruled out.

Furthermore concrete offers an increased protection against vandalism. Even in the case of severe mechanical damage later repairs are possible with a special repair mortar. Furthermore skating elements of concrete silence any running noise due to their solid construction which even the neighbourhood does not mind to hear.
Respective sound expertises are available on demand.

(!) Alterations as per individual requirements are always possible.

Installation of elements with metal transition sheets

A

On spots with an already existing driving surface, particularly smooth transitions can be created between driving surface and skate element by stainless steel sheet metals. These stainless steel sheet metals are already firmly anchored with the respective element upon delivery and they also have a sufficient projection.

The skate element is put on a mortar bed with a thickness of approx. 1 cm. The metal transition sheet directed to the bottom thus is under permanent tension towards the driving surface, and is well set. This creates transition from the skate element to the driving surface which offers both, continuous fun and safety for skating. Owing to their high dead weight they are practically unmovable when in full load.

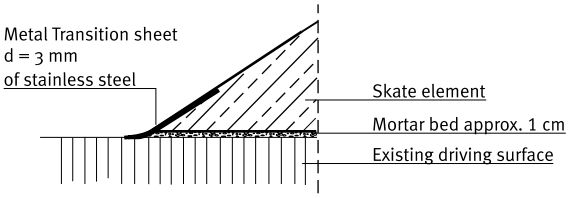

A Coating

As functionality and quality are our top priorities we only supply elements finished with a coating. This coating consists of artificial resin priming and of a double polyurethane coating. Inevitable joints will be hard jointed on the running surface during the installation job on site with a high-class jointing material in order not to disturb the excellent rolling characteristics of the elements. To ensure a uniform appearance, coating is applied at the end of the installation job. The colouring of the coating is completely up to you (as per colour control chart). The driving surfaces of the elements should be kept in grey, however. In case of damage or wear and tear it is easy to replace the coating on site by applying a further layer of coloured coating at a reasonable cost.

Fine capillary chinks in the area of a joint are for constructional reasons and cannot be avoided. However, these cracks only appear in a very specific area (see figure) and are irrelevant for skating.

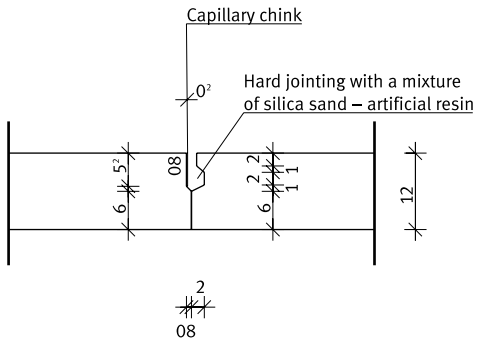

Installation of elements with concrete flat

B

Joining the running surface to the element to get a smooth transition from the skate element to the flat is one of the most important details when building a skate park. As the skaters have to rely on this, no edge may arise during these joining works because such edges will produce a risk of injury later on. From a skater's point of view this is the best solution and therefore should be implement in all new projects.

A Edge protection

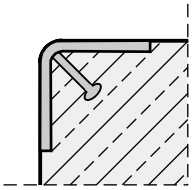

Edge protection firmly anchored with the skate elements without screwing.
Available in galvanized execution.

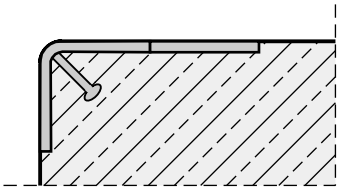

Edge protection also available with an 8 cm guard plate for BMX bikes against surcharge.

B Coping

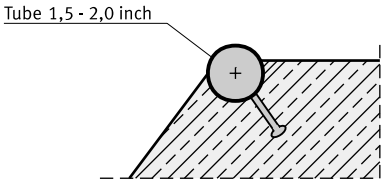

Coping firmly anchored to the element without screwing.
Available in galvanized execution.

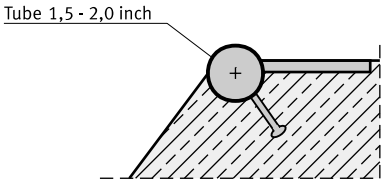

Coping also available with an 8 cm guard plate for BMX bikes against surcharge.

C Square rail

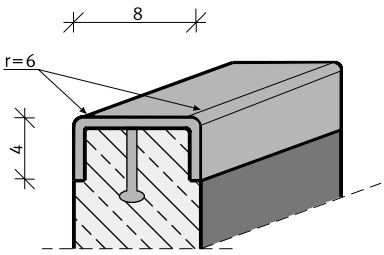

U-profile 8 cm wide; firmly anchored with the skate element.
Available in galvanized execution.

Square rail as handrail D

Handrail of solid U-shaped edge profile with 8 cm wide grinding surface.

Available in galvanized execution.

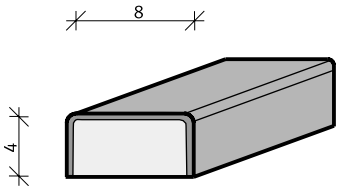

Round rail as handrail E

Handrail 1.5" or 2" thick of solid circular tube.

Available in galvanized execution.

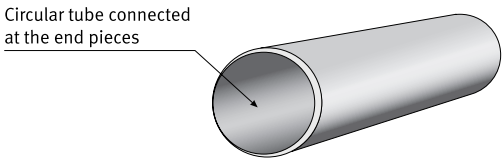

Rail fixation F

Rail firmly casted in.

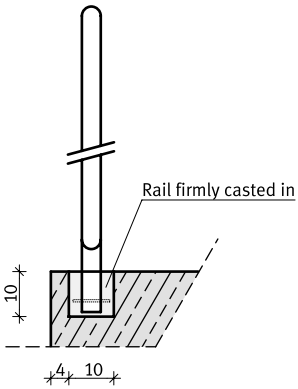

A Safety requirements

Copings and edge protections are supplied in galvanized execution as the sliding characteristics are considerably better than with stainless steel. However, pointcasted spots of rust are unavoidable. The end pieces of the copings are closed.

In general, the regulations of EN 14974:2006 have to be met for all public skating facilities which are not supervised. The skating facilities must be specially separated from other facilities. Safety areas and the required minimum distance between the elements must be kept. The condition of the running surfaces and of the safety areas have to comply with EN 14974:2006. Entrances of public skating facilities must be equipped with information signs with the following minimum information (for signs see accessories on page 162):

Dear Skater,
Due to safety reasons and in the interest of all users the following should be taken into account:
– Driving with bikes prohibited. (exception: BMX bikes according to DIN 79105)
– Facility may only be used with suitable safety clothing (protection for head, knees and elbows)
– The entire skating facility is a safety area and thus counts as marked. It is no area for lingering and must be kept free of obstacles.
– Utilization on one's own risk.
– Keep facility clean.
– Take care of other users.

From a falling height of 100 cm suitable falling protections shall be installed.

Should several elements be required as a course our design department is pleased to provide you with sketches adapted to both, your budget and the geometry of your park. A larger course may also be carried out in several steps. However, the basis for such a project is a far-sighted planning. Make use of this service!

Remark B

The elements shown in the price list are available in the most diverse combinations. If required we also produce tailor-made elements according to the individual requests of our customers. All elements shown herein comply with the current EN 14974:2006 and are TÜV and GS tested.

Development and design of elements: M. Fussenegger, V. Kaczmarek, T. Sideris, W. Heuermann and DSGN-concepts
In cooperation with: Eva Rudolph, Freelance Architect, 88161 Lindenberg / Germany, Auf der Schanz 3

Imprint:
Concrete®-Sportanlagen GmbH
Ellhofen / Steinbißstraße 15 | 88171 Weiler-Simmerberg / Germany
Fon: +49 (0) 8384 / 821090 | Fax: +49 (0) 8384 / 821091
www.concrete-sportanlagen.de | info@concrete-sportanlagen.de
Managing Director: Hermann Rudolph
District court: Kempten, HRB (register of companies) 7398
VAT ID No. DE 212298796

Design + Setting:
NONNENBROICH | ZIEGLER
Waldseer Str. 2 | 88250 Weingarten / Germany
Fon: +49 (0) 751 / 5 6198-0 | Fax: +49 (0) 751 / 5 6198-20
www.nzwg.de | info@nzwg.de

i

Link edge corner _ This innovation allows for the first time a combination of ramps and banks. Therefore possibilities for combinations with our individual elements are almost endless. What makes it unique is that bank corners with straight access and ramps with bended transition can now be harmoniously closed. Wherever a gap was created in the past, the link-edge enables skating on a skate element closed on all sides. As a result skating on such elements is not only more versatile and much more interesting now, but also much safer.

Copings and edge profiles _ Only a proper installation of copings and edge profiles ensures a lot of fun when skating. The copings of all of our elements are closed on the sides and are firmly anchored with vandalism-proof bolts. Our elements are TÜV-tested and have been awarded the GS label. They also comply with the current requirements of EN 14974:2006. It is a matter of course that our company is working according to the standards stipulated in ISO 9001. A permanent quality control ensures that only correct products will leave our premises. Apart from the TÜV expertises also a sound expertise is available which can be presented on request free of charge.

Owing to the **modular system** you can combine almost all elements of our product range. Design your own funbox or combination. We expanded our range of products for a multitude of connection elements. For pools, snakeruns, banks and bowls in particular different elements can now be linked. That way the fringe area of many skate parks may be extended by wave-like and snakerun-like skating areas. Whether a bank turns into a ramp or whether two heights are linked is up to you. Other innovations are the external edges for hips and the internal edges for scarvings.

A Table

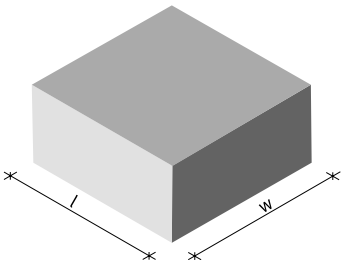

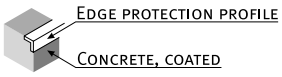

Detail: A

Product Code	Length	Width	Height
T0130	120 cm	120 cm	30 cm
T0160	120 cm	120 cm	60 cm
T0180	120 cm	120 cm	80 cm
T0198	120 cm	120 cm	98 cm
T0230	120 cm	240 cm	30 cm
T0260	120 cm	240 cm	60 cm
T0280	120 cm	240 cm	80 cm
T0298	120 cm	240 cm	98 cm
T2120	120 cm	240 cm	120 cm
T2150	120 cm	240 cm	150 cm
T3230	240 cm	240 cm	30 cm
T3260	240 cm	240 cm	60 cm
T3280	240 cm	240 cm	80 cm
T3298	240 cm	240 cm	98 cm
T3120	240 cm	240 cm	120 cm
T3150	240 cm	240 cm	150 cm
T4230	120 cm	360 cm	30 cm
T4260	120 cm	360 cm	60 cm
T4280	120 cm	360 cm	80 cm
T4298	120 cm	360 cm	98 cm
T4120	120 cm	360 cm	120 cm
T4150	120 cm	360 cm	150 cm

As a stand-alone element the table is closed on all sides so that it can be kept clean in an ideal way.
If required, the table is also available with edge protection, galvanized.

Stairs B

Prod. Cde.	Length	Width	Height	Steps	Step height/depth
TR060	165 cm	120 cm	60 cm	3	20 cm / 55 cm
TR080	220 cm	120 cm	80 cm	4	20 cm / 55 cm
TR098	275 cm	120 cm	98 cm	5	19,6 cm / 54 cm
TR120	330 cm	120 cm	120 cm	6	20 cm / 55 cm
TR150	385 cm	120 cm	150 cm	7	21,1 cm / 58 cm
TR260	165 cm	240 cm	60 cm	3	20 cm / 55 cm
TR280	220 cm	240 cm	80 cm	4	20 cm / 55 cm
TR298	275 cm	240 cm	98 cm	5	19,6 cm / 54 cm
TR220	330 cm	240 cm	120 cm	6	20 cm / 55 cm
TR250	385 cm	240 cm	150 cm	7	21,1 cm / 58 cm
TR360	165 cm	360 cm	60 cm	3	20 cm / 55 cm
TR380	220 cm	360 cm	80 cm	4	20 cm / 55 cm
TR398	275 cm	360 cm	98 cm	5	19,6 cm / 54 cm
TR320	330 cm	360 cm	120 cm	6	20 cm / 55 cm
TR350	385 cm	360 cm	150 cm	7	21,1 cm / 58 cm

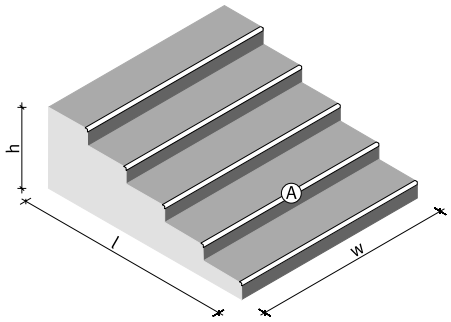

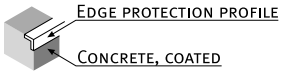

Detail: A

Minimum widths depend on the constructional height and are to be met according to EN 14974:2006.
Stairs are only admissible in connection with the table.
Stairs are also available with edge protection, galvanized.

A Ramps r = 280 cm

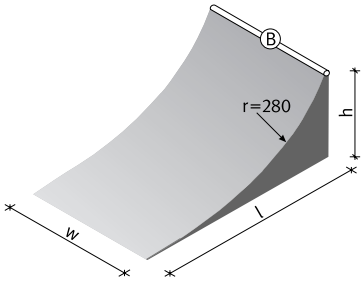

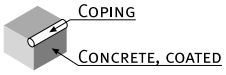

Detail: B

Product Code	Length	Width	Height
R1160	182 cm	120 cm	60 cm
R1180	205 cm	120 cm	80 cm
R1198	221 cm	120 cm	98 cm
R1260	182 cm	240 cm	60 cm
R1280	205 cm	240 cm	80 cm
R1298	221 cm	240 cm	98 cm
R1120	238 cm	240 cm	120 cm
R1150	255 cm	240 cm	150 cm
R3260	182 cm	360 cm	60 cm
R3280	205 cm	360 cm	80 cm
R3298	221 cm	360 cm	98 cm
R3120	238 cm	360 cm	120 cm
R3150	255 cm	360 cm	150 cm

All given dimensions in standard execution. Correspondingly larger if equipped with a metal transition sheet.

As a stand-alone element the ramp is closed on all sides so that it can be kept clean in an ideal way.
Minimum widths depend on the constructional height and are to be met according to EN 14974:2006.
Stand-alone ramps with an element height of › 100 cm are only admissible in connection with a table and a falling protection.

Ramps r = 220 cm

B

Product Code	Length	Width	Height
R2160	160 cm	120 cm	60 cm
R2180	178 cm	120 cm	80 cm
R2198	192 cm	120 cm	98 cm
R2260	160 cm	240 cm	60 cm
R2280	178 cm	240 cm	80 cm
R2298	192 cm	240 cm	98 cm
R2120	205 cm	240 cm	120 cm
R2150	217 cm	240 cm	150 cm
R4260	160 cm	360 cm	60 cm
R4280	178 cm	360 cm	80 cm
R4298	192 cm	360 cm	98 cm
R4120	205 cm	360 cm	120 cm
R4150	217 cm	360 cm	150 cm

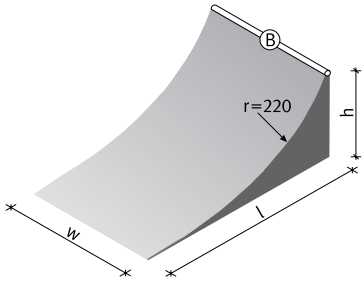

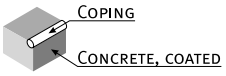

Detail: B

All given dimensions in standard execution. Correspondingly larger if equipped with a metal transition sheet.

As a stand-alone element the ramp is closed on all sides so that it can be kept clean in an ideal way.
Minimum widths depend on the constructional height and are to be met according to EN 14974:2006.
Stand-alone ramps with an element height of › 100 cm are only admissible in connection with a table and a falling protection.

A Transition hip for ramps

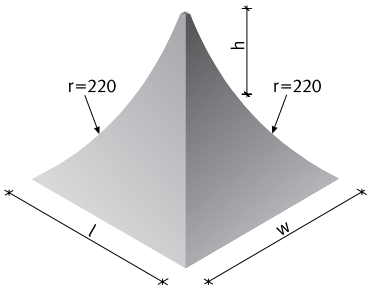

Product Code	Length	Width	Height
PRT60	160 cm	156 cm	60 cm
PRT80	178 cm	175 cm	80 cm
PRT98	192 cm	188 cm	98 cm
PRT12	205 cm	201 cm	120 cm
PRT15	217 cm	213 cm	150 cm

All given dimensions in standard execution. Correspondingly larger if equipped with a metal transition sheet.

B Transition corner for ramps

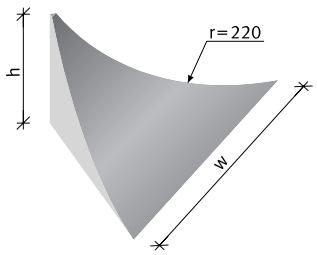

Product Code	Length	Width	Height
TC260	160 cm	226 cm	60 cm
TC280	178 cm	252 cm	80 cm
TC298	192 cm	271 cm	98 cm
TC212	205 cm	289 cm	120 cm
TC215	217 cm	306 cm	150 cm

All given dimensions in standard execution. Correspondingly larger if equipped with a metal transition sheet.

Corner 15° C

Product Code	Length	Width	Height
BC230	117 cm	165 cm	30 cm
BC260	229 cm	324 cm	60 cm
BC280	304 cm	430 cm	80 cm

All given dimensions in standard execution. Correspondingly larger if equipped with a metal transition sheet.

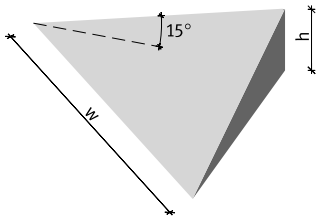

Corner 20° D

Product Code	Length	Width	Height
BC160	170 cm	240 cm	60 cm
BC180	225 cm	318 cm	80 cm
BC198	274 cm	388 cm	98 cm
BC120	335 cm	473 cm	120 cm
BC150	412 cm	582 cm	150 cm

All given dimensions in standard execution. Correspondingly larger if equipped with a metal transition sheet.

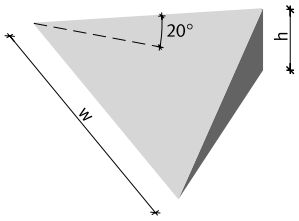

A Bank 15°

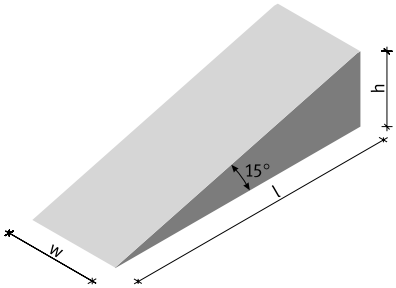

Product Code	Length	Width	Height
B3130	117 cm	120 cm	30 cm
B3160	229 cm	120 cm	60 cm
B3180	304 cm	120 cm	80 cm
B3198	371 cm	120 cm	98 cm
B3230	117 cm	240 cm	30 cm
B3260	229 cm	240 cm	60 cm
B3280	304 cm	240 cm	80 cm
B3298	371 cm	240 cm	98 cm
B3120	453 cm	240 cm	120 cm
B3150	557 cm	240 cm	150 cm
B5230	117 cm	360 cm	30 cm
B5260	229 cm	360 cm	60 cm
B5280	304 cm	360 cm	80 cm
B5298	371 cm	360 cm	98 cm
B5120	453 cm	360 cm	120 cm
B5150	557 cm	360 cm	150 cm

All given dimensions in standard execution. Correspondingly larger if equipped with a metal transition sheet.

As a stand-alone element the bank is closed on all sides so that it can be kept clean in an ideal way.
Minimum widths depend on the constructional height and are to be met according to EN 14974:2006.
Stand-alone banks with an element height of › 100 cm are only admissible in connection with a table and a falling protection.
If required, bank also available with edge protection, galvanized.

Bank 20° B

Product Code	Length	Width	Height
B0160	170 cm	120 cm	60 cm
B0180	225 cm	120 cm	80 cm
B0198	274 cm	120 cm	98 cm
B0260	170 cm	240 cm	60 cm
B0280	225 cm	240 cm	80 cm
B0298	274 cm	240 cm	98 cm
B2120	335 cm	240 cm	120 cm
B2150	412 cm	240 cm	150 cm
B4260	170 cm	360 cm	60 cm
B4280	225 cm	360 cm	80 cm
B4298	274 cm	360 cm	98 cm
B4120	335 cm	360 cm	120 cm
B4150	412 cm	360 cm	150 cm

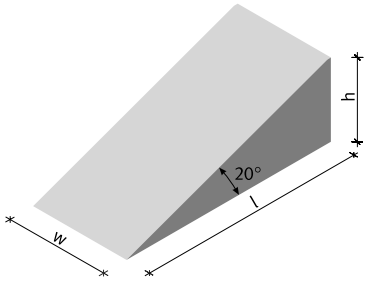

All given dimensions in standard execution. Correspondingly larger if equipped with a metal transition sheet.

As a stand-alone element the bank is closed on all sides so that it can be kept clean in an ideal way.
Minimum widths depend on the constructional height and are to be met according to EN 14974:2006.
Stand-alone banks with an element height of › 100 cm are only admissible in connection with a table and a falling protection.
If required, bank also available with edge protection, galvanized.

A New: Kingsize bank 35° as individual element

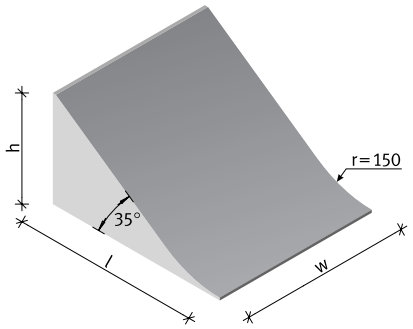

Product Code	Length	Width	Height
BK102	193 cm	240 cm	98 cm
BK124	224 cm	240 cm	120 cm
BK152	264 cm	240 cm	150 cm

All given dimensions in standard execution. Correspondingly larger if equipped with a metal transition sheet.

As a stand-alone element the bank is closed on all sides so that it can be kept clean in an ideal way.
Minimum widths depend on the constructional height and are to be met according to EN 14974:2006.
Stand-alone banks with an element height of › 100 cm are only admissible in connection with a table and a falling protection.
If required, banks are also available with edge protection, galvanized.

B New: Kingsize bank 45° as individual element

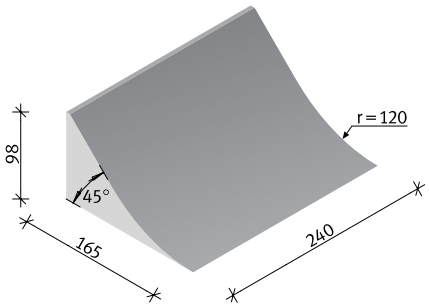

Product Code	Length	Width	Height
BK098	165 cm	240 cm	98 cm

All given dimensions in standard execution. Correspondingly larger if equipped with a metal transition sheet.

Speed ramp

C

Product Code	Length	Width	Height
S0160	171 cm	120 cm	60 cm
S0180	200 cm	120 cm	80 cm
S0198	226 cm	120 cm	98 cm
S0260	171 cm	240 cm	60 cm
S0280	200 cm	240 cm	80 cm
S0298	226 cm	240 cm	98 cm
S2120	257 cm	240 cm	120 cm
S2150	297 cm	240 cm	150 cm
S3260	171 cm	360 cm	60 cm
S3280	200 cm	360 cm	80 cm
S3298	226 cm	360 cm	98 cm
S3120	257 cm	360 cm	120 cm
S3150	297 cm	360 cm	150 cm

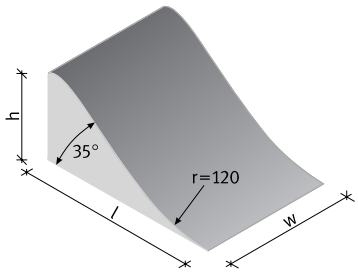

All given dimensions in standard execution. Correspondingly larger if equipped with a metal transition sheet.

As a stand-alone element the speed ramp is closed on all sides so that it can be kept clean in an ideal way.
Minimum widths depend on the constructional height and are to be met according to EN 14974:2006.
Stand-alone ramps with an element height of › 100 cm are only admissible in connection with a table and a falling protection.

A Link edge for ramp and bank 15°

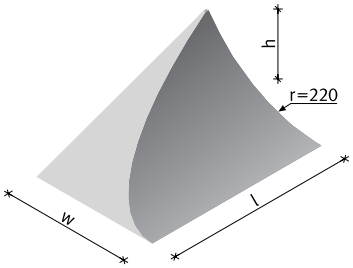

Product Code	Length	Width	Height
LE060	229 cm	160 cm	60 cm
LE298	371 cm	192 cm	98 cm

All given dimensions in standard execution. Correspondingly larger if equipped with a metal transition sheet.

Corner as connection element between ramps and banks.

B Link edge for ramp and bank 20°

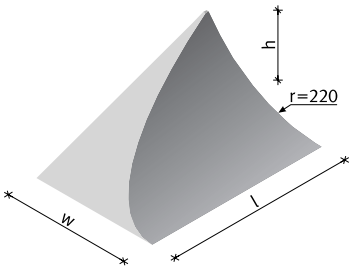

Product Code	Length	Width	Height
LE080	225 cm	178 cm	80 cm
LE098	274 cm	192 cm	98 cm
LE012	335 cm	205 cm	120 cm
LE015	412 cm	217 cm	150 cm

All given dimensions in standard execution. Correspondingly larger if equipped with a metal transition sheet.

Corner as connection element between ramps and banks.

New: Link edge for kingsize bank individual element 35°/20° C

Product Code	Length	Width	Height
LE398	274 cm	192 cm	98 cm
LE312	335 cm	224 cm	120 cm
LE315	412 cm	264 cm	148 cm

All given dimensions in standard execution. Correspondingly larger if equipped with a metal transition sheet.

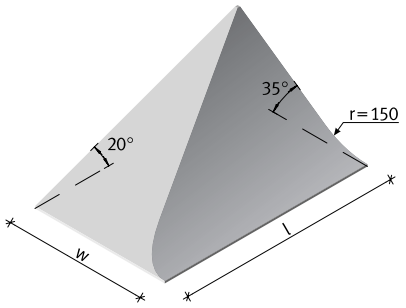

New: Link edge 45° D

Product Code	Length	Width	Height
LE180	225 cm	220 cm	80 cm
LE198	274 cm	260 cm	98 cm
LE112	335 cm	311 cm	120 cm
LE150	412 cm	380 cm	150 cm

All given dimensions in standard execution. Correspondingly larger if equipped with a metal transition sheet.

Corner as connection element between ramps and banks.

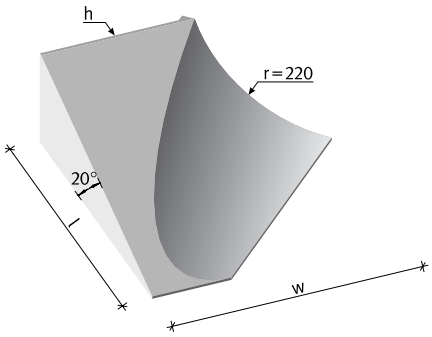

A New: Round corner 45° for banks 15°

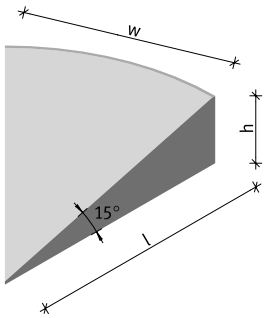

Product Code	Length	Width	Height
RC060	229 cm	175 cm	60 cm
RC080	304 cm	233 cm	80 cm
RC098	371 cm	284 cm	98 cm

Only available in standard execution.

B New: Round corner 45° for banks 20°

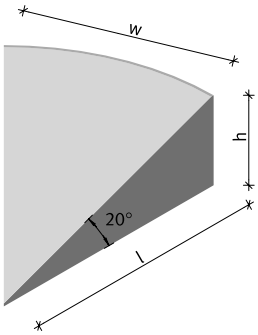

Product Code	Length	Width	Height
RC280	225 cm	172 cm	80 cm
RC298	274 cm	210 cm	98 cm
RC212	335 cm	256 cm	120 cm
RC215	412 cm	315 cm	150 cm

Only available in standard execution.

New: Round corner 90° for banks 15° C

Product Code	Length	Width	Height
RC160	229 cm	229 cm	60 cm
RC180	304 cm	304 cm	80 cm
RC198	371 cm	371 cm	98 cm

Only available in standard execution.

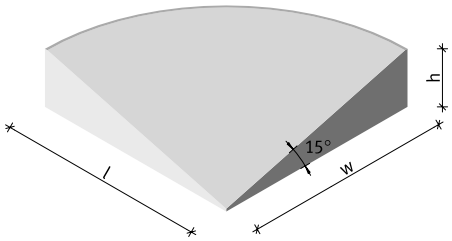

New: Round corner 90° for banks 20° D

Product Code	Length	Width	Height
RC380	225 cm	225 cm	80 cm
RC398	274 cm	274 cm	98 cm
RC312	335 cm	335 cm	120 cm
RC315	412 cm	412 cm	150 cm

Only available in standard execution.

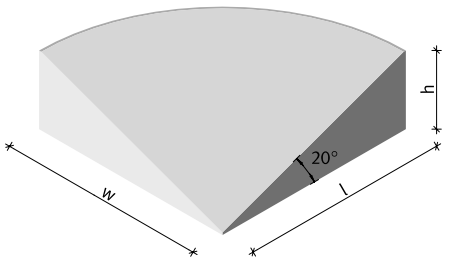

A Pyramid hip 90°/15°

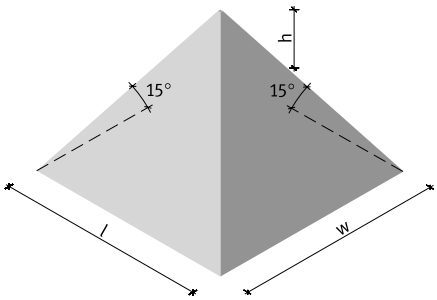

Product Code	Length	Width	Height
PC260	229 cm	229 cm	60 cm
PC280	304 cm	304 cm	80 cm
PC298	371 cm	371 cm	98 cm

All given dimensions in standard execution.
Correspondingly larger if equipped with a metal transition sheet.

B Pyramid hip 90°/20°

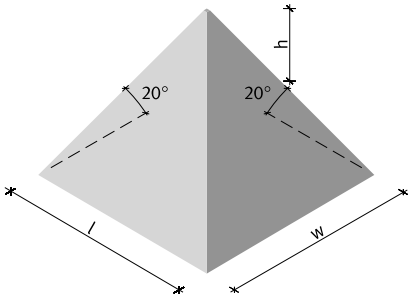

Product Code	Length	Width	Height
PC080	225 cm	225 cm	80 cm
PC098	274 cm	274 cm	98 cm
PC120	335 cm	335 cm	120 cm
PC150	412 cm	412 cm	150 cm

All given dimensions in standard execution.
Correspondingly larger if equipped with a metal transition sheet.

New: Pyramid hip 45°/15° C

Product Code	Length	Width	Height
PH060	229 cm	95 cm	60 cm
PH080	304 cm	126 cm	80 cm
PH098	371 cm	154 cm	98 cm

All given dimensions in standard execution.
Correspondingly larger if equipped with a metal transition sheet.

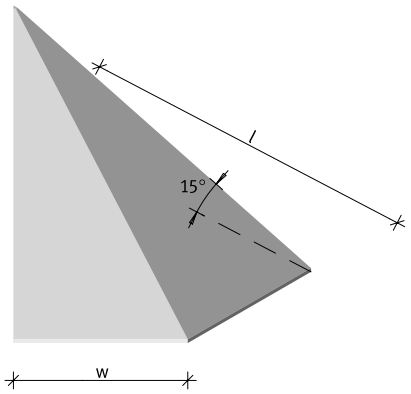

New: Pyramid hip 45°/20° D

Product Code	Length	Width	Height
PH180	219 cm	93 cm	80 cm
PH198	274 cm	114 cm	98 cm
PH120	335 cm	139 cm	120 cm
PH150	412 cm	171 cm	150 cm

All given dimensions in standard execution.
Correspondingly larger if equipped with a metal transition sheet.

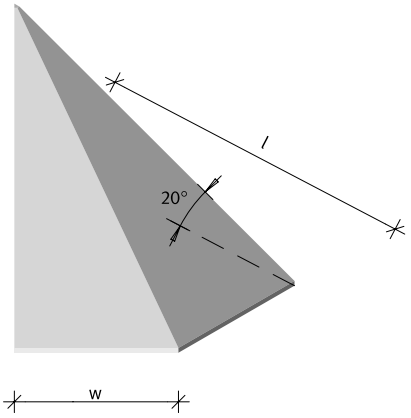

A New: Round hip 45° for banks 15°

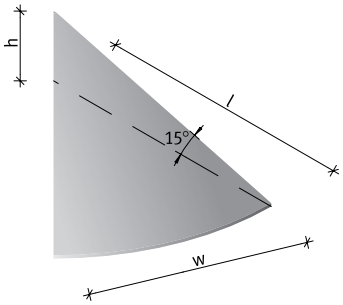

Product Code	Length	Width	Height
RH060	229 cm	175 cm	60 cm
RH080	304 cm	233 cm	80 cm
RH098	371 cm	284 cm	98 cm

Only available in standard execution.

B New: Round hip 45° for banks 20°

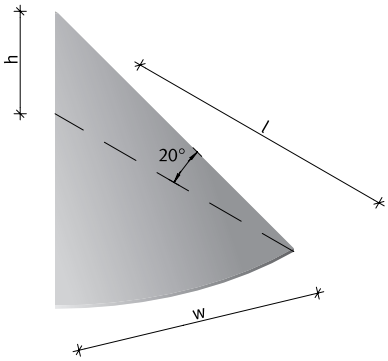

Product Code	Length	Width	Height
RH280	225 cm	172 cm	80 cm
RH298	274 cm	210 cm	98 cm
RH212	335 cm	256 cm	120 cm
RH215	412 cm	315 cm	150 cm

Only available in standard execution.

New: Round hip 90° for banks 15° C

Product Code	Length	Width	Height
RH160	229 cm	229 cm	60 cm
RH180	304 cm	304 cm	80 cm
RH198	371 cm	371 cm	98 cm

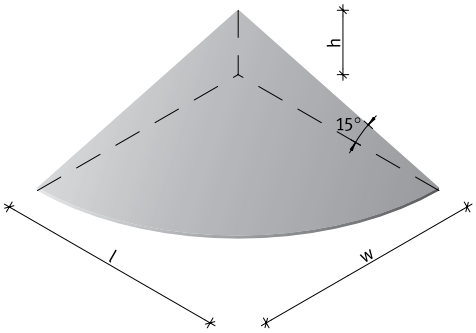

New: Round hip 90° for banks 20° D

Product Code	Length	Width	Height
RH380	225 cm	225 cm	80 cm
RH398	274 cm	274 cm	98 cm
RH312	335 cm	335 cm	120 cm
RH315	412 cm	412 cm	150 cm

Only available in standard execution.

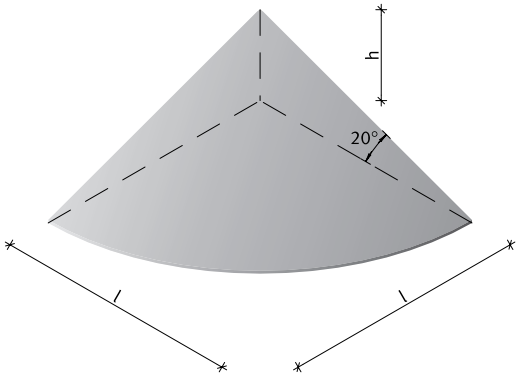

A London Gap 15°

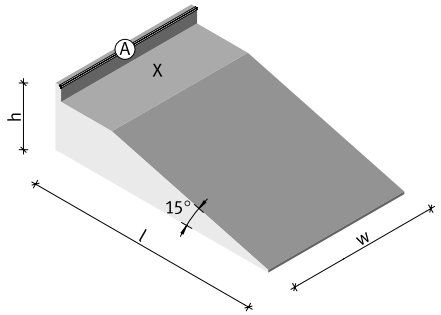

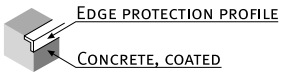

Detail: A

Product Code	Length	Width	Height
LGP22	234 cm	240 cm	40 cm / 60 cm
LGP21	376 cm	240 cm	70 cm / 98 cm

All given dimensions in standard execution.
Correspondingly larger if equipped with a metal transition sheet.

B London Gap 20°

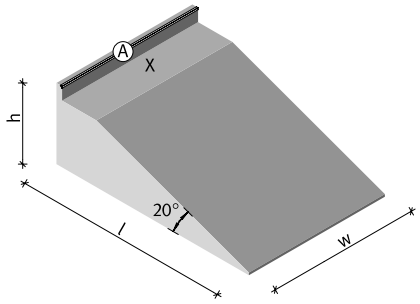

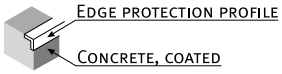

Detail: A

Product Code	Length	Width	Height
LGP80	230 cm	240 cm	60 cm / 80 cm
LGP98	280 cm	240 cm	70 cm / 98 cm
LGP12	340 cm	240 cm	98 cm / 120 cm
LGP15	617 cm	240 cm	120 cm / 150 cm

All given dimensions in standard execution.
Correspondingly larger if equipped with a metal transition sheet.

New: London Gap with stairs 15° C

Product Code	Length	Width	Height 1/2
LG160	261 cm	240 cm	40 cm / 60 cm
LG198	418 cm	240 cm	70 cm / 98 cm

All given dimensions in standard execution.
Correspondingly larger if equipped with a metal transition sheet.

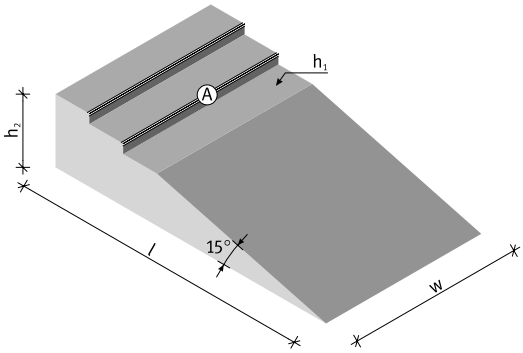

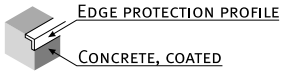

Detail: A

New: London Gap with stairs 20° D

Product Code	Length	Width	Height 1/2
LG280	247 cm	240 cm	60 cm / 80 cm
LG298	308 cm	240 cm	70 cm / 98 cm
LG212	371 cm	240 cm	90 cm / 120 cm
LG215	459 cm	240 cm	110 cm / 148 cm

All given dimensions in standard execution.
Correspondingly larger if equipped with a metal transition sheet.

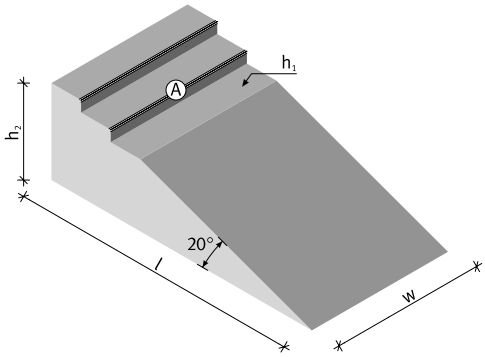

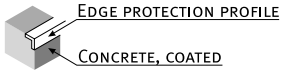

Detail: A

A New: Triple bank

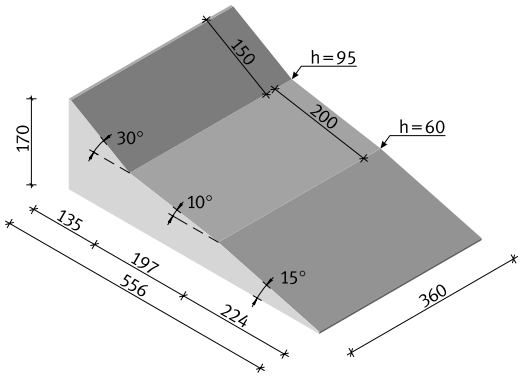

Product Code	Length	Width	Height
TRB01	556 cm	360 cm	60 cm / 95 cm / 170 cm

All given dimensions in standard execution.
Correspondingly larger if equipped with a metal transition sheet.

May only be installed together with a platform at the rear.

B New: Bank 45° with curb

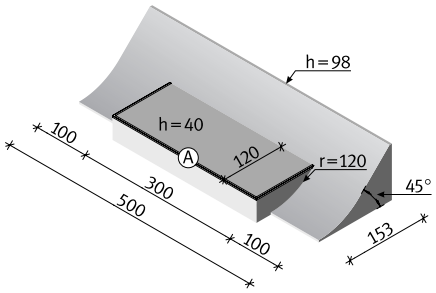

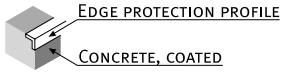

Detail: A

Product Code	Length	Width	Height
BC098	153 cm	500 cm	40 cm / 98 cm

All given dimensions in standard execution.
Correspondingly larger if equipped with a metal transition sheet.

May only be installed together with a platform at the rear.

New: Bank 45° with bank and hip

C

Product Code	Length	Width	Height
MMB98	540 cm	398 cm	60 cm / 98 cm

All given dimensions in standard execution.
Correspondingly larger if equipped with a metal transition sheet.

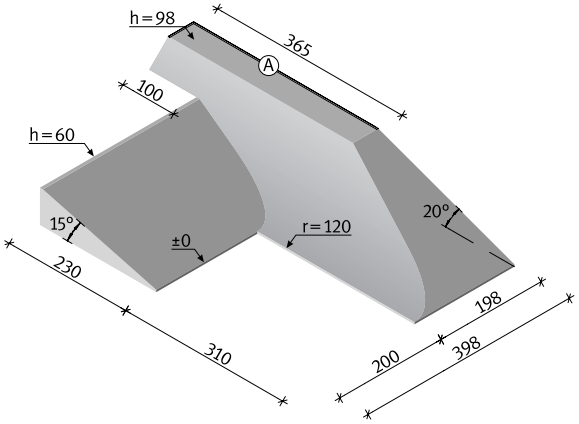

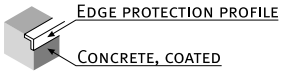

Detail: A

New: Bank 45° with stairs and hip

D

Product Code	Length	Width	Height
BMT98	635 cm	398 cm	60 cm / 98 cm

All given dimensions in standard execution.
Correspondingly larger if equipped with a metal transition sheet.

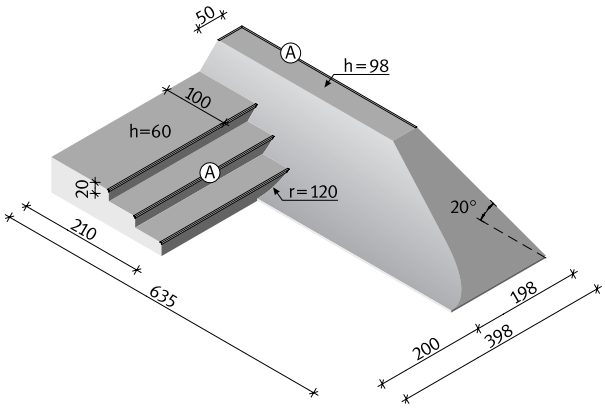

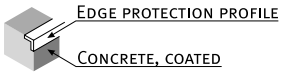

Detail: A

i

Grind_ Just as with sliding, the skater slides across an obstacle when grinding, however not with the wooden part of the board but with the axis instead. Various trick variations exist also for grinds.

Slide_ When sliding, the skater slides across an obstacle with his board. Sliding is possible with all parts of the board. Depending on which part is used, different types of slides can be produced, e.g. tail slide or board slide. The difference between sliding and grinding is that when sliding, the board only touches the obstacle but not the axis or similar.

(!) EN standard:
All stand-alone grinding elements shall have a safety distance of 2 m all around.

Rails, ledges, curbs and benches are regarded as **grind elements**. Initially these were constructional elements as they occur in cities and streets. Skaters are grinding and sliding along these edges, rods and tubes. That is something which skaters do not have to do without in their park. Grind elements may be incorporated into straight areas or inclinations. Just like handrails in the city, also these rails lead up and down the stairs, or are installed on banks. The heights and lengths of the rails and curbs depend on the skater's skills and the level of challenge they are seeking. Grinding edges are available with edge protections, coping or just in raw (i.e. concrete only) state.

A Rail as round rail

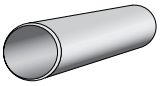

Execution:

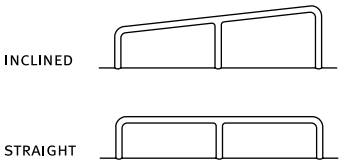

Product Code	Execution	Diameter	Height
HR001	straight	1,5 / 2 Inch	20 - 98 cm
HRS01	inclined	1,5 / 2 Inch	20 - 98 cm

Individual execution possible.

B Rail as square rail

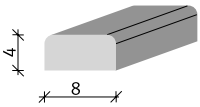

Execution:

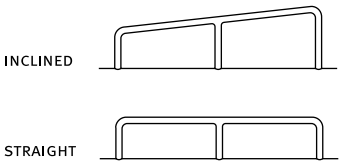

Product Code	Execution	Width	Height
SR001	straight	8 cm	20 - 98 cm
SRS01	inclined	8 cm	20 - 98 cm

Handrail with wide grinding area as square rail.
Individual execution possible.

C Hillslide

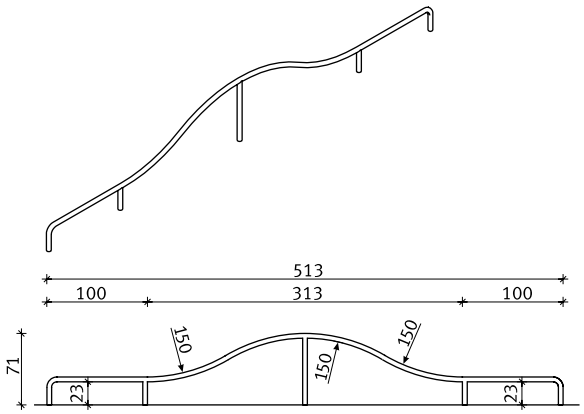

Product Code	Length	Diameter	Height
HS010	513 cm	1,5 / 2 Inch	71 cm

Handrail is available as galvanized single tube.
If required, also available as double handrail.

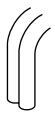

Kinkrail round rail **D**

Product Code	Length	Diameter	Height
KRR10	549 cm	1,5 / 2 Inch	30 - 40 cm

Handrail is available as galvanized single tube.
If required, also available as double handrail.

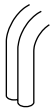

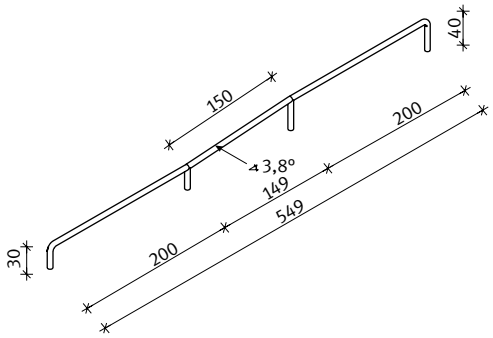

Kinkrail square rail **E**

Product Code	Length	Width	Height
KRS10	549 cm	8 cm	30 - 40 cm

Solid element as shown in drawing.

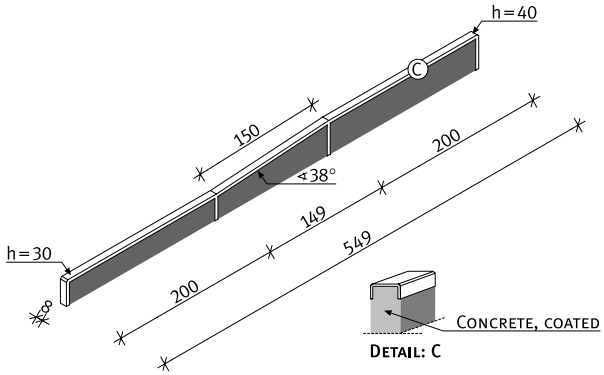

Parking block **F**

Product Code	Length	Width	Height
PAB01	100 - 300 cm	18 cm	13 cm

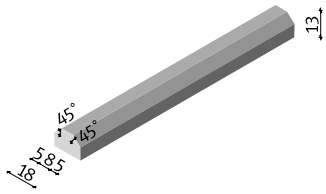

A Waxed ledge, round

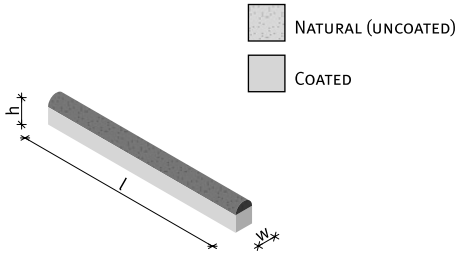

Product Code	Length	Width	Height
WLR01	400 cm	35 cm	35 cm
WLR02	400 cm	35 cm	50 cm

Grinding area without coating, waxed for real street feeling.
Element without edge protection.
Please note: Edges are subject to wear and tear.

B Waxed ledge, straight

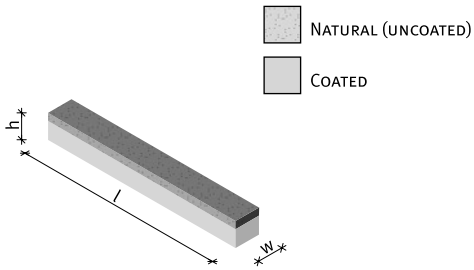

Product Code	Length	Width	Height
WLS01	400 cm	50 cm	30 cm
WLS02	400 cm	50 cm	40 cm

Grinding area without coating, waxed for real street feeling.
Element without edge protection.
Please note: Edges are subject to wear and tear.

C New: Barrier

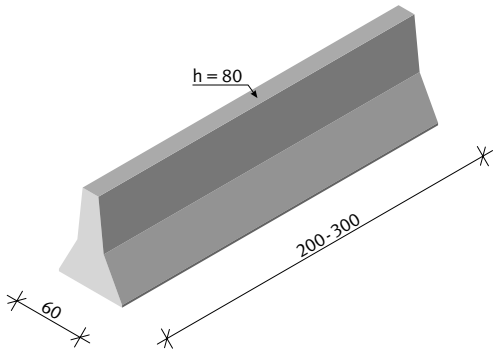

Product Code	Length	Width	Height
SB001	200 - 300 cm	60 cm	80 cm

Element without edge protection.
Please note: Edges are subject to wear and tear.

New: Bench D

Product Code	Length	Width	Height
BE300	300 cm	60 cm	40 cm

Can be used as a seat in skate parks.
Element is available with galvanized edge protection.

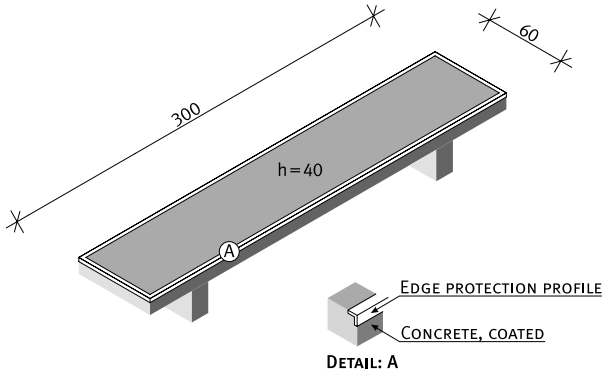

New: Straight ledge with rail E

Product Code	Length	Width	Height
SLR05	500 cm	80 cm	40 cm / 98 cm

Solid element as shown in drawing.

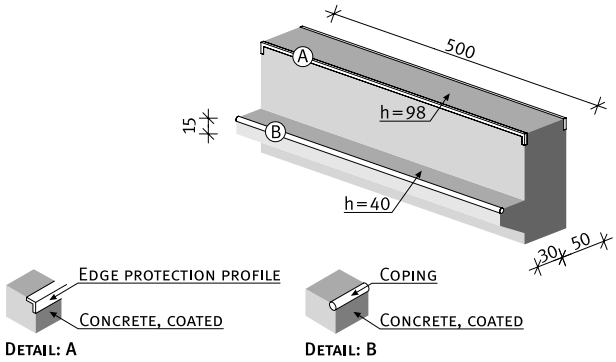

Squarerail F

Product Code	Length	Width	Height
SQ040	300 cm	40 cm	40 cm

Solid element as shown in drawing.

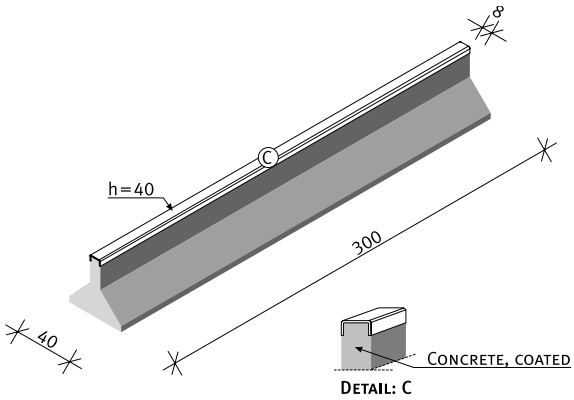

A Kink ledge 15°

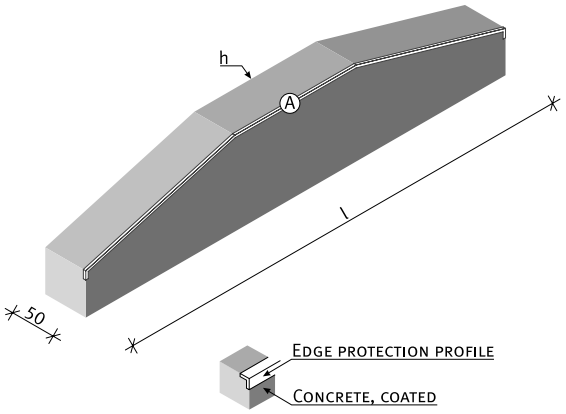

Detail: A

Product Code	Length	Width	Height
KL598	860 cm	50 cm	98 cm
KL512	994 cm	50 cm	120 cm
KL514	1160 cm	50 cm	140 cm
KL516	1368 cm	50 cm	160 cm
KL518	1368 cm	50 cm	180 cm

If required, ledges with edge protection on both sides.
Individual production possible.
For a table width of 240 cm.

B Kink ledge 20°

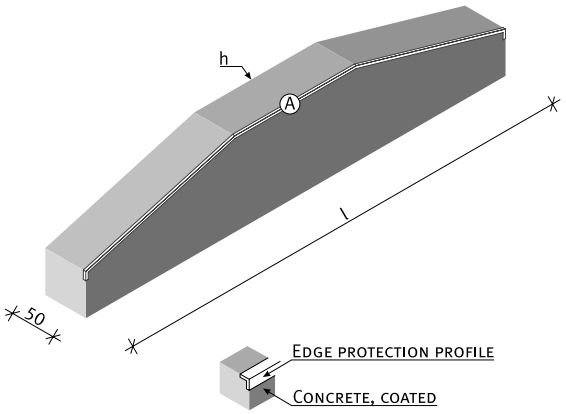

Detail: A

Product Code	Length	Width	Height
KL212	800 cm	50 cm	120 cm
KL214	930 cm	50 cm	140 cm
KL216	1070 cm	50 cm	160 cm
KL218	1070 cm	50 cm	180 cm

If required, ledges with edge protection on both sides.
Individual production possible.
For a table width of 240 cm.

Straight ledge C

Product Code	Width	Height
LG060	50 cm	60 cm
LG070	50 cm	70 cm
LG080	50 cm	80 cm
LG098	50 cm	98 cm

Solid element as shown in drawing.
Ledges with edge protection on both sides.

Individual production in running meter possible.

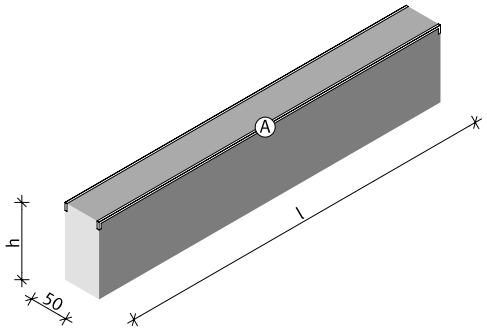

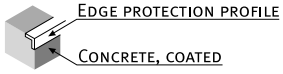

Detail: A

Round ledge D

Product Code	Length	Width	Height
RL298	665 cm	50 cm	98 cm
RL212	785 cm	50 cm	120 cm
RL214	895 cm	50 cm	140 cm
RL216	1005 cm	50 cm	160 cm
RL218	1115 cm	50 cm	200 cm

If required, ledges with edge protection on both sides.
Individual production possible.
For a table width of 240 cm.

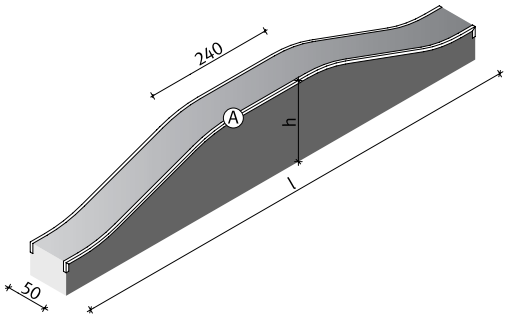

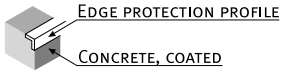

Detail: A

A New: Ledge add-on element with ledge extension 15°

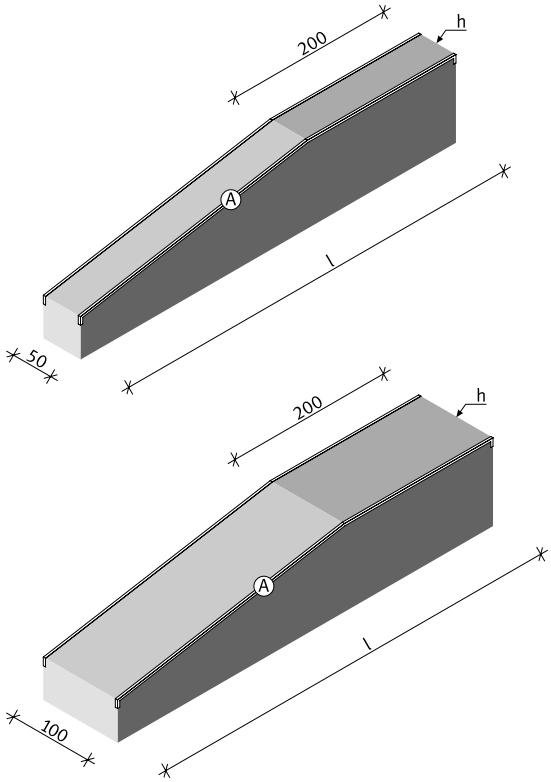

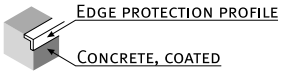

Detail: A

Product Code	Length	Width	Height
LAV398	430 cm	50 cm	98 cm
LAV312	505 cm	50 cm	120 cm
LAV314	572 cm	50 cm	140 cm
LAV498	430 cm	100 cm	98 cm
LAV412	505 cm	100 cm	120 cm
LAV414	572 cm	100 cm	140 cm

If required, ledges with edge protection on both sides.
Individual production possible.

New: Ledge add-on element with ledge extension 20°

C

Product Code	Length	Width	Height
LAV12	425 cm	50 cm	120 cm
LAV14	475 cm	50 cm	140 cm
LAV17	535 cm	50 cm	170 cm
LAV19	612 cm	50 cm	190 cm
LAV22	425 cm	100 cm	120 cm
LAV24	475 cm	100 cm	140 cm
LAV27	535 cm	100 cm	170 cm
LAV29	612 cm	100 cm	190 cm

If required, ledges with edge protection on both sides.
Individual production possible.

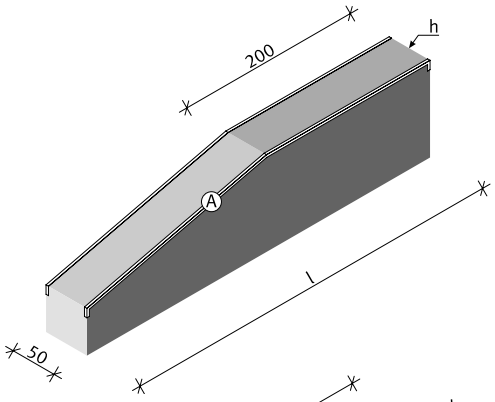

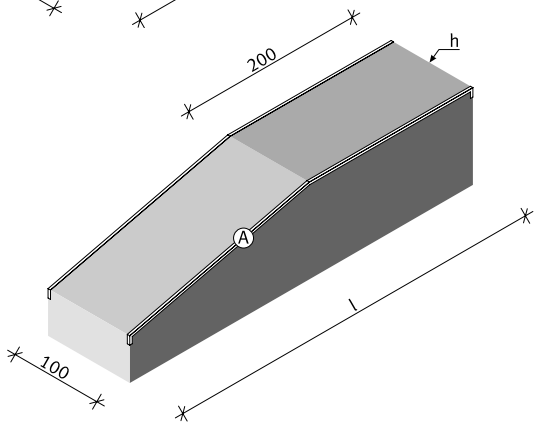

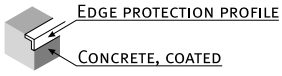

Detail: A

A Ledge add-on element for bank 15°

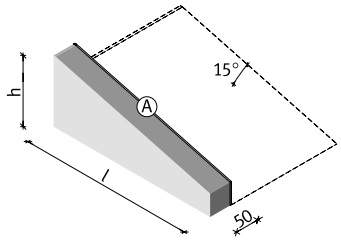

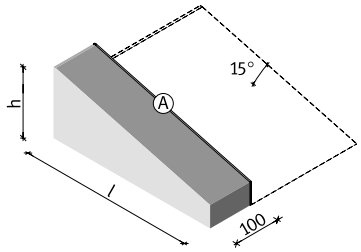

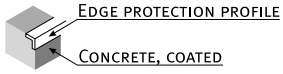

Detail: A

Product Code	Length	Width	Height
LA098	235 cm	50 cm	98 cm
LA120	310 cm	50 cm	120 cm
LA140	377 cm	50 cm	140 cm
LA398	235 cm	100 cm	98 cm
LA312	310 cm	100 cm	120 cm
LA314	377 cm	100 cm	140 cm

Solid element as shown in drawing.
If required, ledges with edge protection on both sides.

B Ledge add-on element for bank 20°

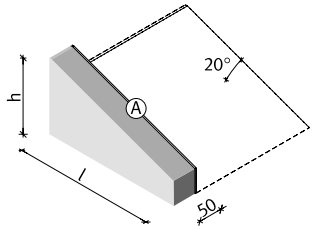

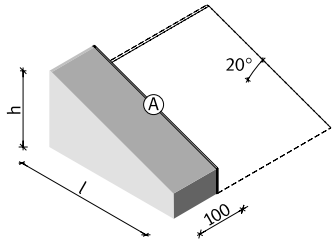

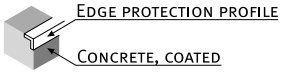

Detail: A

Product Code	Length	Width	Height
LA220	230 cm	50 cm	120 cm
LA240	280 cm	50 cm	140 cm
LA270	340 cm	50 cm	170 cm
LA290	417 cm	50 cm	190 cm
LA412	230 cm	100 cm	120 cm
LA414	280 cm	100 cm	140 cm
LA417	340 cm	100 cm	170 cm
LA419	417 cm	100 cm	190 cm

Solid element as shown in drawing.
If required, ledges with edge protection on both sides.

Ledge add-on element for stairs C

Product Code	Length	Width	Height
CT098	165 cm	50 cm	98 cm
CT120	220 cm	50 cm	120 cm
CT140	270 cm	50 cm	140 cm
CT160	330 cm	50 cm	170 cm
CT190	385 cm	50 cm	190 cm

Solid element as shown in drawing.
If required, ledges with edge protection on both sides.

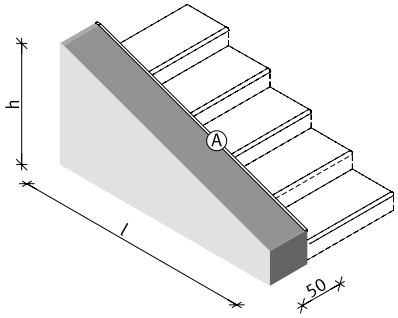

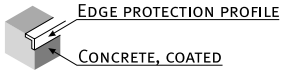

Detail: A

New: Bank ledge with stairs D

Product Code	Length	Width	Height
BL098	510 cm	816 cm	60 cm / 98 cm

Stairs and ledges with edge protection.

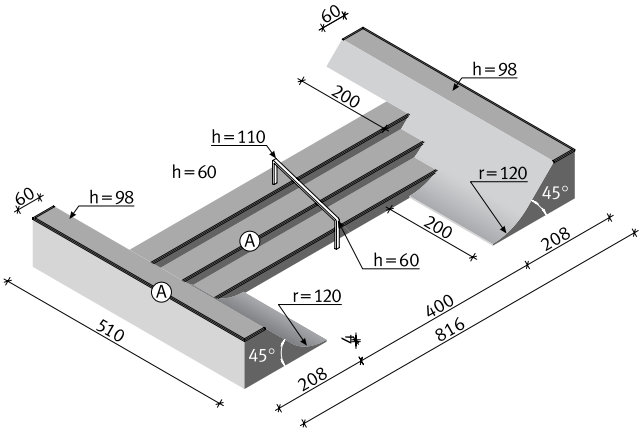

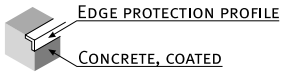

Detail: A

A Triangle

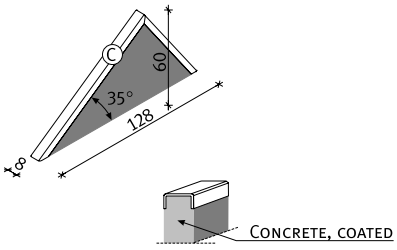

Detail: C

Product Code	Length	Width	Height
TA060	128 cm	8 cm	60 cm

Solid element as shown in drawing.

B Venice bench

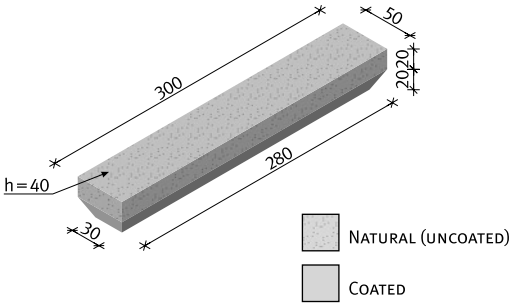

Product Code	Length	Width	Height
VB001	300 cm	50 cm	40 cm

Solid element as shown in drawing.

Curb edges without edge protection (are subject to wear and tear), 10 mm rounded.

C Curb box

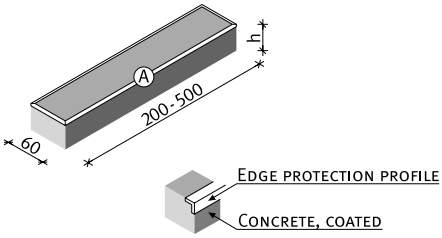

Detail: A

Product Code	Width	Width	Height
CB003	200 - 500 cm	60 cm	20 cm
CB002	200 - 500 cm	60 cm	30 cm
CB001	200 - 500 cm	60 cm	40 cm

Solid element as shown in drawing.

Individual production possible.

Curb box, inclined D

Product Code	Length	Width	Height
CBS01	500 cm	60 cm	60-30 cm
CBS02	300 cm	60 cm	40-30 cm

Solid element as shown in drawing.
Individual production possible.

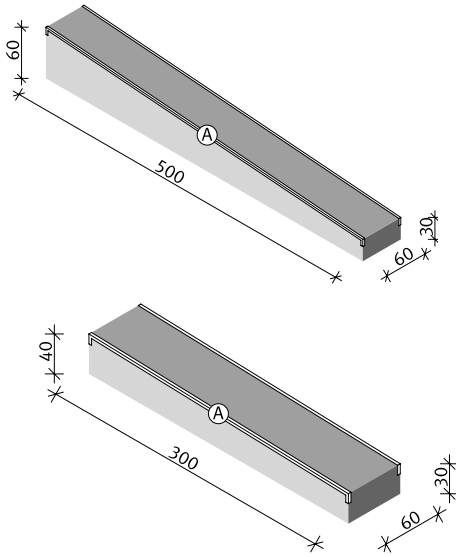

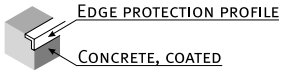

Detail: A

New: Kicker curb E

Product Code	Length	Width	Height
KB004	400 cm	100 cm	30 cm / 64 cm

Solid element as shown in drawing.
Kicker curb with edge protection on all sides.

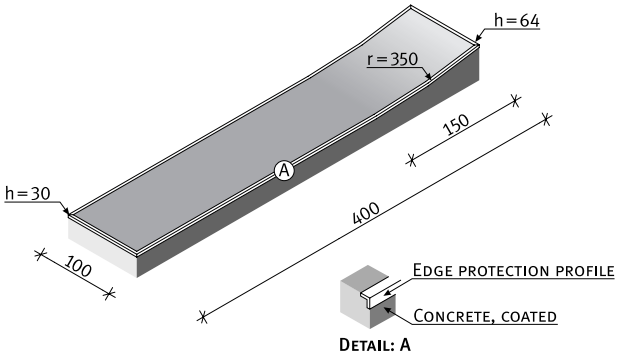

Detail: A

A Couch

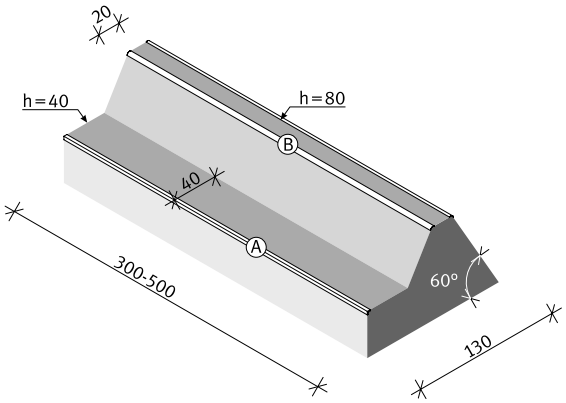

Product Code	Width	Height
COU01	130 cm	40 cm / 80 cm

Solid element as shown in drawing.

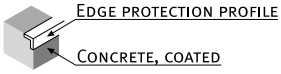

Detail: A

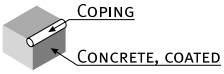

Detail: B

B Wheelie table

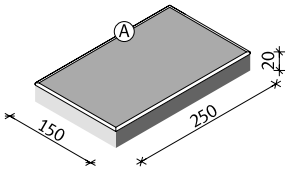

Product Code	Length	Width	Height
OB001	250 cm	150 cm	20 cm

Solid element as shown in drawing.

Individual production possible.

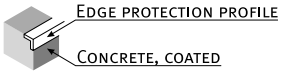

Detail: A

Wheelie table, low/high

C

Product Code	Length	Width	Height
OBC02	250 cm	150 cm	25 cm / 40 cm
OBC01	250 cm	150 cm	30 cm / 50 cm

Solid element as shown in drawing.

Individual production possible.

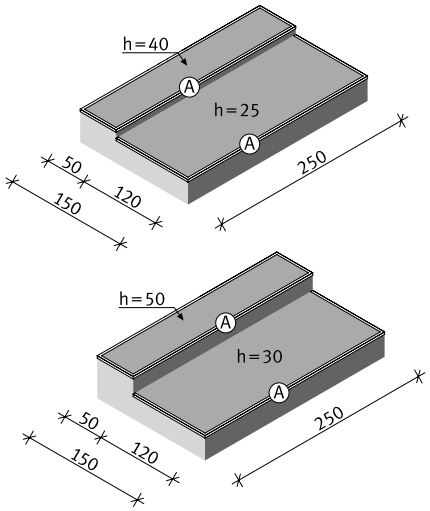

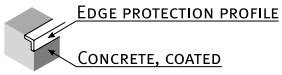

Detail: A

Three level wheelie table

D

Product Code	Length	Width	Height
TLO01	300 cm	300 cm	20 cm / 40 cm / 50 cm

Solid element as shown in drawing.

Individual production possible.

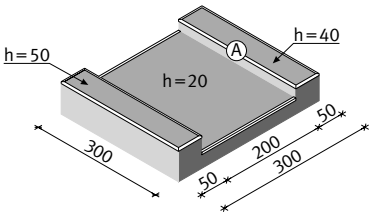

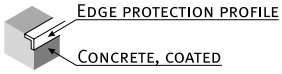

Detail: A

A Picnic table

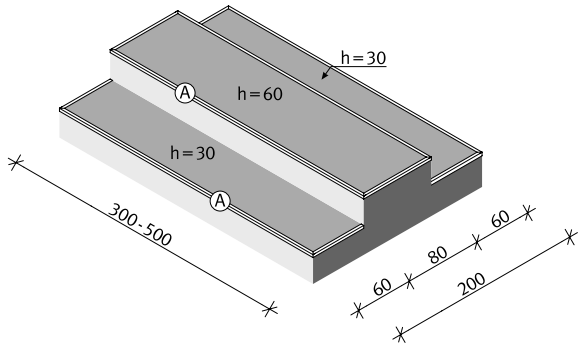

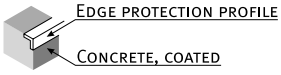

Detail: A

Product Code	Width	Height
PIT01	200 cm	30 cm / 60 cm

Solid element as shown in drawing.

B Tri Grind box

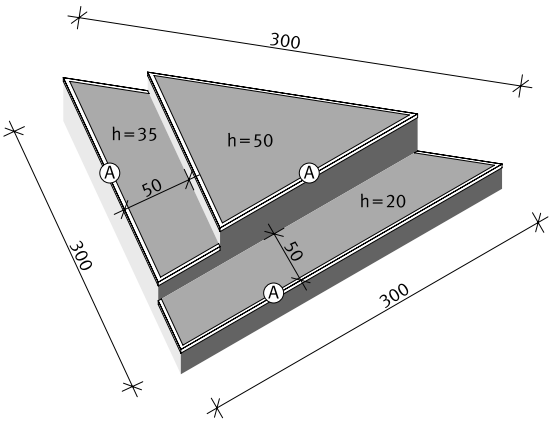

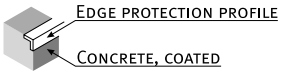

Detail: A

Product Code	Length	Width	Height
TG060	300 cm	300 cm	20 cm/35 cm/50 cm

Solid element as shown in drawing.

New: Convex curb C

Product Code	Length	Width	Height
CVC40	300 cm	80 cm	40 cm

Solid element as shown in drawing.

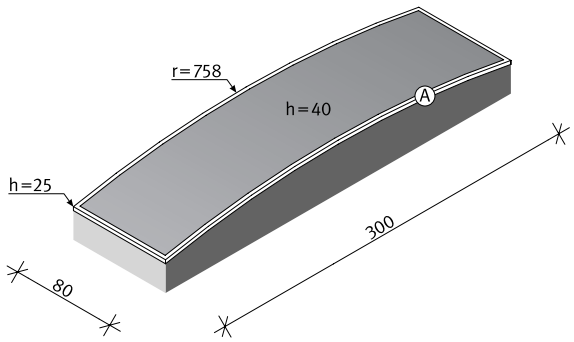

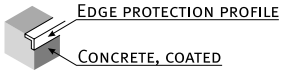

Detail: A

New: Convex picnic table D

Product Code	Length	Width	Height
CSC55	300 cm	200 cm	40 cm / 55 cm

Solid element as shown in drawing.

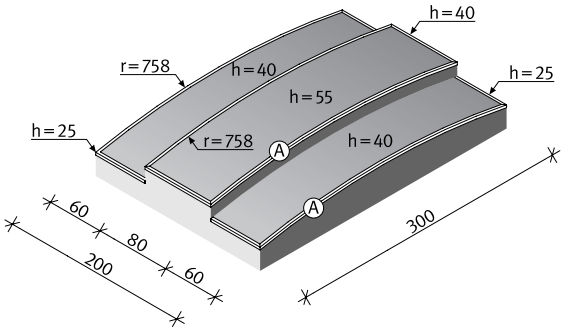

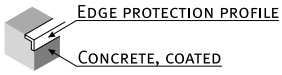

Detail: A

A Grind corner

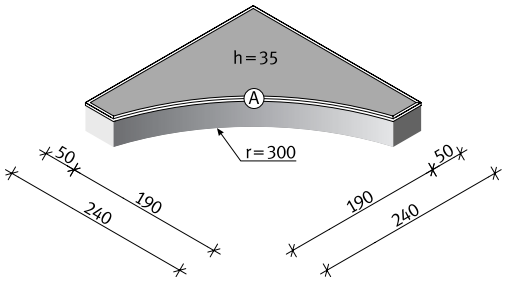

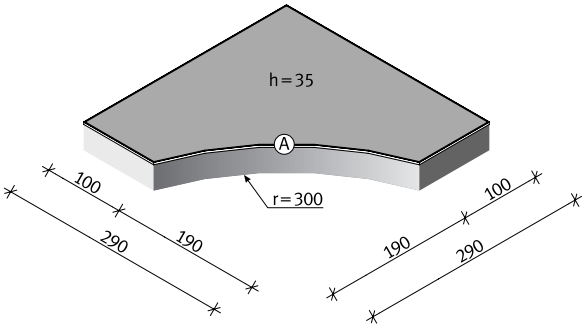

Product Code	Length	Width	Height
GC001	240 cm	240 cm	35 cm
GC002	290 cm	290 cm	35 cm

Solid element as shown in drawing.

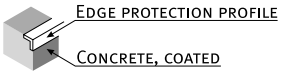

Detail: A

B Grind corner with wheelie table

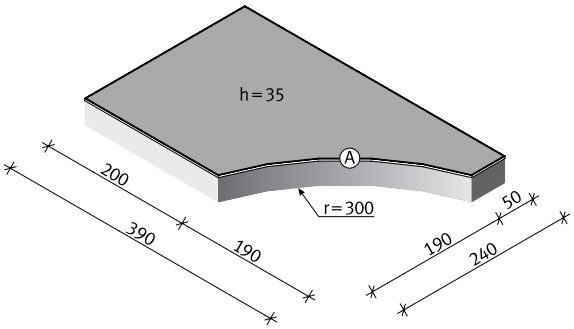

Product Code	Length	Width	Height
OGC01	390 cm	240 cm	35 cm

Solid element as shown in drawing.

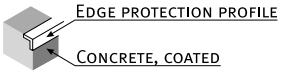

Detail: A

Wheelie box C

Product Code	Length	Width	Height
WB001	390 cm	290 cm	35 cm/50 cm

Solid element as shown in drawing.

Curb edges without edge protection (subject to wear and tear),
10 mm rounded.
Naturally waxed surface for real street feeling.

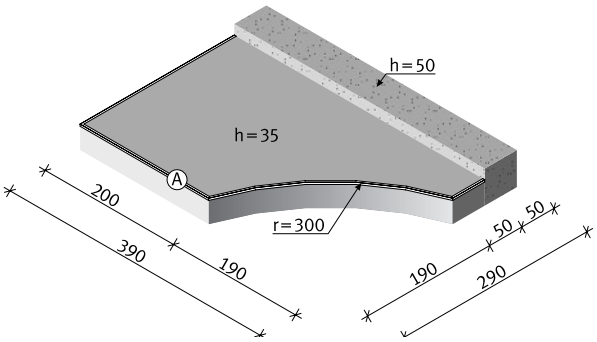

Natural (uncoated)

Coated

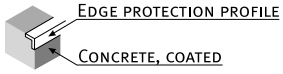

Detail: A

Curved curb D

Product Code	Length	Width	Height
CL001	240 cm	50 cm	40 cm

Solid element as shown in drawing.

Curb edges without edge protection (subject to wear and tear),
10 mm rounded.
If required, element also available with galvanized edge protection.

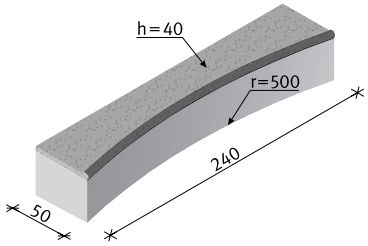

Natural (uncoated)

Coated

A Angle curb

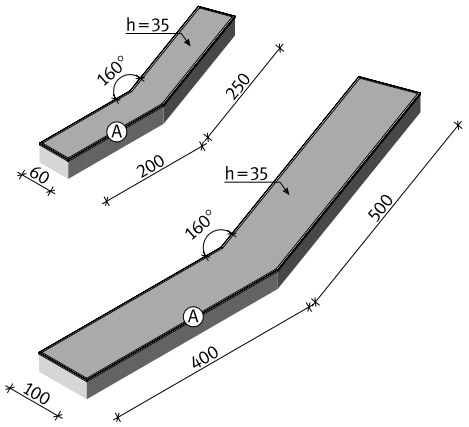

Product Code	Length	Width	Height
ANC01	450 cm	60 cm	35 cm
ANC02	900 cm	100 cm	35 cm

Solid element as shown in drawing.
Individual production possible.

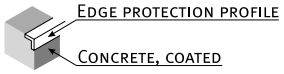

Detail: A

B Two-step angle curb

Product Code	Length	Width	Height
TAC01	700 cm	320 cm	30 cm/40 cm/60 cm

Solid element as shown in drawing.

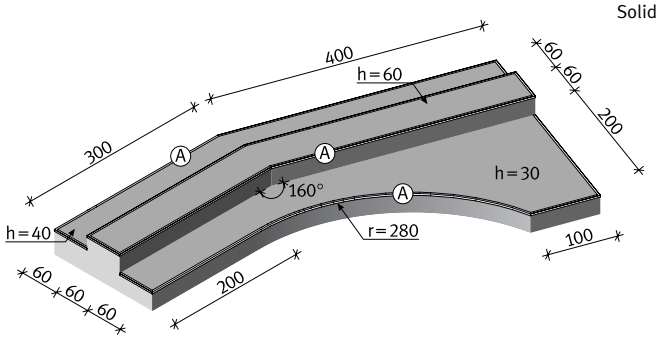

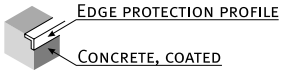

Detail: A

New: Low2High with kicker

C

Product Code	Length	Width	Height
HLK70	960 cm	360 cm	20 cm/30 cm/70 cm

Solid element as shown in drawing.

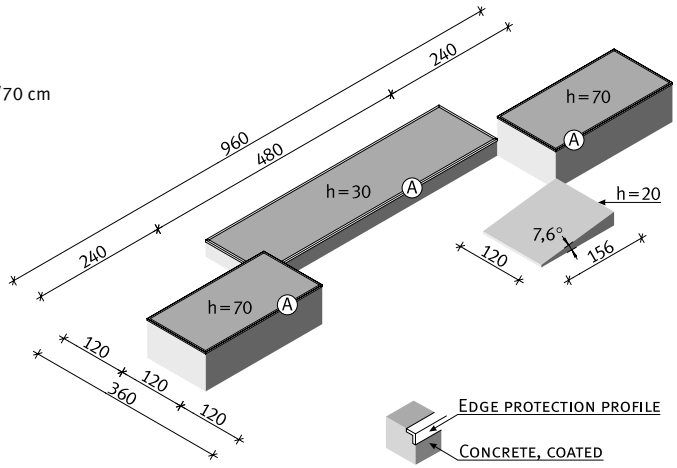

Detail: A

New: Picnic table with kicker

D

Product Code	Length	Width	Height
KPT60	415 cm	240 cm	30 cm / 60 cm

All dimensions given in standard execution.
Correspondingly larger if equipped with a metal transition sheet.

Solid element as shown in drawing.
Element with edge protection

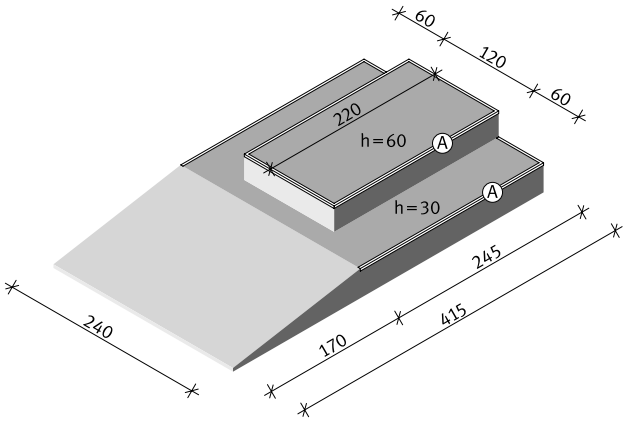

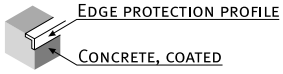

Detail: A

A New: Long wheelie table combi

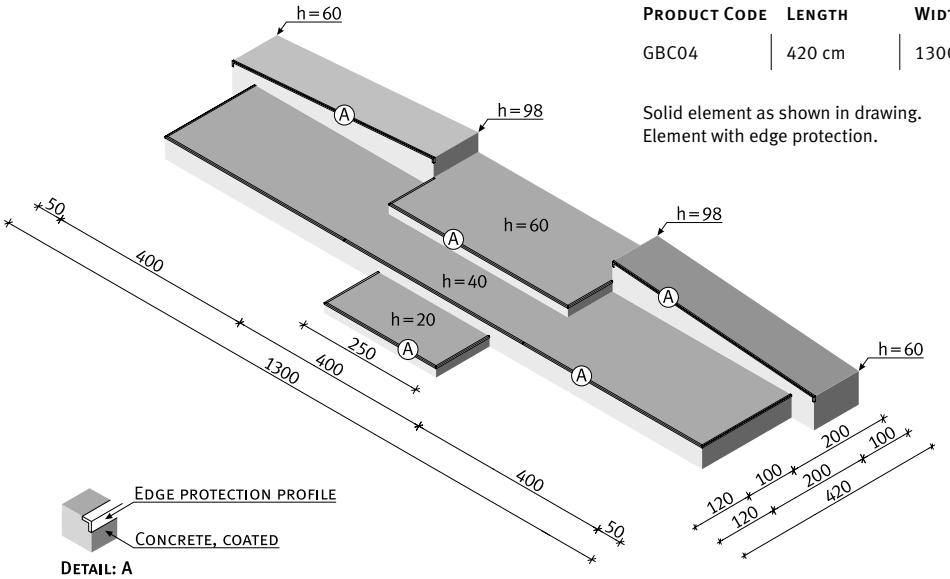

Detail: A

Product Code	Length	Width	Height
GBC04	420 cm	1300 cm	20 cm/40 cm/60 cm/98 cm

Solid element as shown in drawing.
Element with edge protection.

B New: Kicker wheelie box

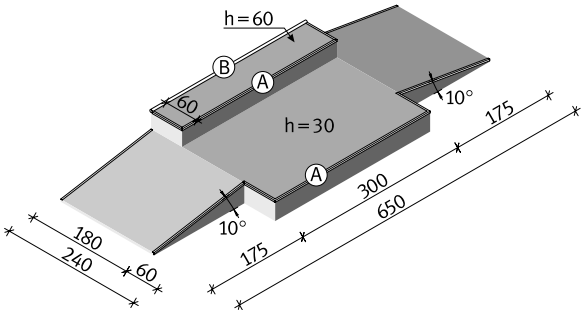

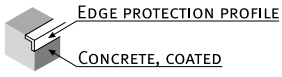

Detail: A

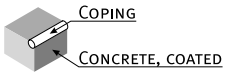

Detail: B

Product Code	Length	Width	Height
KWB60	650 cm	240 cm	30 cm / 60 cm

All dimensions given in standard execution.
Correspondingly larger if equipped with a metal transition sheet.

Solid element as shown in drawing.
Element with edge protection.

New: Wheelie table with barrier

C

Product Code	Length	Width	Height
WTS80	670 cm	320 cm	30 cm / 80 cm

All dimensions given in standard execution.
Correspondingly larger if equipped with a metal transition sheet.

Solid element as shown in drawing.
Element with edge protection.

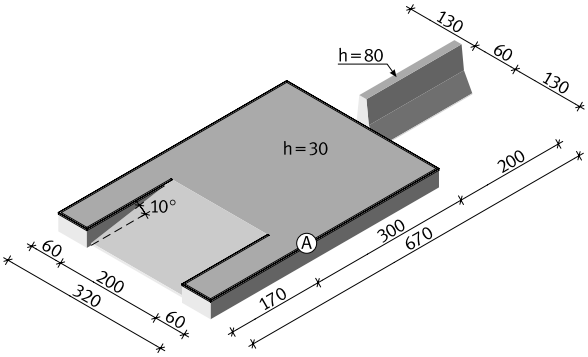

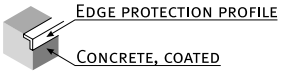

Detail: A

New: Table combi with kicker and rail

D

Product Code	Length	Width	Height
GR070	880 cm	650 cm	30 cm / 60 cm / 70 cm

All dimensions given in standard execution.
Correspondingly larger if equipped with a metal transition sheet.

Solid element as shown in drawing.
Element with edge protection.

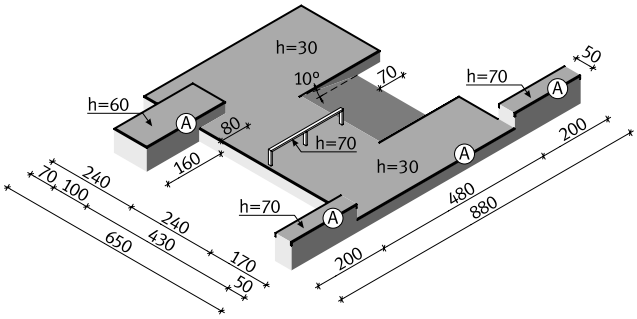

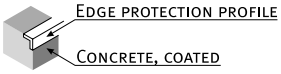

Detail: A

i

Coating_Skate elements of »raw« concrete – we were just not satisfied with this. In cooperation with skaters we developed a special procedure to achieve ideal rolling characteristics: First an artificial resin primer is applied to the concrete to get an ideal compound between the element and the coating. Then the double polyurethane coating is applied, which is not a matter of colouring, but a coating of high-class two-component synthetics. The most important advantages of our coating: 1. Ideal rolling characteristics. The coating is fast but with good grip. When wet, the elements are drying faster as the water can roll off. 2. In case of an accident you do not fall onto the rough concrete surface but onto a smooth foundation. 3. High running silence, i.e. sound emissions will be reduced additionally. The noise resulting from driving on our elements can be compared to a silent noise of rolls on the road. 4. The appearance of the element can be designed appealingly by using a selection of colours. 5. Important: All joints are hard-jointed with a mixture of artificial resin and silica sand, and are then coated. Soft joints (e.g. silicone) will be removed by the rolls within short. 6. Owing to this »artificial resin technology« renovation works in case of flaking by e.g. vandalism are easy to execute. And with the coating that follows this procedure the element is just as good as new.

Single ramps are individual elements that are located in the centre or the rim of the skate park's street area. These single ramps are obstacles that can be mastered with various tricks when skating in the park. The skater can either jump, drive or grind over the obstacle. This clearly shows that the bounds between the various groups of elements and categories are blurred. These elements are also suitable for beginners.

A Jump ramp

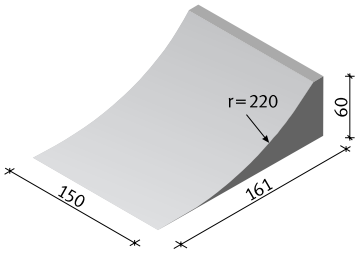

Product Code	Length	Width	Height
JR060	161 cm	150 cm	60 cm

All dimensions given in standard execution.
Correspondingly larger if equipped with a metal transition sheet.

Visible areas are closed on all sides.

B Small kicker

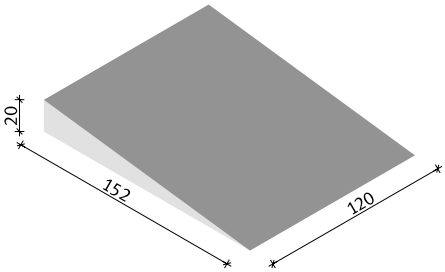

Product Code	Length	Width	Height
SMK20	152 cm	120 cm	20 cm

All dimensions given in standard execution.
Correspondingly larger if equipped with a metal transition sheet.

C New: Rooftop ramp

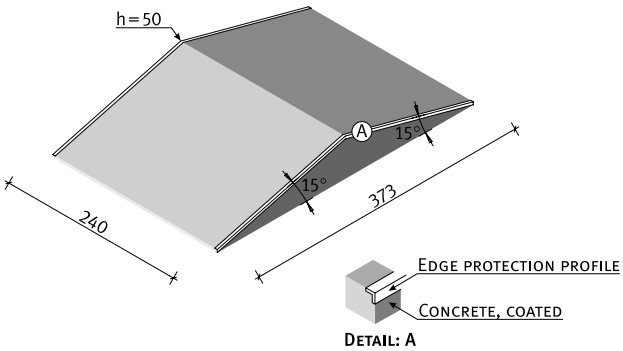

Product Code	Length	Width	Height
CC030	373 cm	240 cm	50 cm

All dimensions given in standard execution.
Correspondingly larger if equipped with a metal transition sheet.

Visible areas are closed on all sides.

Coffin break D

Product Code	Length	Width	Height
COB01	421 cm	223 cm	50 cm

All dimensions given in standard execution.
Correspondingly larger if equipped with a metal transition sheet.

Visible areas are closed on all sides.

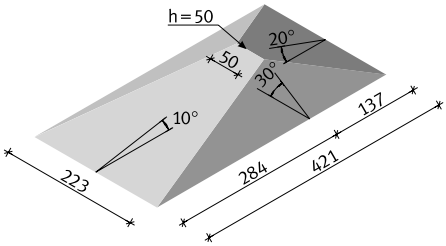

Round top pyramid E

Product Code	Length	Width	Height
RTP01	525 cm	275 cm	65 cm

All dimensions given in standard execution.
Correspondingly larger if equipped with a metal transition sheet.

Visible areas are closed on all sides.

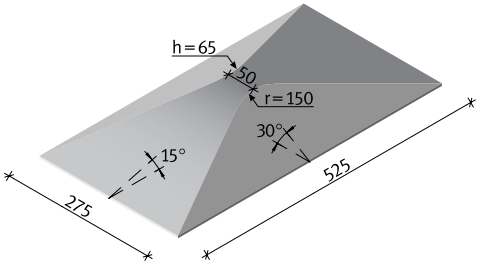

Barcelona ramp F

Product Code	Length	Width	Height
BAR	288 cm	249 cm	20 cm / 30 cm / 50 cm

All dimensions given in standard execution.
Correspondingly larger if equipped with a metal transition sheet.

Solid element as shown in drawing.

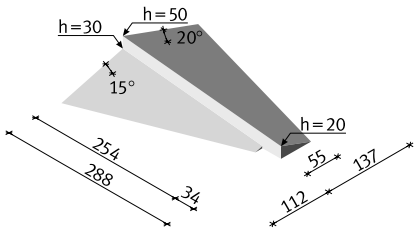

A Spanish fly

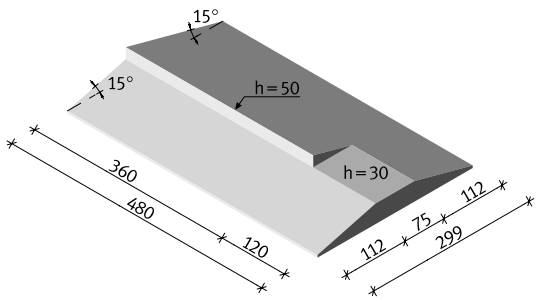

Product Code	Length	Width	Height
FLY01	480 cm	299 cm	30 cm/50 cm

All dimensions given in standard execution.
Correspondingly larger if equipped with a metal transition sheet.

Solid element as shown in drawings.

B Hill

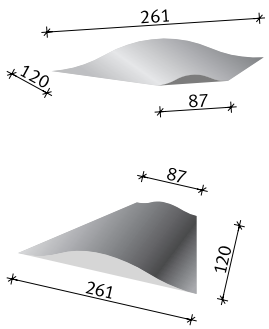

Product Code	Length	Width	Height
HL030	120 cm	261 cm	30 cm

All dimensions given in standard execution.
Correspondingly larger if equipped with a metal transition sheet.

Visible areas are closed on all sides.

C Wave

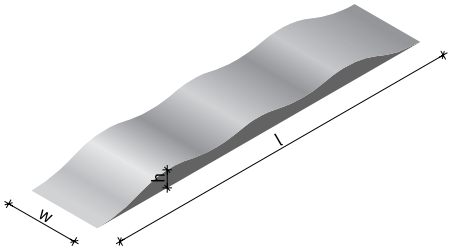

Product Code	Length	Width	Height
WE001	616 cm	120 cm	30 cm
WE002	616 cm	240 cm	30 cm

All dimensions given in standard execution.
Correspondingly larger if equipped with a metal transition sheet.

Visible areas are closed on all sides.
This element offers a lot of ideal skating fun also for beginners.

Wave with straight ledge **D**

Product Code	Length	Width	Height
WSL01	816 cm	170 cm	30 cm/60 cm

All dimensions given in standard execution.
Correspondingly larger if equipped with a metal transition sheet.

Visible areas are closed on all sides.
Element also available with coping.

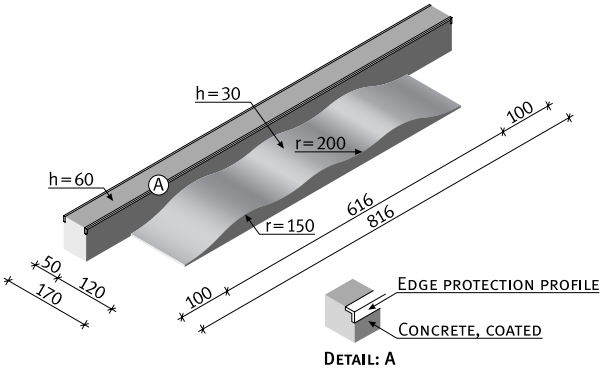

Pyra box with grind corner **E**

Product Code	Length	Width	Height
GPK01	410 cm	410 cm	30 cm / 65 cm

All dimensions given in standard execution.
Correspondingly larger if equipped with a metal transition sheet.

Visible areas are closed on all sides.

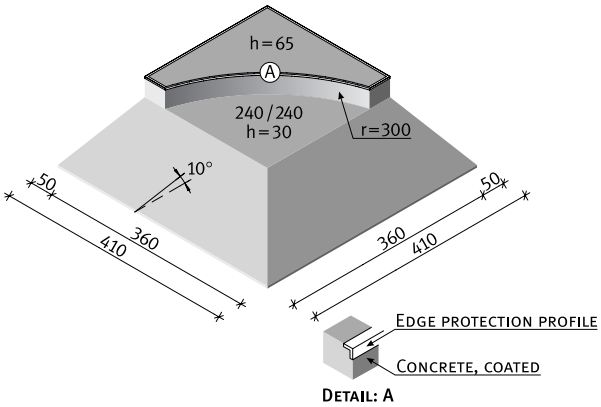

Curved ledge box **F**

Product Code	Length	Width	Height
CLB01	580 cm	295 cm	30 cm / 70 cm

All dimensions given in standard execution.
Correspondingly larger if equipped with a metal transition sheet.

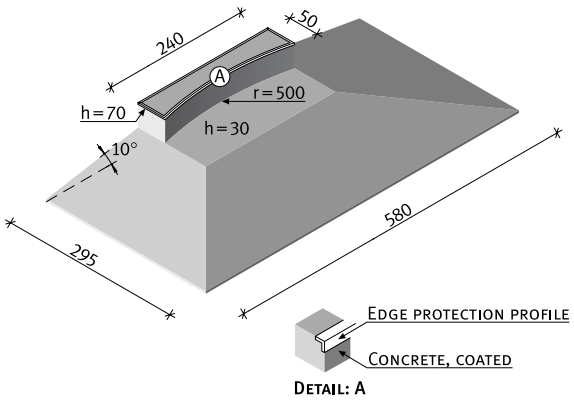

A New: Jump box

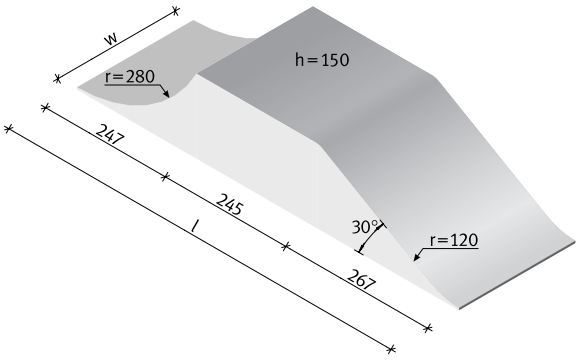

Product Code	Length	Width	Height
JB240	788 cm	240 cm	150 cm
JB360	788 cm	360 cm	150 cm

All dimensions given in standard execution.
Correspondingly larger if equipped with a metal transition sheet.

Visible areas are closed on all sides.

B Spine ramp

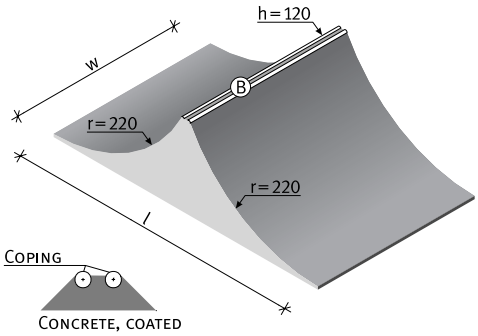

Detail: B

Product Code	Length	Width	Height
SPS198	379 cm	240 cm	98 cm
SPS120	405 cm	240 cm	120 cm
SPS150	429 cm	360 cm	150 cm
also available as a BMX ramp with a 30 cm table			
SPB150	446 cm	360 cm	148 cm

All dimensions given in standard execution. Correspondingly larger if equipped with a metal transition sheet. Visible areas are closed on all sides.
Also available as a BMX ramp, 360 cm wide, 150 cm high and with a 30 cm table.

C New: Kicker box

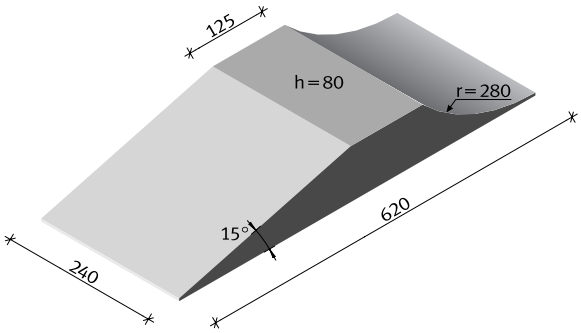

Product Code	Length	Width	Height
MR280	620 cm	240 cm	80 cm

All dimensions given in standard execution.
Correspondingly larger if equipped with a metal transition sheet.

Visible areas are closed on all sides.

Curb bank D

Product Code	Width	Height
CB070	200 cm	98 cm

All dimensions given in standard execution.
Correspondingly larger if equipped with a metal transition sheet.

Visible areas are closed on all sides.

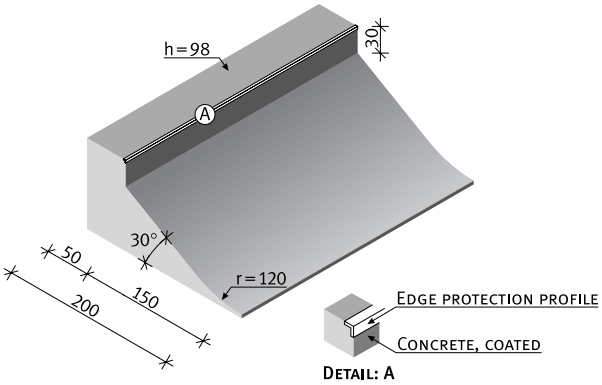

New: Rooftop ramp with ledge E

Product Code	Length	Width	Height
HDL02	600 cm	290 cm	50 cm / 90 cm

All dimensions given in standard execution.
Correspondingly larger if equipped with a metal transition sheet.

Visible areas are closed on all sides.

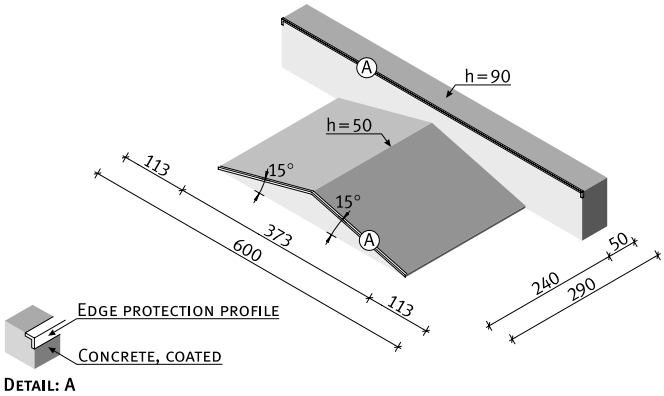

New: Waved table F

Product Code	Length	Width	Height
WT001	500 cm	120 cm	30 cm / 45 cm / 50 cm / 70 cm

All dimensions given in standard execution.
Correspondingly larger if equipped with a metal transition sheet.

Element with edge protection.

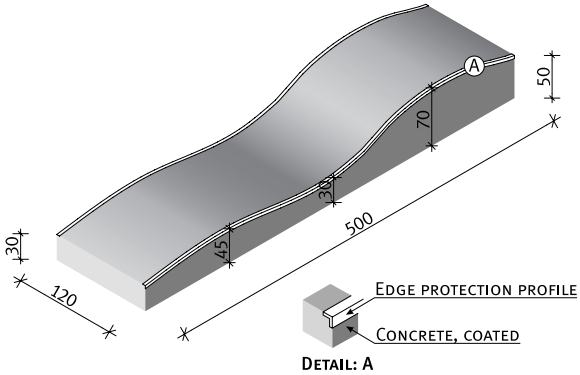

A Stairway

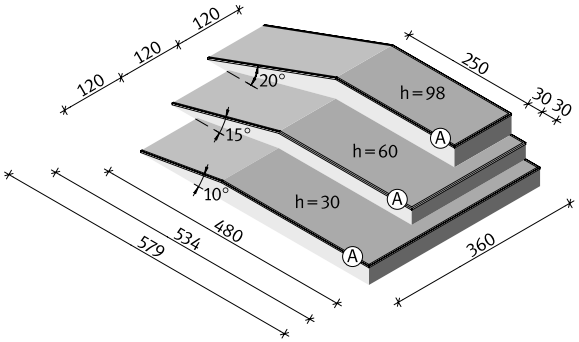

Product Code	Length	Width	Height
STW80	579 cm	360 cm	30 cm/60 cm/80 cm

All dimensions given in standard execution.
Correspondingly larger if equipped with a metal transition sheet.

Visible areas are closed on all sides.

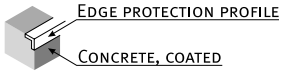

Detail: A

B Kink rail box

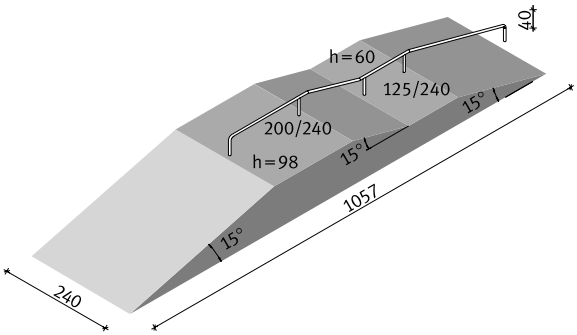

Product Code	Length	Width	Height
KRB98	1057 cm	240 cm	60 cm / 98 cm

All dimensions given in standard execution.
Correspondingly larger if equipped with a metal transition sheet.

Visible areas are closed on all sides.

Bank to bank with kink ledge C

Product Code	Length	Width	Height
MRC80	698 cm	290 cm	60 cm / 98 cm

All dimensions given in standard execution.
Correspondingly larger if equipped with a metal transition sheet.

Visible areas are closed on all sides.

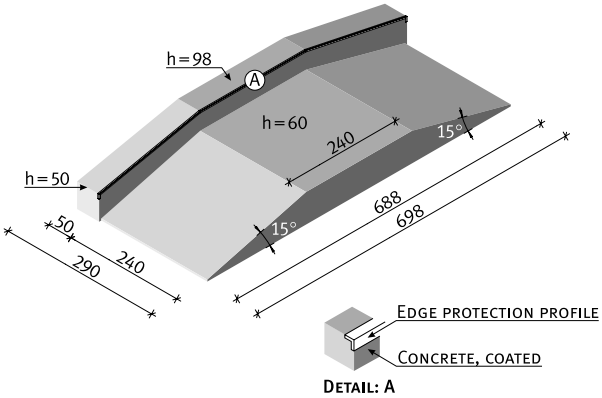

New: Big bank to bank with ledge D

Product Code	Length	Width	Height
DL098	875 cm	530 cm	98 cm / 148 cm

All dimensions given in standard execution.
Correspondingly larger if equipped with a metal transition sheet.

Visible areas are closed on all sides.

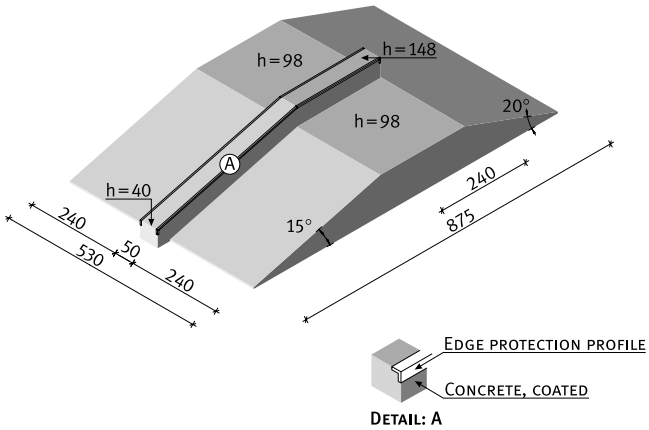

A Kink gap

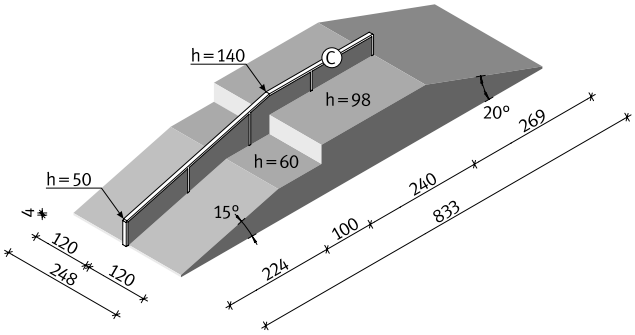

Detail: C

Product Code	Length	Width	Height
KG001	833 cm	248 cm	60 cm / 98 cm
KG002	833 cm	248 cm	60 cm / 98 cm

All dimensions given in standard execution.
Correspondingly larger if equipped with a metal transition sheet.

Visible areas are closed on all sides.
KG001 – execution without square rail
KG002 – execution with square rail, see figure

B New: Gap boardbank 01 (with ledge)

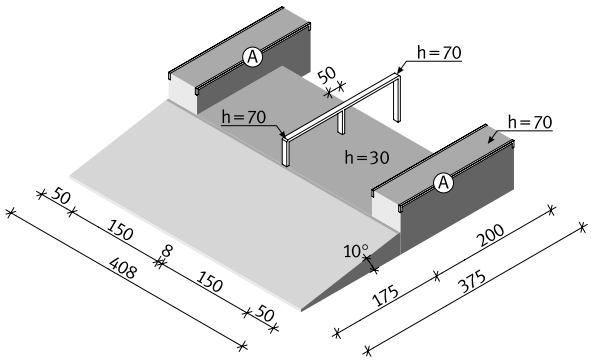

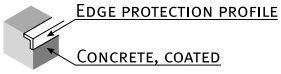

Detail: A

Product Code	Length	Width	Height
GB030	375 cm	408 cm	30 cm / 70 cm

All dimensions given in standard execution.
Correspondingly larger if equipped with a metal transition sheet.

Visible areas are closed on all sides.

New: Gap boardbank 02 (with wave ledge) C

Product Code	Length	Width	Height
GBC02	400 cm	475 cm	30 cm / 80 cm

All dimensions given in standard execution.
Correspondingly larger if equipped with a metal transition sheet.

Visible areas are closed on all sides.

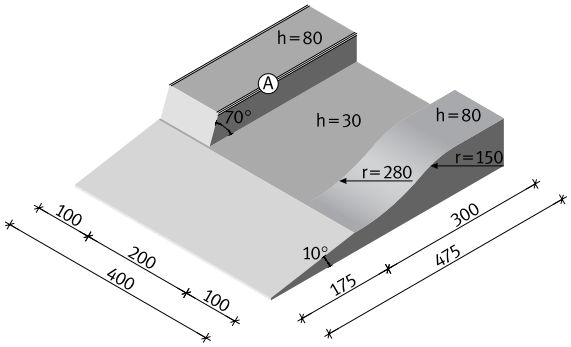

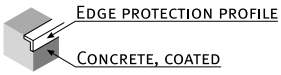

Detail: A

New: Gap boardbank 03 D

Product Code	Length	Width	Height
GBC03	529 cm	290 cm	60 cm / 98 cm

All dimensions given in standard execution.
Correspondingly larger if equipped with a metal transition sheet.

Visible areas are closed on all sides.

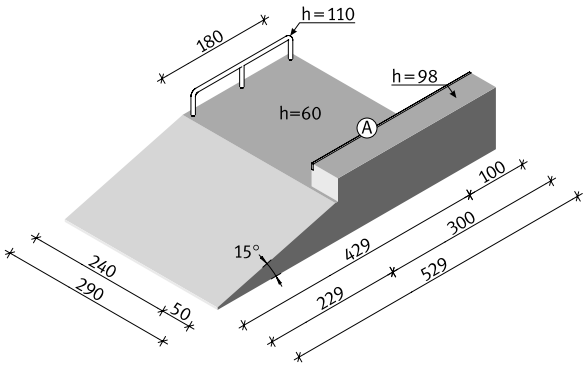

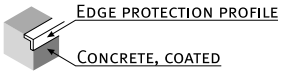

Detail: A

i

With the **modular elements** you can combine funboxes according to your own ideas. The regulations of EN 14974:2006 must be met, however, i.e. funboxes or any other central elements may not exceed a height of 150 cm (regulations for free falling heights as stipulated in the current EN 14974:2006 in force).
With the link edge corner also corners between ramp and bank can now be closed. And snakerun transitions between banks and ramps can now easily be skated with the link edge.

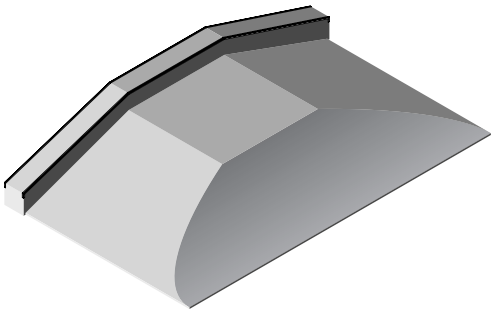

When skating a **funbox** the skater can express his full creativity. The funbox is a permanent challenge for beginners and advanced skaters alike due to the many trick variations possible at the ledges, banks, transitions, etc. And funboxes usually can be skated from various sides. Therefore their location in a park is such that there is access from all sides as well as sufficient space for running up and down, i.e. the centre of the park would be the perfect location for this element. Some of the funboxes in this catalogue may be either expanded or reduced. A funbox can also be integrated in the park in several installation stages. These funboxes are suggestions only and can be designed individually. We would be pleased to check your special request on practicability and compliance with the current EN 14974:2006.

A Boardbank with kink ledge

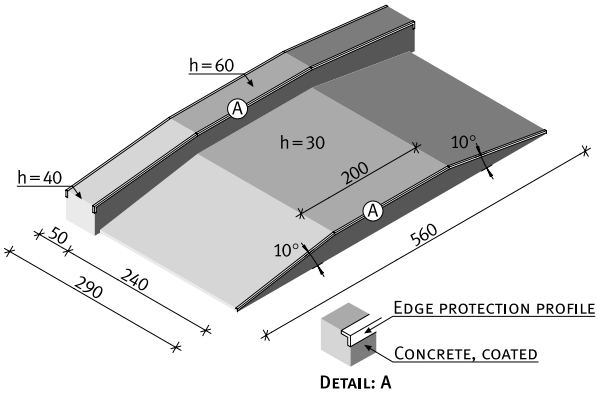

Product Code	Length	Width	Height
BC030	560 cm	290 cm	30 cm / 60 cm

All dimensions given in standard execution.
Correspondingly larger if equipped with a metal transition sheet.

Visible areas are closed on all sides.

B Boardbank with straight ledge

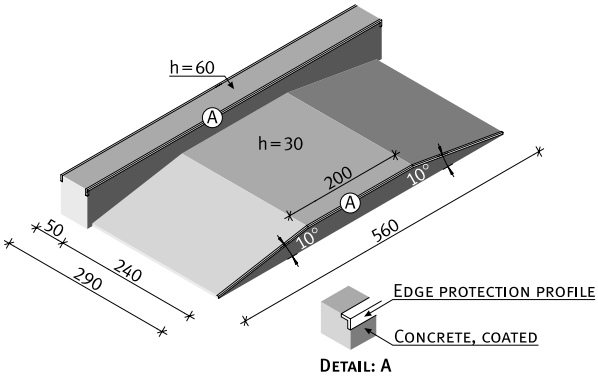

Product Code	Length	Width	Height
BC031	560 cm	290 cm	30 cm / 60 cm

All dimensions given in standard execution.
Correspondingly larger if equipped with a metal transition sheet.

C Straight boardbank

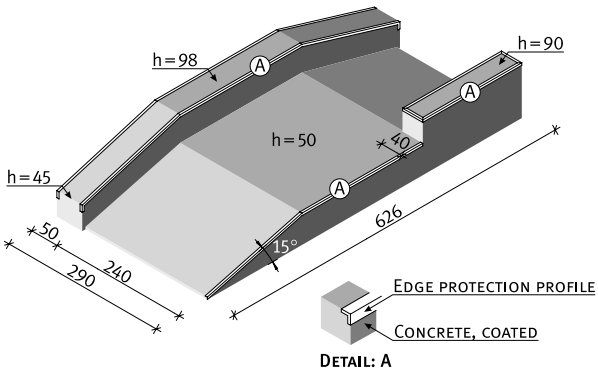

Product Code	Length	Width	Height
SB030	626 cm	290 cm	50 cm / 90 cm / 98 cm

All dimensions given in standard execution.
Correspondingly larger if equipped with a metal transition sheet.

New: Straight boardbank, extended — D

Product Code	Length	Width	Height
SB031	626 cm	450 cm	50 cm / 90 cm / 98 cm

All dimensions given in standard execution.
Correspondingly larger if equipped with a metal transition sheet.

Visible areas are closed on all sides.

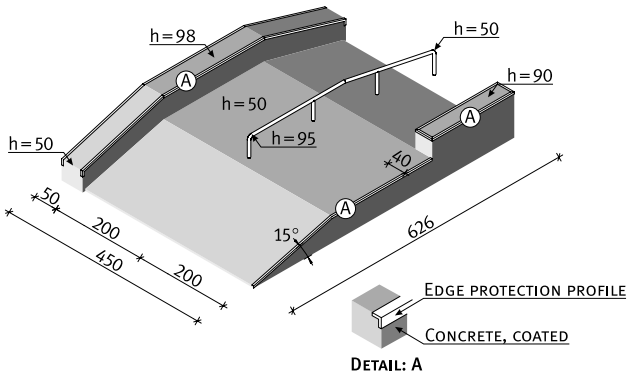

Kingsize boardbank with kink ledge — E

Product Code	Length	Width	Height
BK030	560 cm	408 cm	30 cm / 60 cm

All dimensions given in standard execution.
Correspondingly larger if equipped with a metal transition sheet.

Visible areas are closed on all sides.

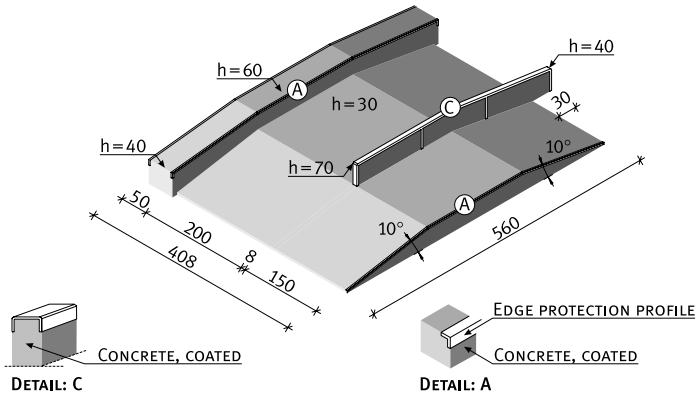

Kingsize boardbank with straight ledge — F

Product Code	Length	Width	Height
BK031	560 cm	408 cm	30 cm / 60 cm

All dimensions given in standard execution.
Correspondingly larger if equipped with a metal transition sheet.

Visible areas are closed on all sides.

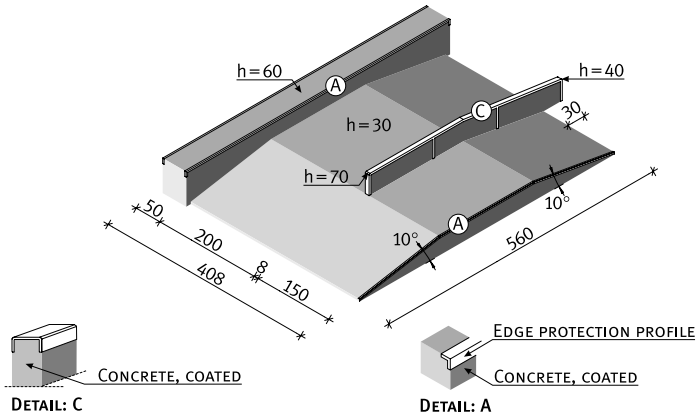

A New: Street combi

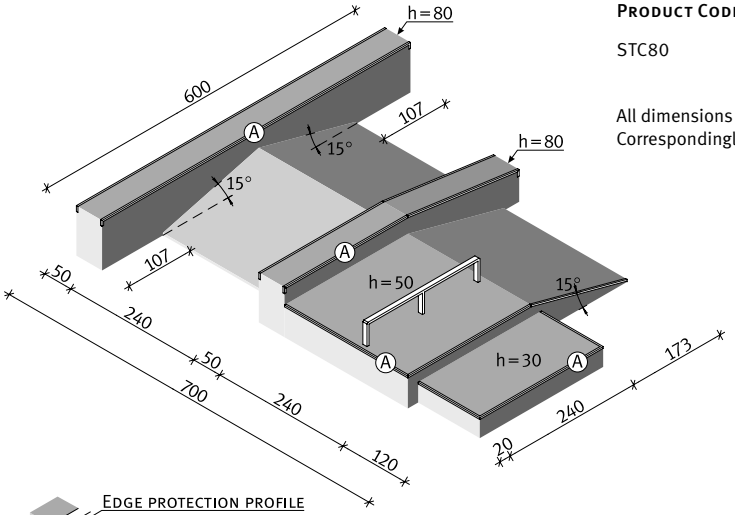

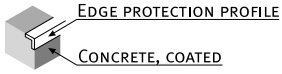

Detail: A

Product Code	Length	Width	Height
STC80	600 cm	700 cm	30 cm / 50 cm / 80 cm

All dimensions given in standard execution.
Correspondingly larger if equipped with a metal transition sheet.

B New: Boardbank with rail

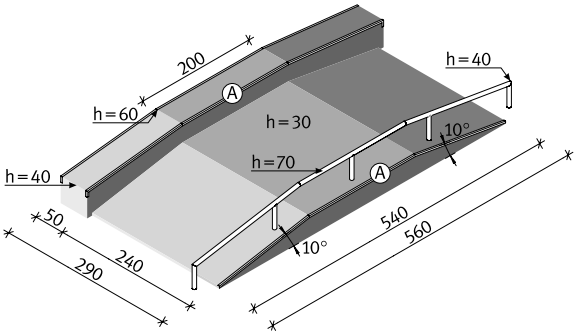

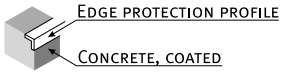

Detail: A

Product Code	Length	Width	Height
BCR01	560 cm	290 cm	30 cm / 60 cm

All dimensions given in standard execution.
Correspondingly larger if equipped with a metal transition sheet.

New: Straight boardbank with stairs 01 — C

Product Code	Length	Width	Height
BT060	734 cm	290 cm	60 cm/98 cm

All dimensions given in standard execution.
Correspondingly larger if equipped with a metal transition sheet.

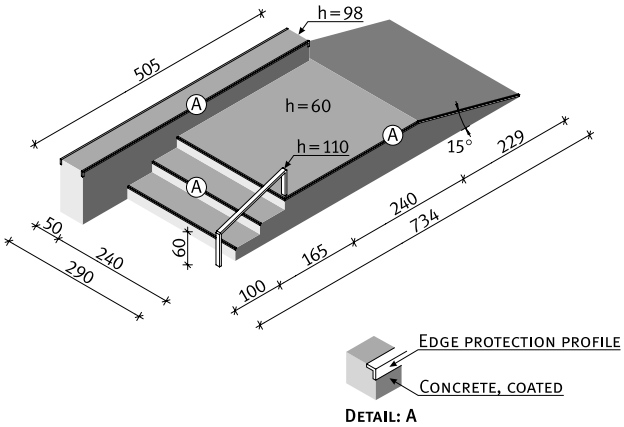

Detail: A

New: Straight boardbank with stairs 02 — D

Product Code	Length	Width	Height
BT050	626 cm	290 cm	50 cm/90 cm/98 cm

All dimensions given in standard execution.
Correspondingly larger if equipped with a metal transition sheet.

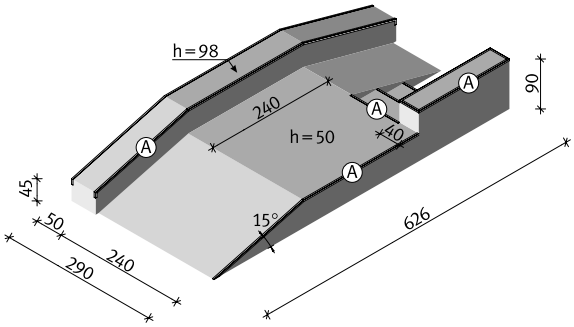

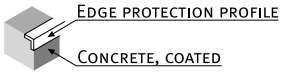

Detail: A

A New: Funbox type A

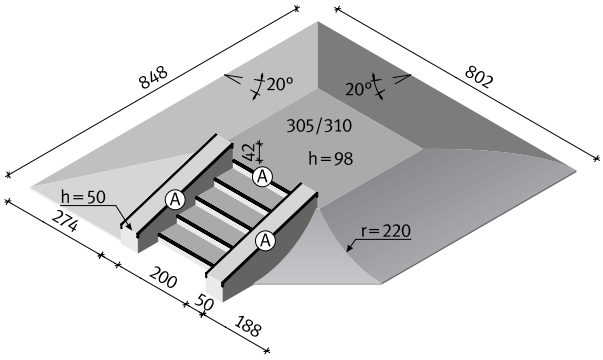

Product Code	Length	Width	Height
FTA98	848 cm	802 cm	98 cm

All dimensions given in standard execution.
Correspondingly larger if equipped with a metal transition sheet.

Visible areas are closed on all sides.

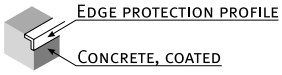

Detail: A

B New: Funbox type B

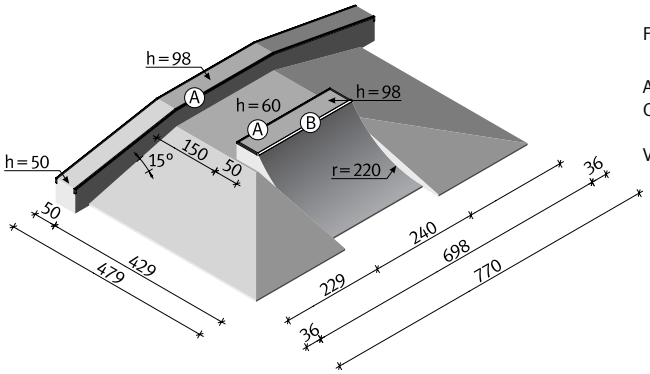

Product Code	Length	Width	Height
FTB60	770 cm	479 cm	60 cm / 98 cm

All dimensions given in standard execution.
Correspondingly larger if equipped with a metal transition sheet.

Visible areas are closed on all sides.

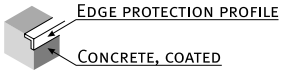

Detail: A

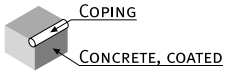

Detail: B

New: Funbox type C

C

Product Code	Length	Width	Height
FTG01	935 cm	790 cm	60 cm / 98 cm

All dimensions given in standard execution.
Correspondingly larger if equipped with a metal transition sheet.

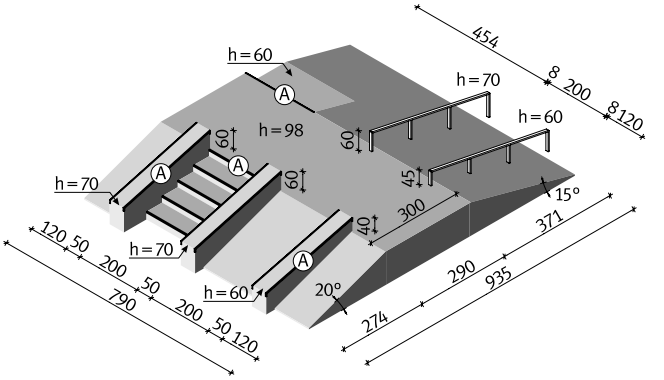

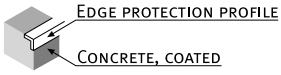

Detail: A

New: Wallride funbox with ledge and rail

D

Product Code	Length	Width	Height
WRF98	1200 cm	1138 cm	60 cm / 100 cm / 150 cm

All dimensions given in standard execution.
Correspondingly larger if equipped with a metal transition sheet.

Only possible in connection with a platform.

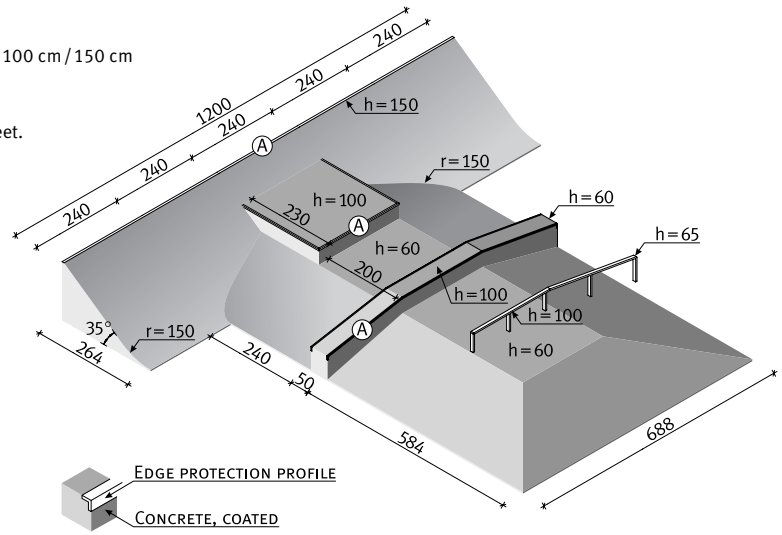

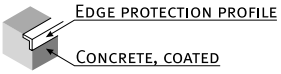

Detail: A

A Kingsize kink ledge pyramid

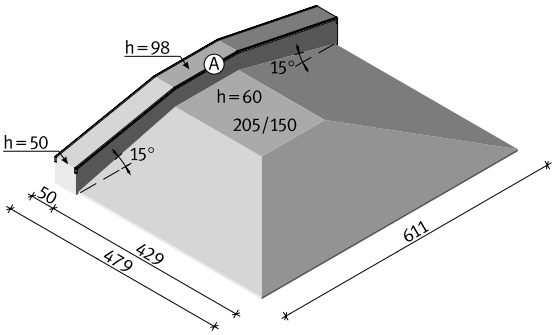

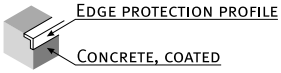

Detail: A

Product Code	Length	Width	Height
KLK10	611 cm	479 cm	60 cm / 98 cm

All dimensions given in standard execution.
Correspondingly larger if equipped with a metal transition sheet.

Visible areas are closed on all sides.

B New: Funbox curved with kink ledge

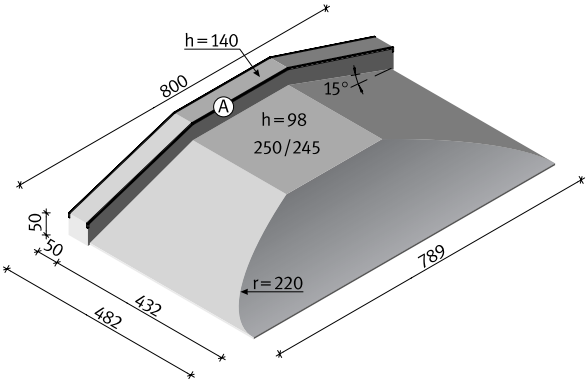

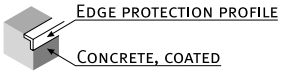

Detail: A

Product Code	Length	Width	Height
FCR10	800 cm	482 cm	98 cm / 140 cm

All dimensions given in standard execution.
Correspondingly larger if equipped with a metal transition sheet.

Visible areas are closed on all sides.
Funbox with unique corner connection elements between bank and ramp.

Super kingsize ledge pyramid C

Product Code	Length	Width	Height
KLK20	554 cm	611 cm	60 cm / 98 cm

All dimensions given in standard execution.
Correspondingly larger if equipped with a metal transition sheet.

Visible areas are closed on all sides.

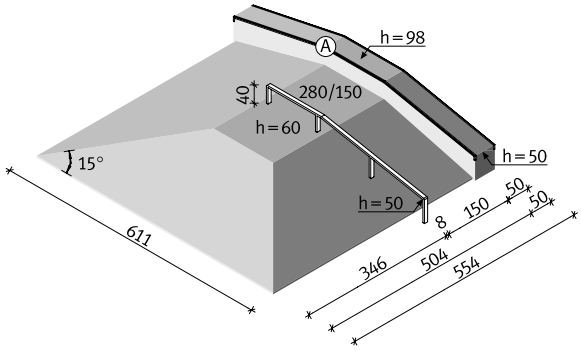

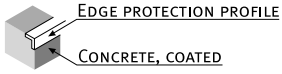

Detail: A

Big grind pyra 15° D

Product Code	Length	Width	Height
BGP10	701 cm	634 cm	60 cm / 98 cm

All dimensions given in standard execution.
Correspondingly larger if equipped with a metal transition sheet.

Visible areas are closed on all sides.

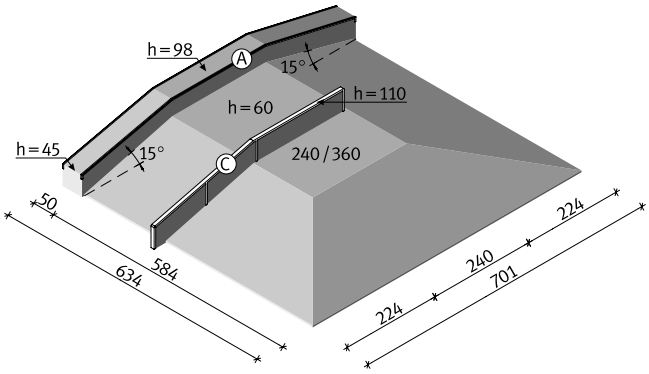

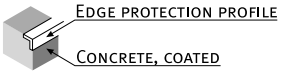

Detail: A

Detail: C

A Grind pyra box

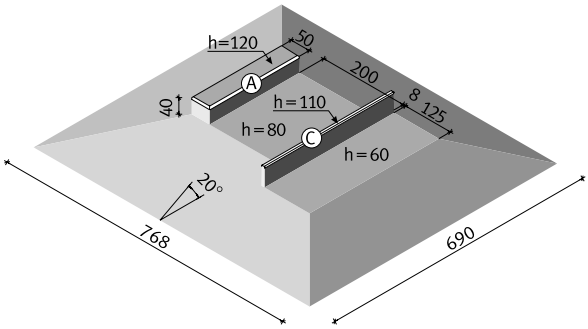

Product Code	Length	Width	Height
GPB10	768 cm	690 cm	60 cm / 80 cm / 120 cm

All dimensions given in standard execution.
Correspondingly larger if equipped with a metal transition sheet.

Visible areas are closed on all sides.

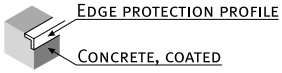

Detail: A

Detail: C

B Stealth

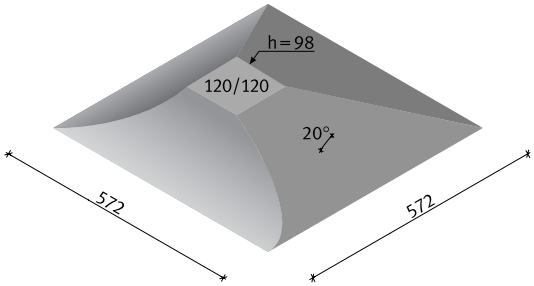

Product Code	Length	Width	Height
STE20	572 cm	572 cm	98 cm

All dimensions given in standard execution.
Correspondingly larger if equipped with a metal transition sheet.

Visible areas are closed on all sides.

Butterfly box C

Product Code	Length	Width	Height
BFB20	659 cm	486 cm	98 cm

All dimensions given in standard execution.
Correspondingly larger if equipped with a metal transition sheet.

Visible areas are closed on all sides.

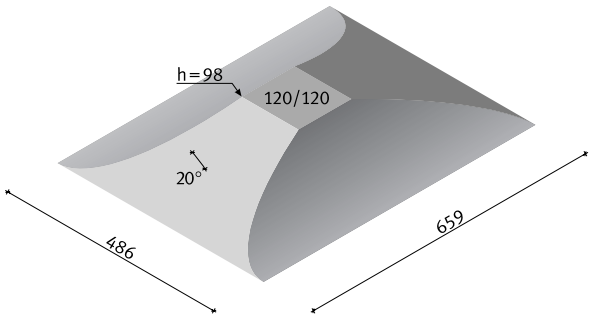

Square pyramid D

Product Code	Length	Width	Height
PQ100	568 cm	568 cm	60 cm

All dimensions given in standard execution.
Correspondingly larger if equipped with a metal transition sheet.

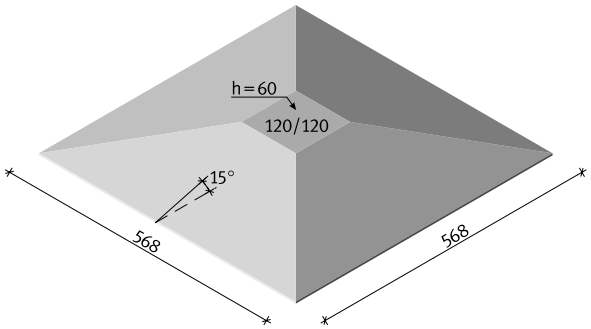

A Kingsize pyramid

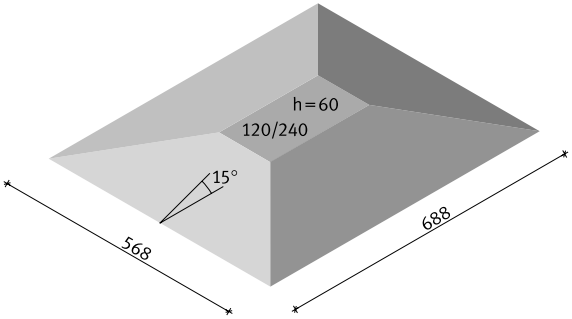

Product Code	Length	Width	Height
PR200	688 cm	568 cm	60 cm

All dimensions given in standard execution.
Correspondingly larger if equipped with a metal transition sheet.

B Two angle pyramid

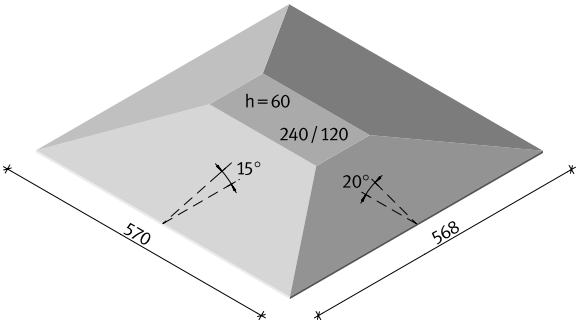

Product Code	Length	Width	Height
TAP10	568 cm	570 cm	60 cm

All dimensions given in standard execution.
Correspondingly larger if equipped with a metal transition sheet.

Visible areas are closed on all sides.
Pyramid with inclination of 15° and 20°.

C Crazy box pyramid

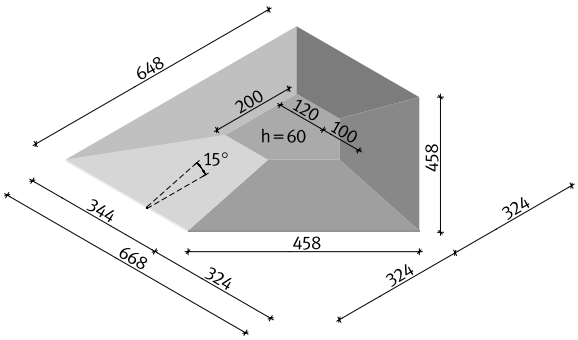

Product Code	Length	Width	Height
CBP60	668 cm	648 cm	60 cm

All dimensions given in standard execution.
Correspondingly larger if equipped with a metal transition sheet.

Visible areas are closed on all sides.

Round bank box 01 D

Product Code	Length	Width	Height
RBB001	458 cm	458 cm	60 cm

Element only available in standard execution.

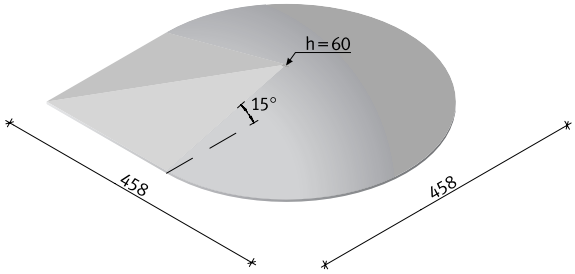

Round bank box 02 E

Product Code	Length	Width	Height
RBB002	458 cm	458 cm	60 cm

Element only available in standard execution.

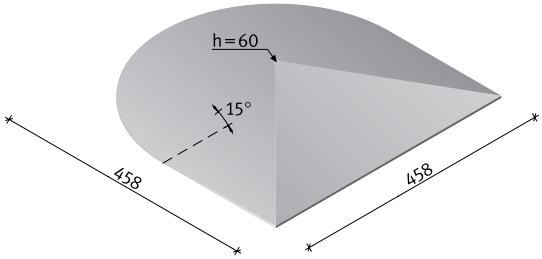

Round bank box 03 F

Product Code	Length	Width	Height
RBB003	673 cm	458 cm	60 cm

Element only available in standard execution.

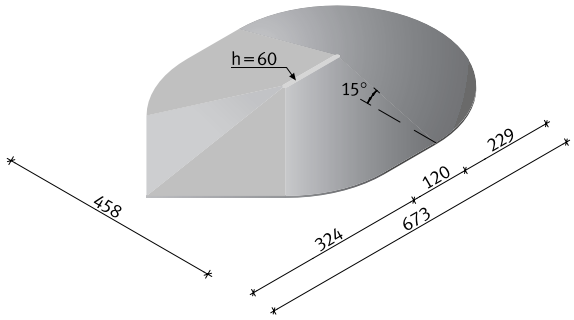

A Step pyramid 01

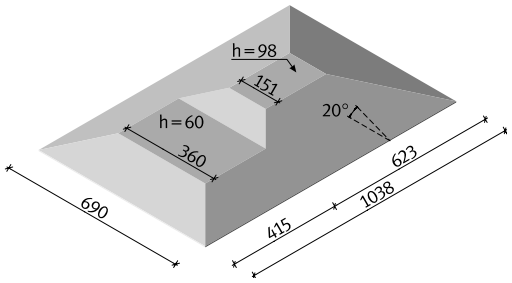

Product Code	Length	Width	Height
SP001	1038 cm	690 cm	60 cm / 98 cm

All dimensions given in standard execution.
Correspondingly larger if equipped with a metal transition sheet.

B Step pyramid 02

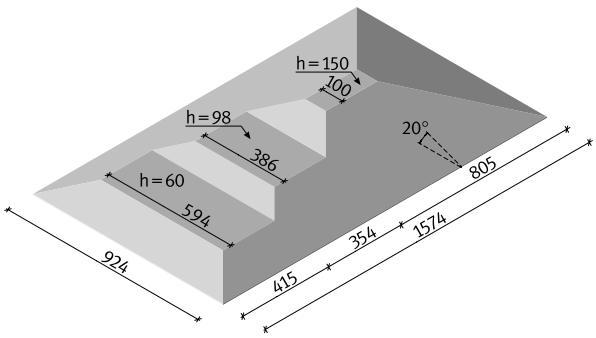

Product Code	Length	Width	Height
SP002	1574 cm	924 cm	60 cm / 98 cm / 150 cm

All dimensions given in standard execution.
Correspondingly larger if equipped with a metal transition sheet.

Kink gap combi C

Product Code	Length	Width	Height
KGC01	843 cm	522 cm	60 cm / 98 cm

All dimensions given in standard execution.
Correspondingly larger if equipped with a metal transition sheet.

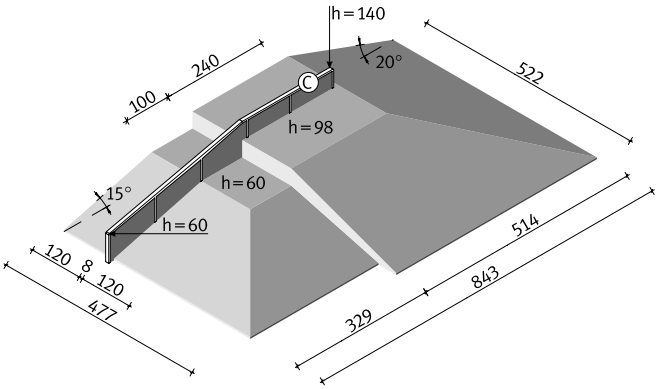

Detail: C

Tongue D

Product Code	Length	Width	Height
TON65	826 cm	493 cm	60 cm/80 cm/98 cm

Only available in standard execution.

Element also available with coping instead of edge protection.

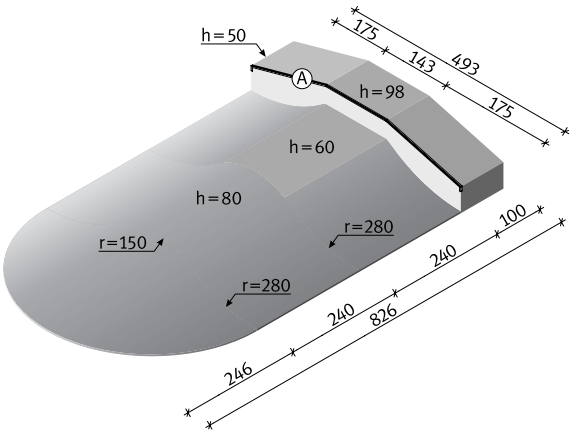

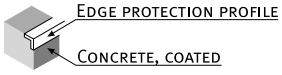

Detail: A

A Bunker box 01

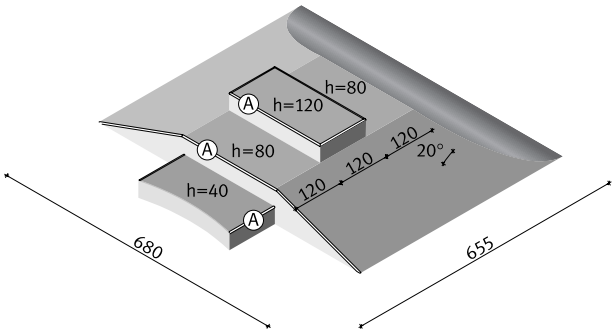

Product Code	Length	Width	Height
BBX01	680 cm	655 cm	40 cm / 80 cm / 120 cm

All dimensions given in standard execution.
Correspondingly larger if equipped with a metal transition sheet.

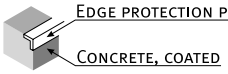

Detail: A

B Bunker box 02

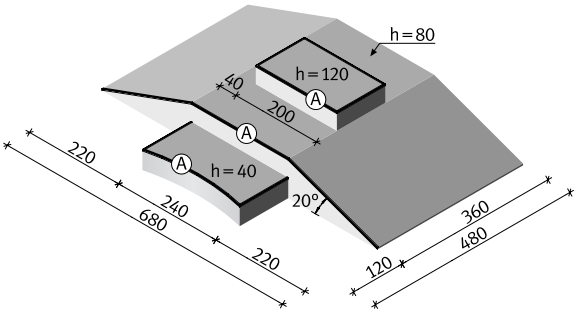

Product Code	Length	Width	Height
BBX02	680 cm	480 cm	40 cm / 80 cm / 120 cm

All dimensions given in standard execution.
Correspondingly larger if equipped with a metal transition sheet.

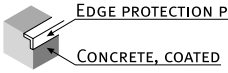

Detail: A

Bunker box 03 C

Product Code	Length	Width	Height
BBX03	690 cm	615 cm	80 cm / 120 cm

All dimensions given in standard execution.
Correspondingly larger if equipped with a metal transition sheet.

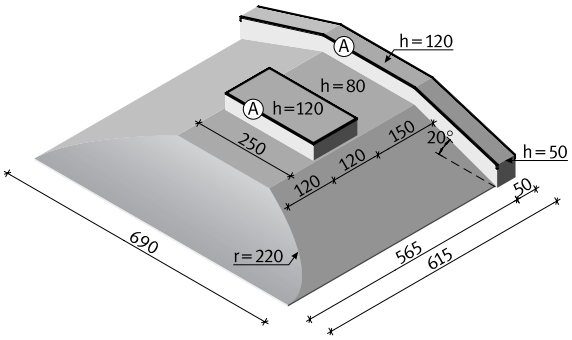

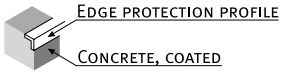

Detail: A

Diamond gap box D

Product Code	Length	Width	Height
DGB01	833 cm	738 cm	60 cm / 98 cm

All dimensions given in standard execution.
Correspondingly larger if equipped with a metal transition sheet.

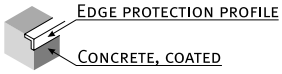

Detail: A

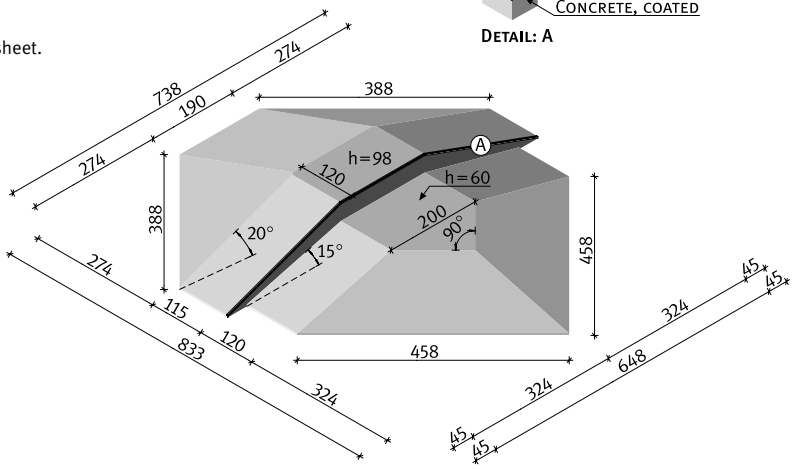

A Allround funbox

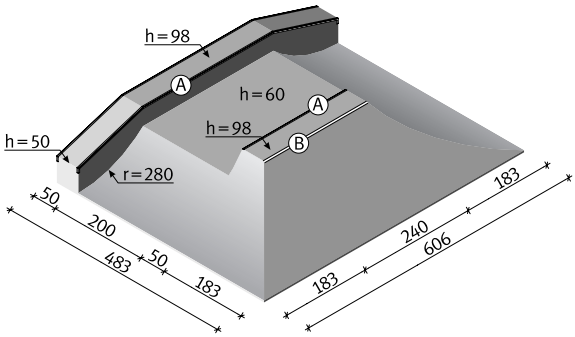

Product Code	Length	Width	Height
ARF01	606 cm	483 cm	60 cm / 98 cm

All dimensions given in standard execution.
Correspondingly larger if equipped with a metal transition sheet.

Visible areas are closed on all sides.

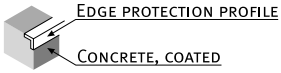

Detail: A

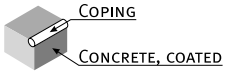

Detail: B

B Stage pyra box 01

Product Code	Length	Width	Height
SPB01	1081 cm	1195 cm	98 cm / 133 cm / 140 cm

Only available in standard execution.
Visible areas are closed on all sides.

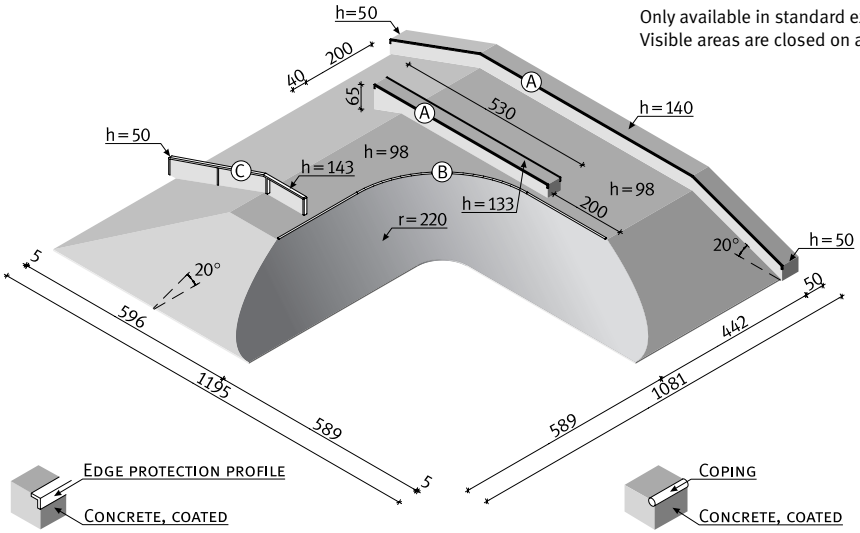

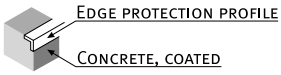

Detail: A

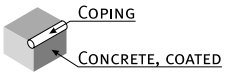

Detail: B

Detail: C

Stage pyra box 02 — C

Prod. Cde.	Length	Width	Height
SPB02	1081 cm	1195 cm	70 cm / 98 cm / 140 cm / 143 cm

Only available in standard execution.

Visible areas are closed on all sides.

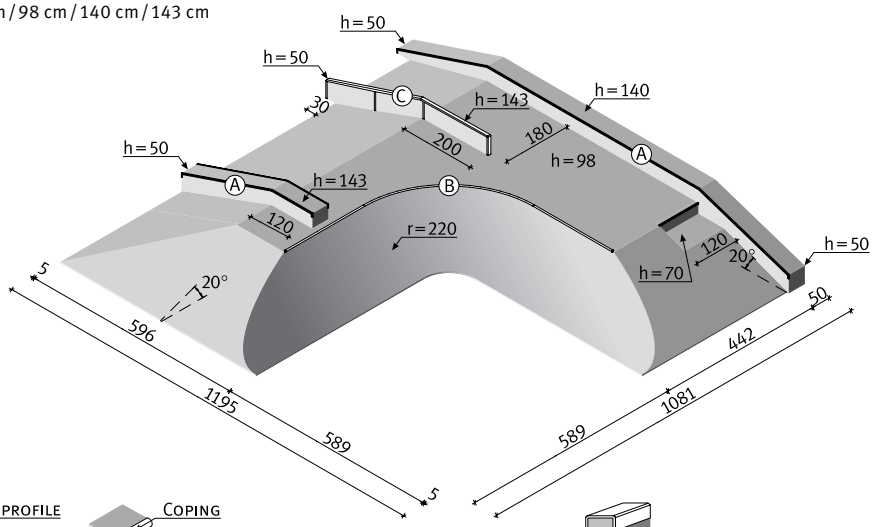

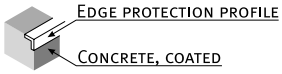

Detail: A

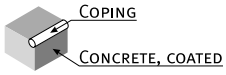

Detail: B

Detail: C

New: Kink gap + big bank to bank with ledge — D

Product Code	Length	Width	Height
KG001	888 cm	538 cm	60 cm / 98 cm / 148 cm

All dimensions given in standard execution.
Correspondingly larger if equipped with a metal transition sheet.

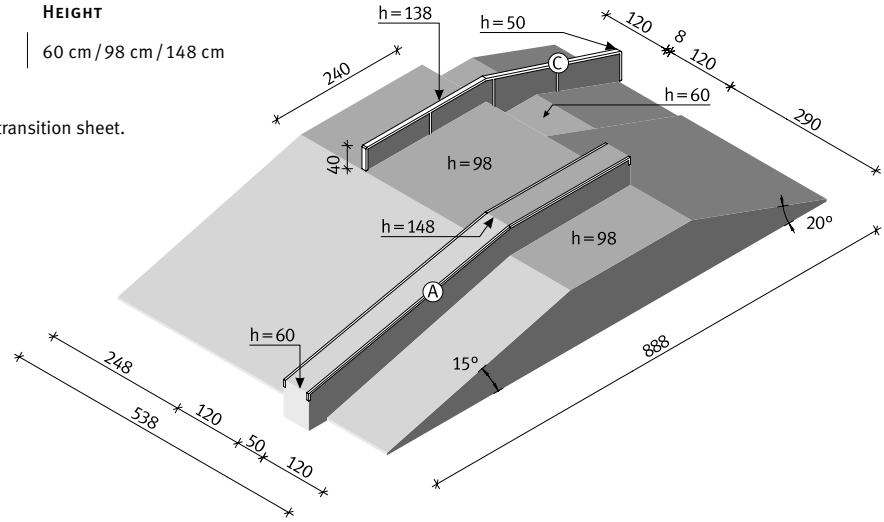

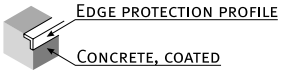

Detail: A

Detail: C

A Stage box

Product Code	Length	Width	Height
STB01	929 cm	938 cm	60 cm / 98 cm / 110 cm

All dimensions given in standard execution.
Correspondingly larger if equipped with a metal transition sheet.

Visible areas are closed on all sides.

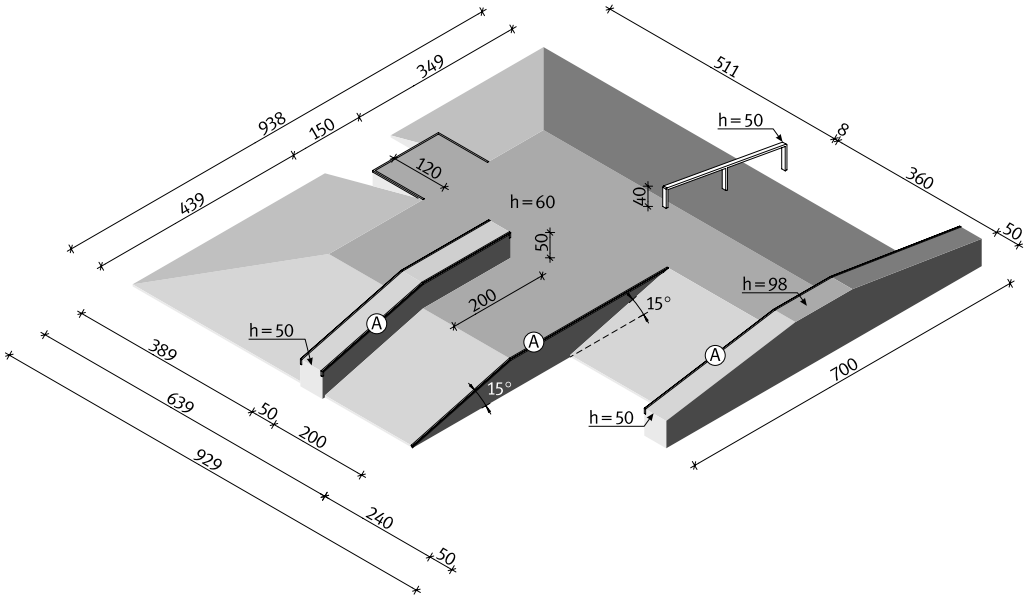

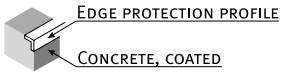

Detail: A

Ledge box maxi

B

Prod. Cde.	Length	Width	Height
LBM98	1034 cm	920 cm	35 cm / 70 cm / 98 cm / 140 cm

All dimensions given in standard execution.
Correspondingly larger if equipped with a metal transition sheet.

Visible areas are closed on all sides.

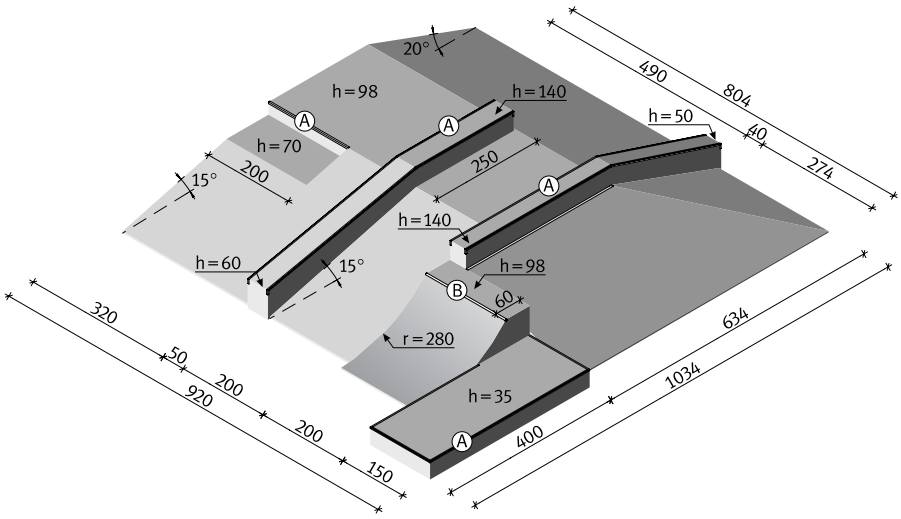

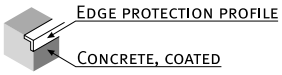

Detail: A

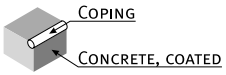

Detail: B

A Kinky funbox with pyramid

Product Code	Length	Width	Height
KFP01	700 cm	420 cm	60 cm / 98 cm
KFP02	688 cm	344 cm	60 cm

All dimensions given in standard execution.
Correspondingly larger if equipped with a metal transition sheet.

Visible areas are closed on all sides.

Element B:
KFP02

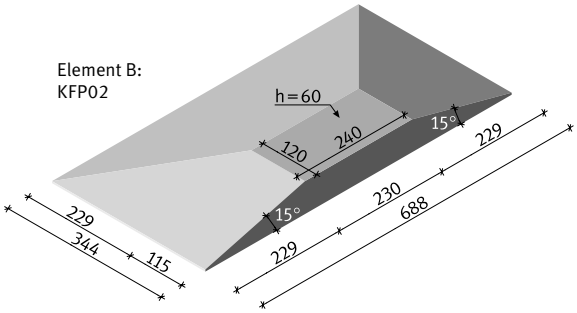

Element A:
KFP01

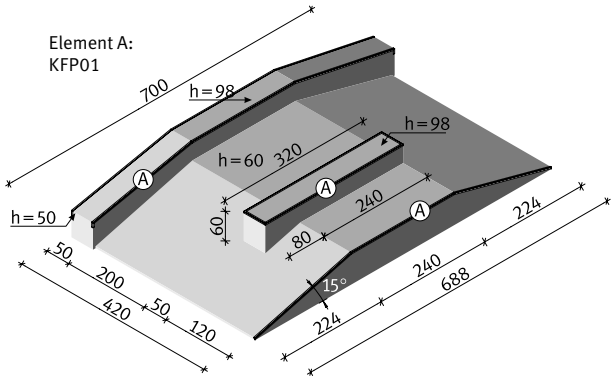

Elements A + B:
as combination element

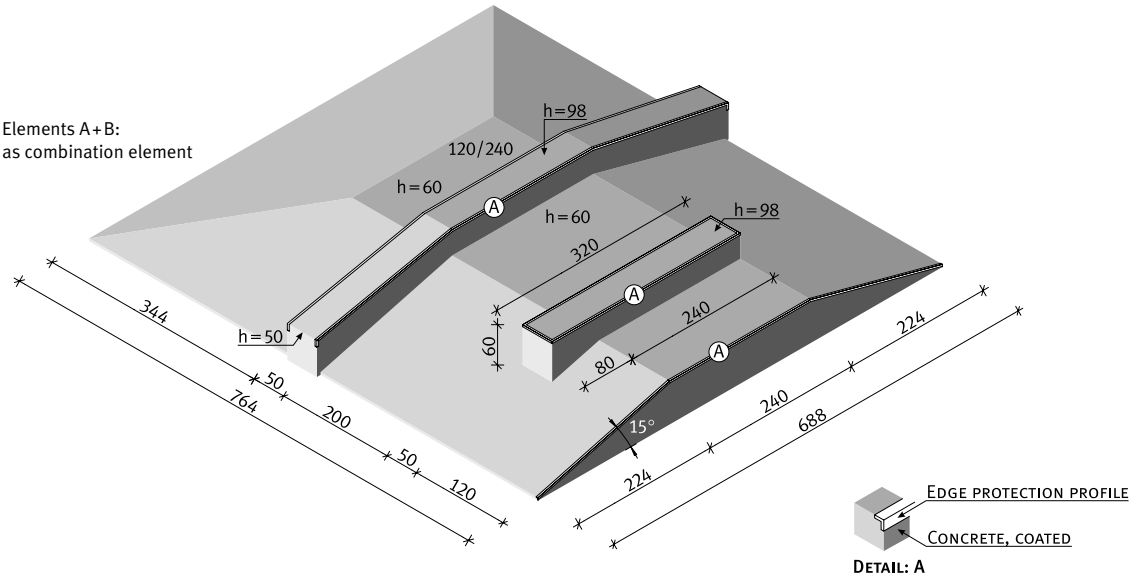

The Stage

B

Prod. Cde.	Length	Width	Height
TS098	1430 cm	1030 cm	40 cm / 60 cm / 98 cm / 140 cm

All dimensions given in standard execution.
Correspondingly larger if equipped with a metal transition sheet.

Visible areas are closed on all sides.

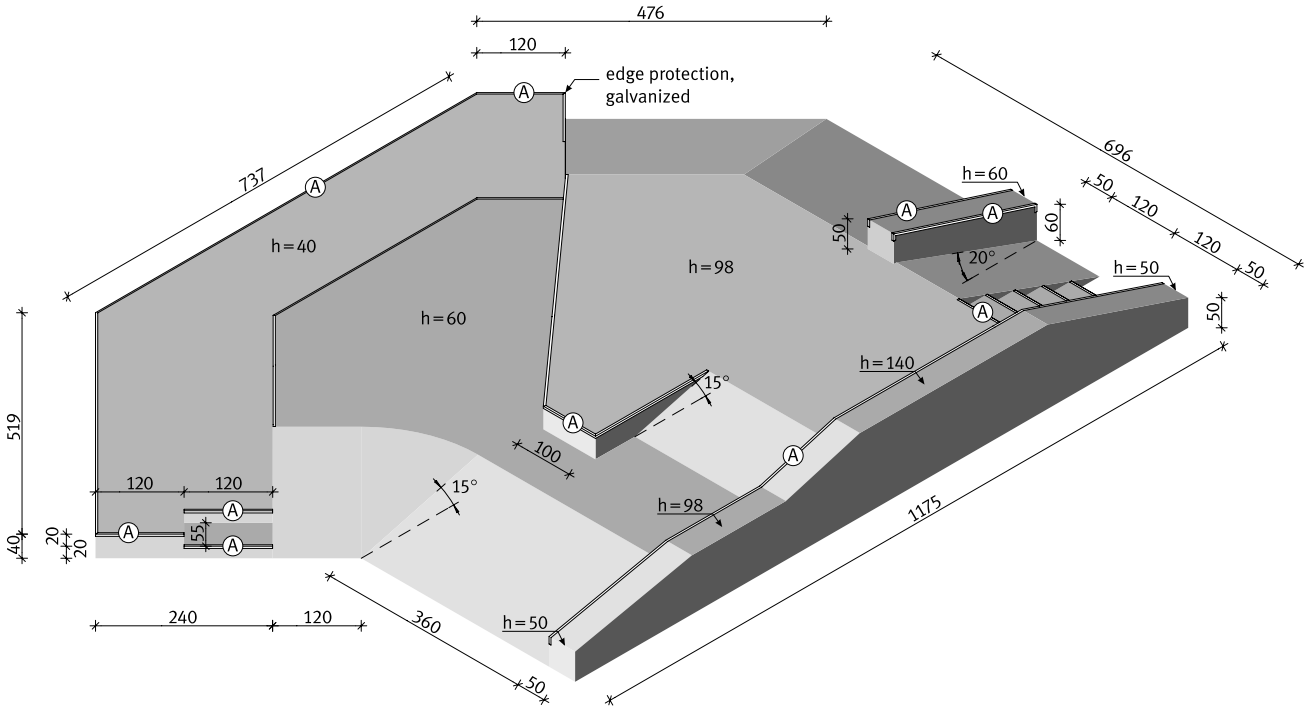

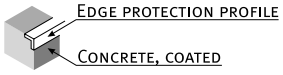

Detail: A

i

Backline_ A backline forms the backbone of a park. Usually it is equipped with quarter ramps and kickers to gain the momentum required to skate the central obstacles (centerpiece, funbox, etc.).

Quarter_ A quarter is a ramp with a radius of a quarter circle. Quarters are installed in almost all skate parks and serve as ramps to build up momentum. However, they are also suitable for many tricks.

Wallride_ Wallrides are vertical areas that are usually linked to the flat by a groove. The wallride's height may vary.

ⓘ EN standard:

In case of a falling height of › 100 cm a falling protection is required. All other run-up and boundary elements from an element height of › 100 cm are only admissible if used with a table.

Run-up and boundary elements are used for the border area and the corners of a skate park. Their design ensures that the skater can take as much momentum with him after a skate trick in the border or corner area as he needs to easily reach the next target. That way the skate flow from ramp to ramp can be kept and remains dynamic. And that is what eventually makes a good skate park. Each of these elements can be skated individually as each is suitable for special tricks. Boundary elements furthermore serve as run-up elements from where to start the course through the skate park.

Individual boundary elements such as banks and quarter pipes can be combined by link elements to form the most diverse variations. That way, new and organic skating landscapes with many bends can be created.

A Hip with ramps

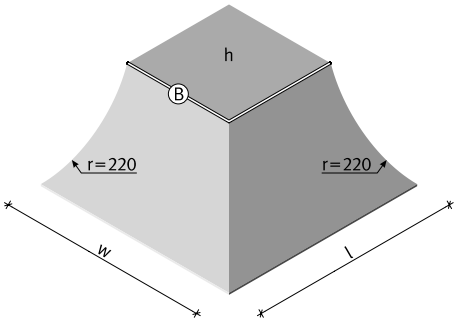

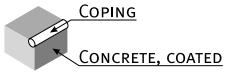

Detail: B

Product Code	Length	Width	Height
FET098	432 cm	432 cm	98 cm
FET120	445 cm	445 cm	120 cm
FET150	457 cm	457 cm	150 cm

All dimensions given in standard execution. Correspondingly larger if equipped with a metal transition sheet.

Visible areas are closed on all sides.
If used as a stand-alone element it is closed on all sides so that it can be kept clean in an ideal way.

B Hip with link edge

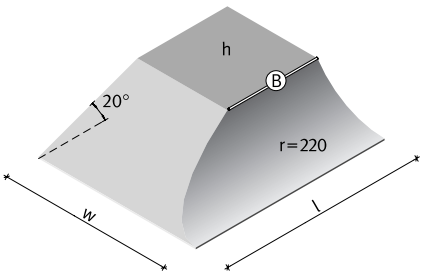

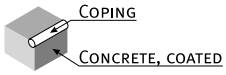

Detail: B

Product Code	Length	Width	Height
FEL098	514 cm	432 cm	98 cm
FEL120	575 cm	445 cm	120 cm
FEL150	652 cm	457 cm	150 cm

All dimensions given in standard execution. Correspondingly larger if equipped with a metal transition sheet.

Visible areas are closed on all sides.
If used as a stand-alone element it is closed on all sides so that it can be kept clean in an ideal way.

New: Hip with banks 15° C

Product Code	Length	Width	Height
FEB60	469 cm	469 cm	60 cm
FEB80	544 cm	544 cm	80 cm

All dimensions given in standard execution. Correspondingly larger if equipped with a metal transition sheet.

Visible areas are closed on all sides.
If used as a stand-alone element it is closed on all sides so that it can be kept clean in an ideal way.

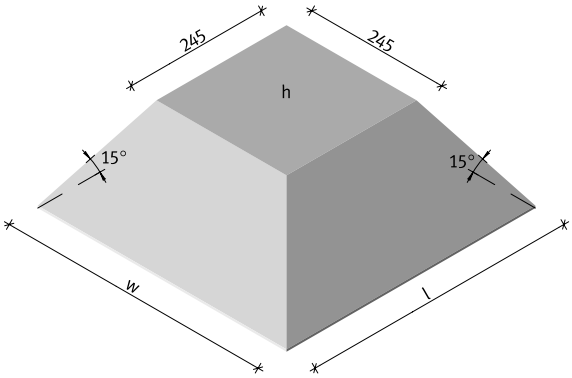

Hip with banks 20° D

Product Code	Length	Width	Height
FEB98	514 cm	514 cm	98 cm
FEB12	575 cm	575 cm	120 cm
FEB15	652 cm	652 cm	150 cm

All dimensions given in standard execution. Correspondingly larger if equipped with a metal transition sheet.

Visible areas are closed on all sides.
If used as a stand-alone element it is closed on all sides so that it can be kept clean in an ideal way.

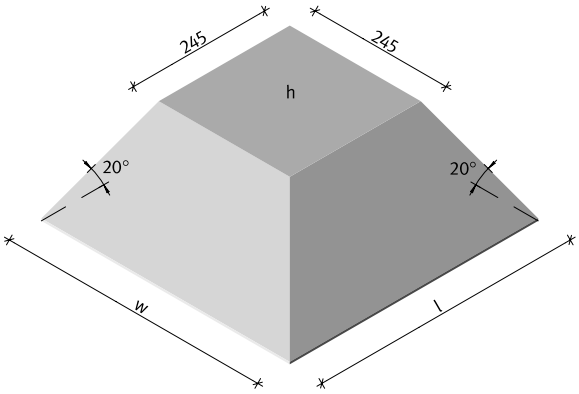

A New: Corner hip

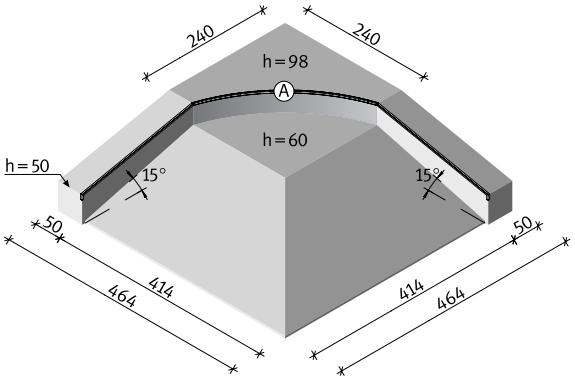

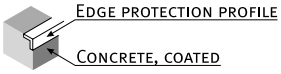

Detail: A

Product Code	Length	Width	Height
CH120	464 cm	464 cm	60 cm / 98 cm

All dimensions given in standard execution. Correspondingly larger if equipped with a metal transition sheet.

Visible areas are closed on all sides.
If used as a stand-alone element it is closed on all sides so that it can be kept clean in an ideal way.

B New: Double hip with curb extension

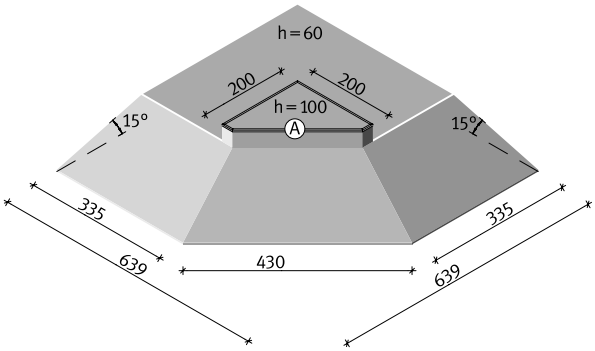

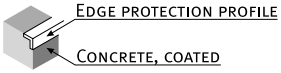

Detail: A

Product Code	Length	Width	Height
DHC01	639 cm	639 cm	60 cm / 100 cm

All dimensions given in standard execution. Correspondingly larger if equipped with a metal transition sheet.

If used as a stand-alone element it is closed on all sides so that it can be kept clean in an ideal way.

Corner bank C

Product Code	Length	Width	Height
D0120	630 cm	480 cm	120 cm

All dimensions given in standard execution. Correspondingly larger if equipped with a metal transition sheet.

Visible areas are closed on all sides.
As a stand-alone element it is closed on all sides so that it can be kept clean in an ideal way.

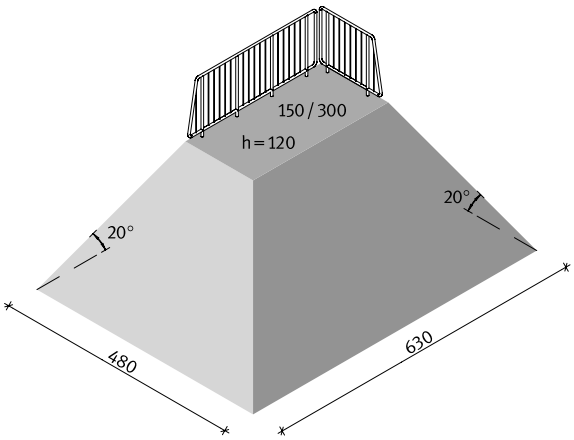

Gap pyramid D

Product Code	Length	Width	Height
GPY15	542 cm	542 cm	80 cm / 150 cm
GPY20	632 cm	632 cm	120 cm / 200 cm

All dimensions given in standard execution. Correspondingly larger if equipped with a metal transition sheet.

Visible areas are closed on all sides.
As a stand-alone element it is closed on all sides so that it can be kept clean in an ideal way.

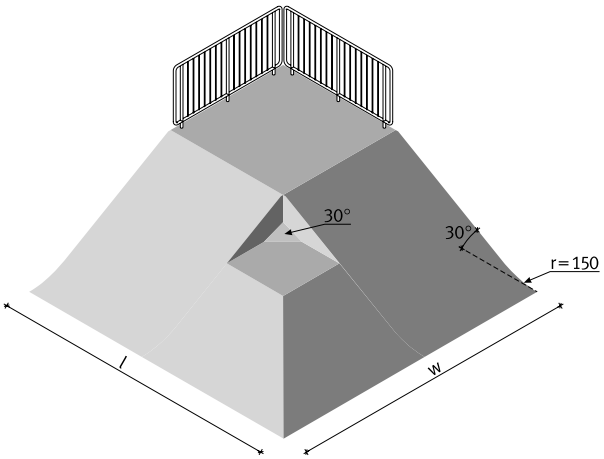

A Kingsize bank 20°

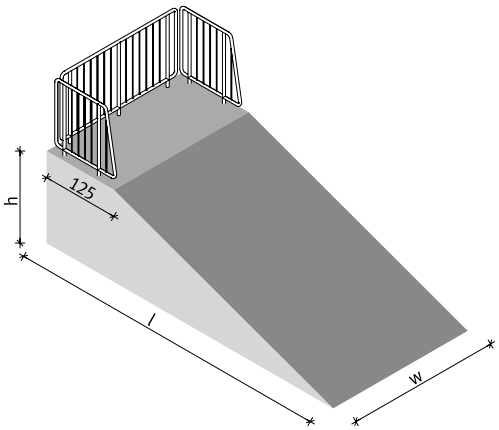

Product Code	Length	Width	Height
BM198	394 cm	240 cm	98 cm
BM120	455 cm	240 cm	120 cm
BM150	532 cm	240 cm	150 cm
BM298	394 cm	360 cm	98 cm
BM220	455 cm	360 cm	120 cm
BM250	532 cm	360 cm	150 cm
BM200	675 cm	360 cm	200 cm

All dimensions given in standard execution. Correspondingly larger if equipped with a metal transition sheet.

As a stand-alone element it is closed on all sides so that it can be kept clean in an ideal way.

B Kingsize bank 35°

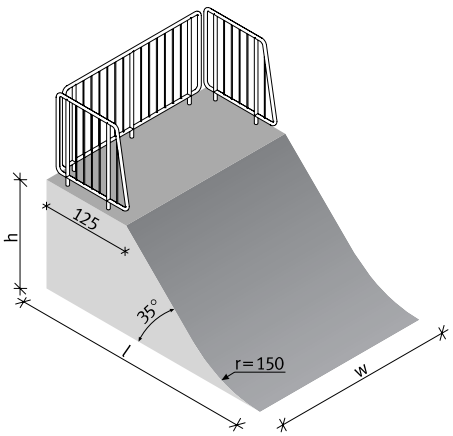

Product Code	Length	Width	Height
BM398	312 cm	240 cm	98 cm
BM320	344 cm	240 cm	120 cm
BM350	384 cm	240 cm	150 cm
BM498	312 cm	360 cm	98 cm
BM420	344 cm	360 cm	120 cm
BM450	384 cm	360 cm	150 cm
BM400	458 cm	360 cm	200 cm

All dimensions given in standard execution. Correspondingly larger if equipped with a metal transition sheet.

As a stand-alone element it is closed on all sides so that it can be kept clean in an ideal way.

Kingsize speedramp C

Product Code	Length	Width	Height
SK2198	312 cm	240 cm	98 cm
SK2120	344 cm	240 cm	120 cm
SK2150	384 cm	240 cm	150 cm
SK3198	312 cm	360 cm	98 cm
SK3120	344 cm	360 cm	120 cm
SK3150	384 cm	360 cm	150 cm
SK3200	458 cm	360 cm	200 cm

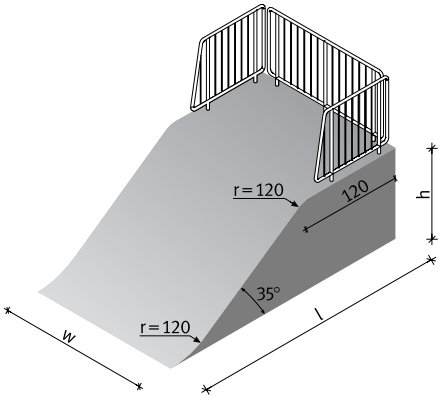

All dimensions given in standard execution. Correspondingly larger if equipped with a metal transition sheet.

As a stand-alone element it is closed on all sides so that it can be kept clean in an ideal way.

Quarterpipe D

Product Code	Length	Width	Height
Q2198	333 cm	240 cm	98 cm
Q2120	346 cm	240 cm	120 cm
Q2150	358 cm	240 cm	150 cm
Q3198	333 cm	360 cm	98 cm
Q3120	346 cm	360 cm	120 cm
Q3150	358 cm	360 cm	150 cm
Q3180	366 cm	360 cm	180 cm
Q3200	369 cm	360 cm	200 cm

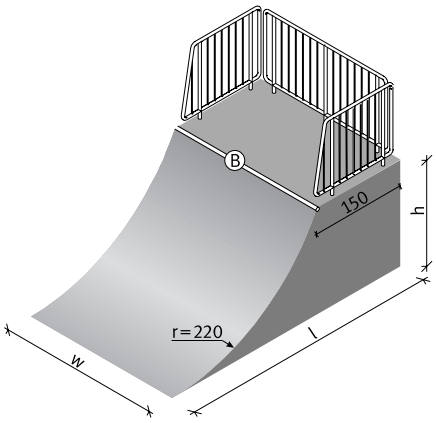

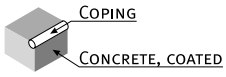

Detail: B

All dimensions given in standard execution. Correspondingly larger if equipped with a metal transition sheet.

As a stand-alone element it is closed on all sides so that it can be kept clean in an ideal way.

A New: Quarterpipe + kingsize bank 35°

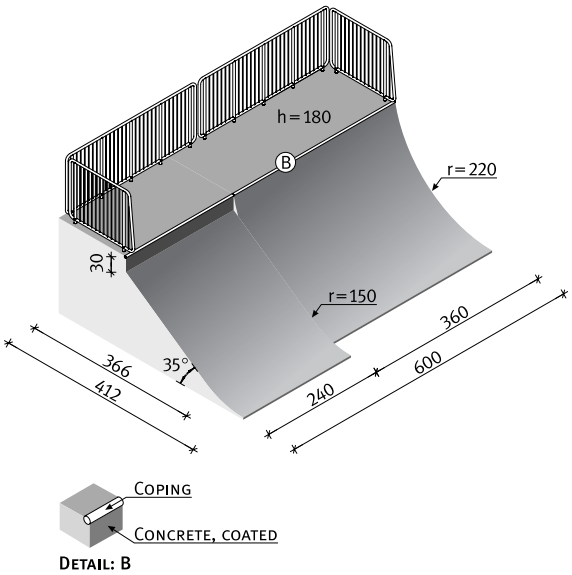

Product Code	Length	Width	Height
QBK18	412 cm	600 cm	180 cm

All dimensions given in standard execution. Correspondingly larger if equipped with a metal transition sheet.

As a stand-alone element it is closed on all sides so that it can be kept clean in an ideal way.

B Gap ramp

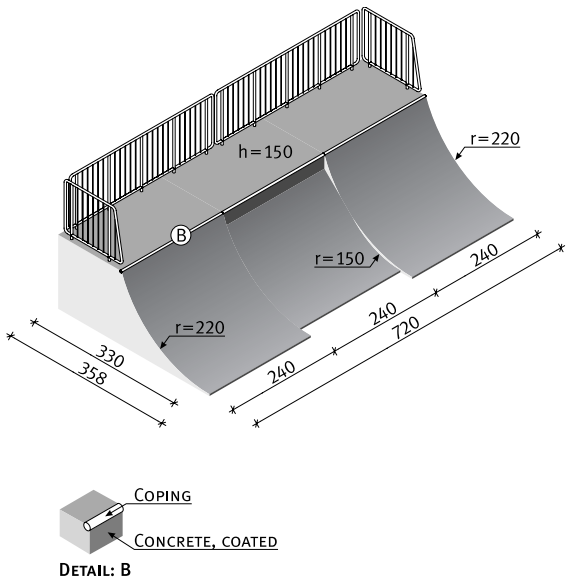

Product Code	Length	Width	Height
GP150	358 cm	720 cm	150 cm

All dimensions given in standard execution. Correspondingly larger if equipped with a metal transition sheet.

As a stand-alone element it is closed on all sides so that it can be kept clean in an ideal way.

New: Curb hip C

Product Code	Length	Width	Height
CHI12	1055 cm	632 cm	120 cm

All dimensions given in standard execution.
Correspondingly larger if equipped with a metal transition sheet.

As a stand-alone element it is closed on all sides so that it can be kept clean in an ideal way.

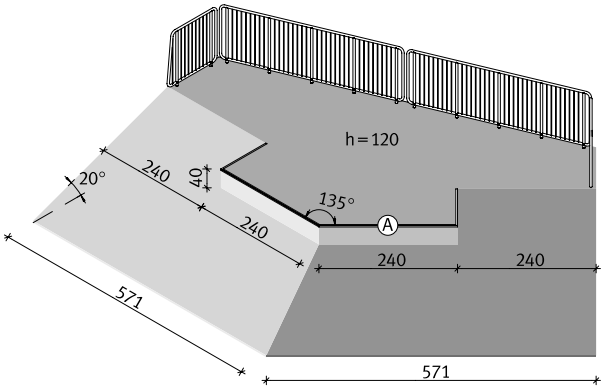

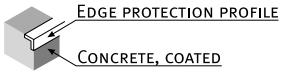

Detail: A

Kicker bank D

Product Code	Length	Width	Height
KB150	457 cm	600 cm	150 cm
KB200	515 cm	600 cm	200 cm

All dimensions given in standard execution. Correspondingly larger if equipped with a metal transition sheet.

As a stand-alone element it is closed on all sides so that it can be kept clean in an ideal way.

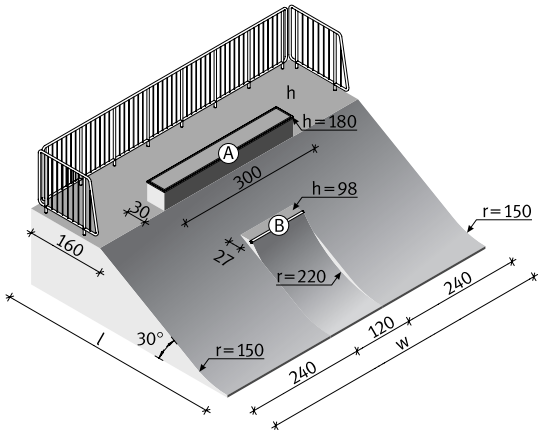

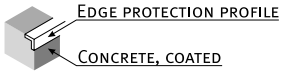

Detail: A

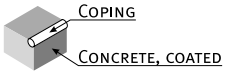

Detail: B

A New: Bank with extension

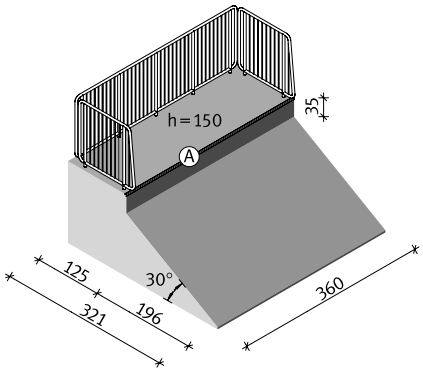

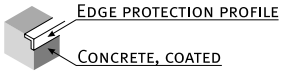

Detail: A

Product Code	Length	Width	Height
BEX50	321 cm	360 cm	150 cm

All dimensions given in standard execution. Correspondingly larger if equipped with a metal transition sheet.

As a stand-alone element it is closed on all sides so that it can be kept clean in an ideal way.

B Bank to wall

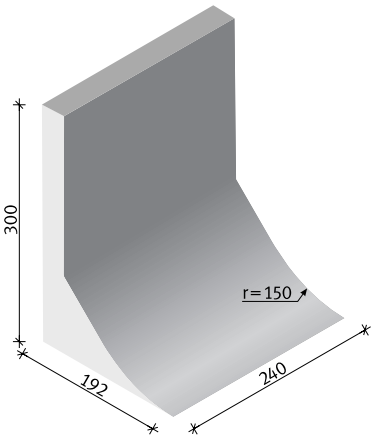

Product Code	Length	Width	Height
BW150	192 cm	240 cm	300 cm

All dimensions given in standard execution. Correspondingly larger if equipped with a metal transition sheet.

As a stand-alone element it is closed on all sides so that it can be kept clean in an ideal way.

Wallride C

Product Code	Length	Width	Height
WR150	265 cm	240 cm	400 cm

All dimensions given in standard execution. Correspondingly larger if equipped with a metal transition sheet.

As a stand-alone element it is closed on all sides so that it can be kept clean in an ideal way.

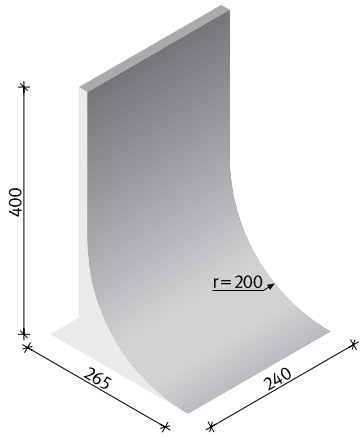

Pool wallride D

Product Code	Length	Width	Height
PWR15	985 cm	985 cm	400 cm

Only available in standard execution.

As a stand-alone element it is closed on all sides so that it can be kept clean in an ideal way.

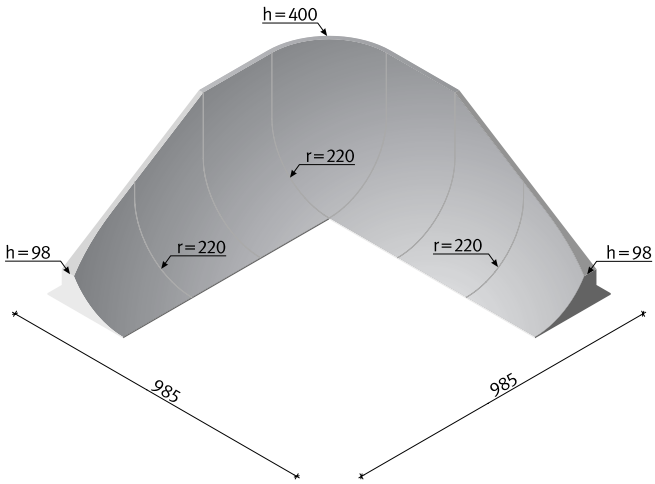

A New: Bank extension corner

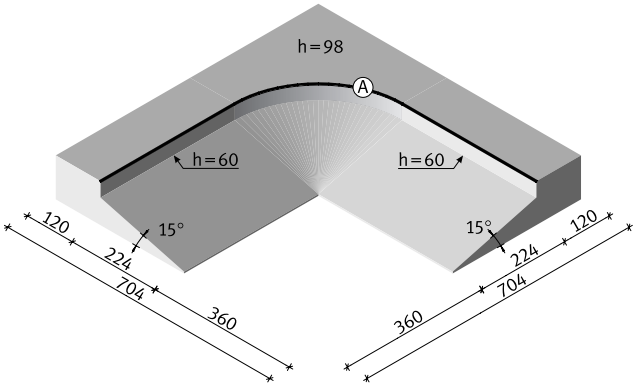

Product Code	Length	Width	Height
BEC01	704 cm	704 cm	60 cm / 98 cm

All dimensions given in standard execution. Correspondingly larger if equipped with a metal transition sheet.

As a stand-alone element it is closed on all sides so that it can be kept clean in an ideal way.

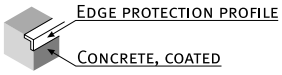

Detail: A

B New: Pool corner with table

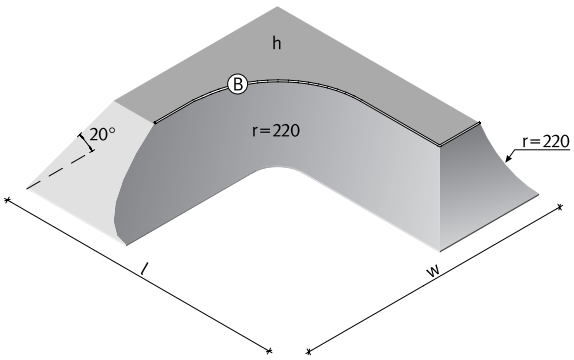

Product Code	Length	Width	Height
PET980	839 cm	791 cm	98 cm
PET981	1009 cm	1074 cm	148 cm

All dimensions given in standard execution. Correspondingly larger if equipped with a metal transition sheet.

As a stand-alone element it is closed on all sides so that it can be kept clean in an ideal way.

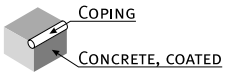

Detail: B

Entry C

Product Code	Length	Width	Height
EN200	852 cm	741 cm	148 cm

Only available in standard execution.

This is a suggestion of how the entrance area of a skate park may be designed.
The elements can be tailor-made to suit the conditions on site.

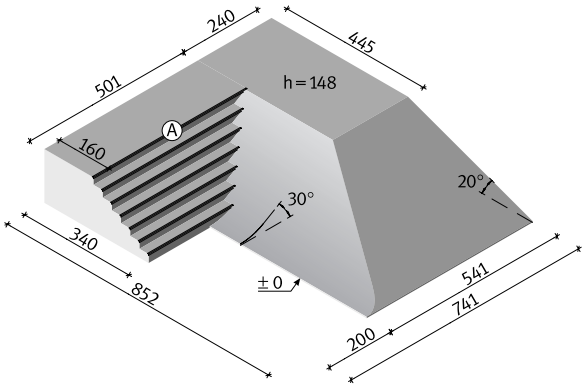

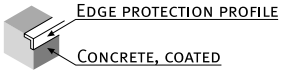

Detail: A

New: Double bank with ledge and rail D

Product Code	Length	Width	Height
DBL120	653 cm	680 cm	60 cm / 120 cm

All dimensions given in standard execution.
Correspondingly larger if equipped with a metal transition sheet.

Only possible in connection with a platform.

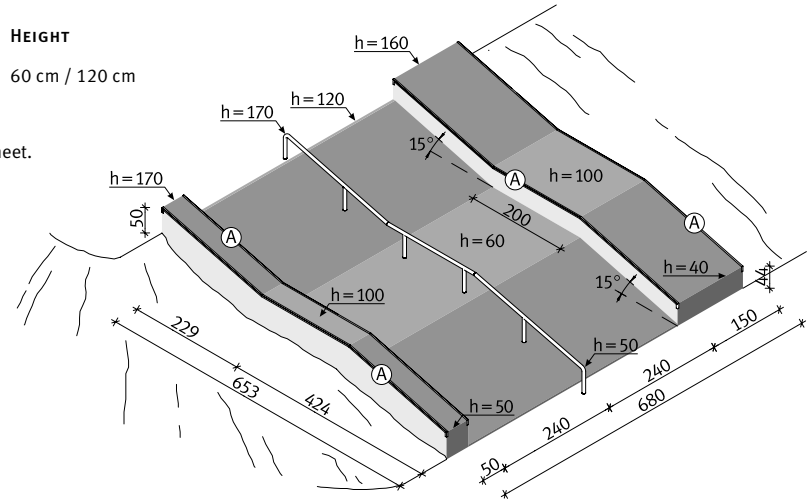

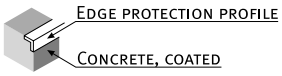

Detail: A

A New: Corner bank combi

Product Code	Length	Width	Height
CBC01	2020 cm	1100 cm	80 cm / 120 cm / 130 cm

All dimensions given in standard execution.
Correspondingly larger if equipped with a metal transition sheet.

Platform to be provided by customer.

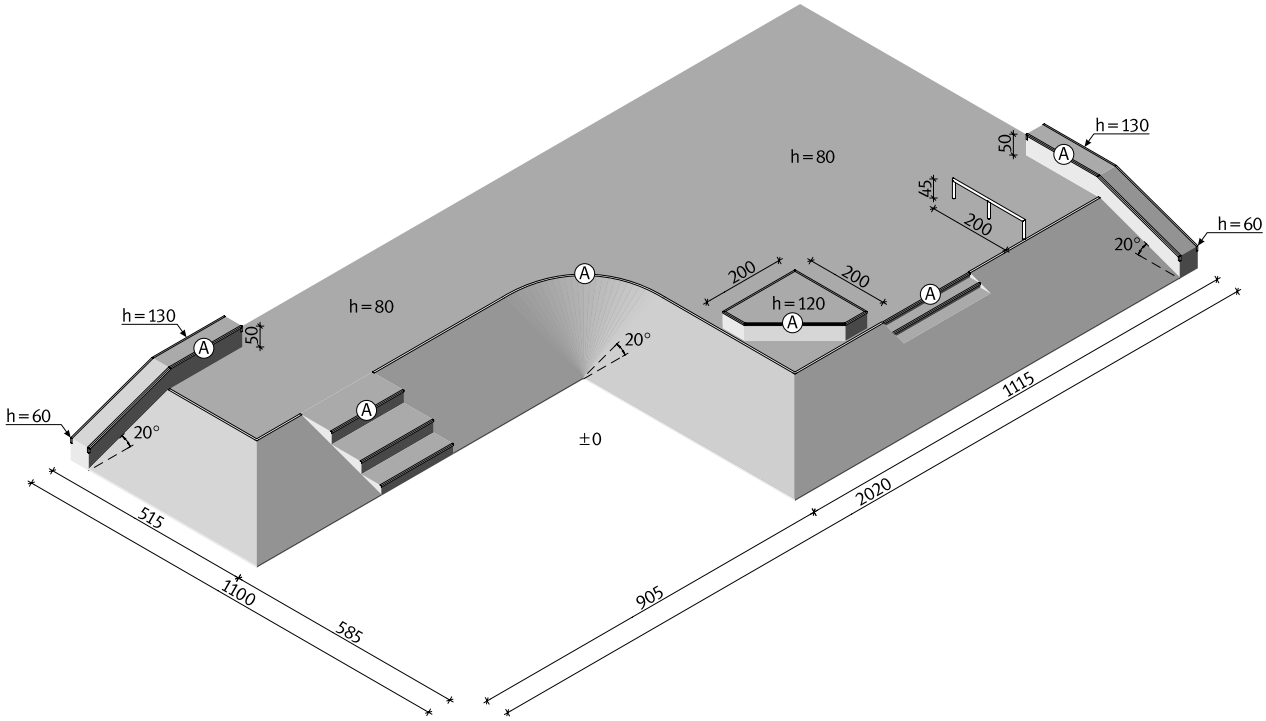

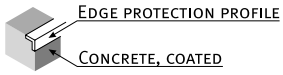

Detail: A

New: Mellow ramp corner with London Gap

B

Product Code	Length	Width	Height
HRL01	1551 cm	394 cm	60 cm / 98 cm

Only available in standard execution.

As a stand-alone element it is closed on all sides so that it can be kept clean in an ideal way.

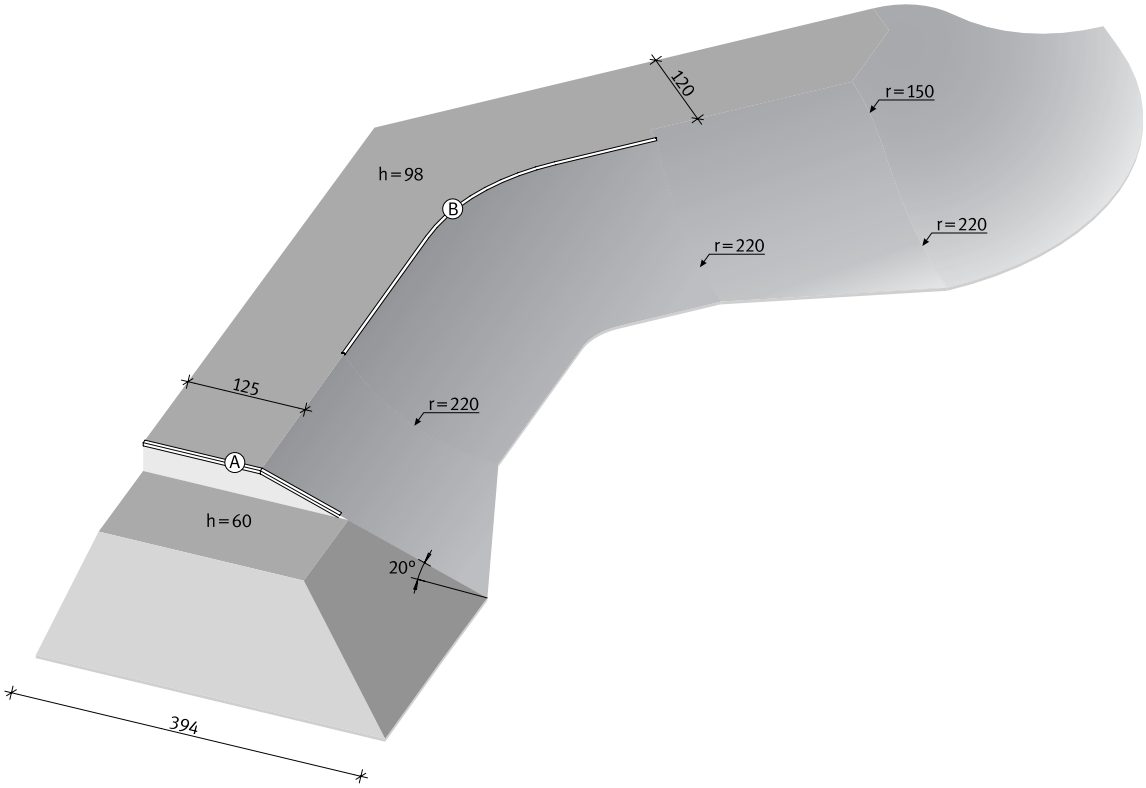

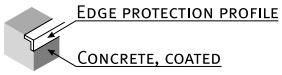

Detail: A

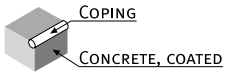

Detail: B

i

A **miniramp** is a bended ramp with a platform on both sides. By skating this ramp up and down you can make tricks on the coping tube. A miniramp may only be skated by one person only at a time. It may either be put on a surface or installed. Similar to pools & ramps up to a height of 2 m, which are also called miniramps. The ramp should be of sufficient width to ensure safe skating. This shall be considered during the selection process. Depending on the platform's height a miniramp may even be wider than 10 m. On the following pages you will find some examples.

(!) EN standard:
As per the EN standard all miniramps and halfpipes have a safety distance of 2 m on the sides only.

A **halfpipe** is similar to a miniramp. The only difference is its height. Usually a halfpipe has a height of at least 3 m. With regard to its width it should be considered to make it at least 7.2 m wide to ensure safe skating. With both, the halfpipe and the miniramp one can play around with different platform heights. That way options are created for all kinds of users. A halfpipe is only reasonable if there are enough users who are able to skate such a height.

A Bowl

Product Code	Length	Width	Height
BL180	1232 cm	1232 cm	180 cm
BL330	1414 cm	1414 cm	330 cm

Bowl dimensions are in each case consistent with the basic module.

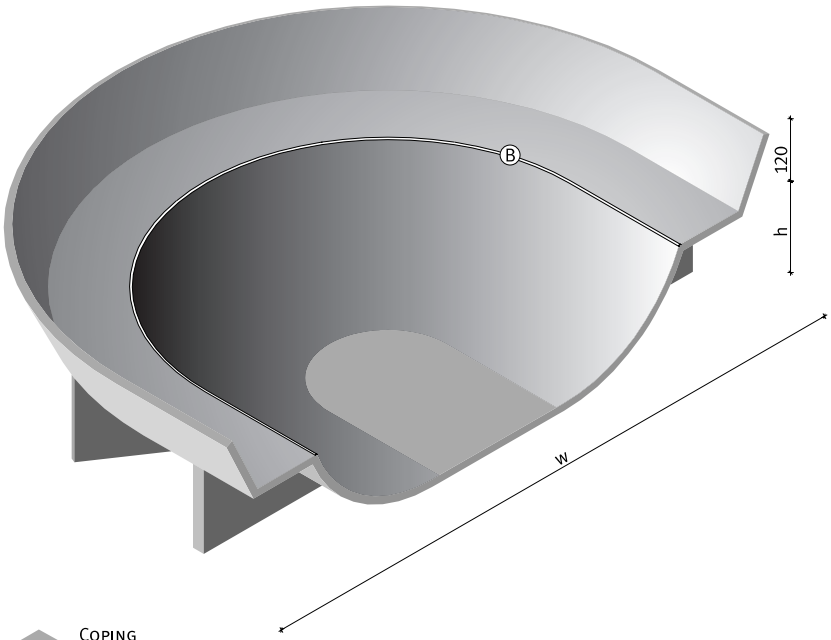

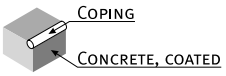

Detail: B

Miniramps - Halfpipe

B

Product Code	Length	Width	Height
HR150	1205 cm	480 cm	150 cm
HR180	1232 cm	480 cm	180 cm
HR250	1300 cm	480 cm	250 cm
HR151	1205 cm	600 cm	150 cm
HR181	1232 cm	720 cm	180 cm
HR251	1300 cm	720 cm	250 cm
HR330	1414 cm	720 cm	330 cm
HR331	1414 cm	960 cm	330 cm
HR15P	1205 cm	360 cm	150 cm
HR18P	1232 cm	360 cm	180 cm

For HR150, HR180, HR 250 four supporting structures or wall disks each are required; for HR 330 six each, and for HR15P and HR18P two each (see page 117).

Modular dimension for the basic module is a width of 240 cm each (360 cm for HR15P and HR18P).

All basic modules can be extended on both sides. The minimum widths for the corresponding building heights for individual elements shall be met as stipulated by EN 14974:2006.

h smaller than /equal to 125 cm w/min = 240 cm
h bigger than 125 cm w/min = 260 cm

Element also available in an execution closed on all sides.

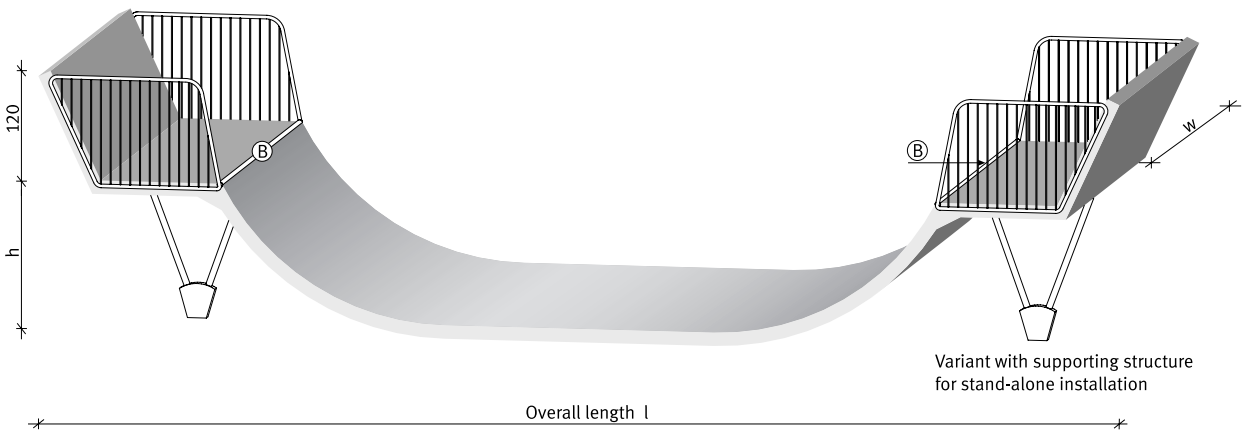

Variant with supporting structure for stand-alone installation

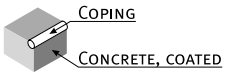

Detail: B

A Miniramp corner

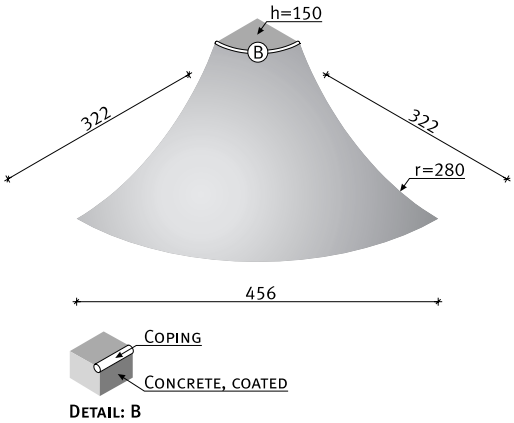

Product Code	Height
MC150	150 cm
MC180	180 cm

Element available in standard execution only and without metal transition sheet.

Element serves as a connection element between a miniramp and a quarter pipe.

B New: Miniramp with extension, sub-box and elevator

Product Code	Length	Width	Height
HRE180	1135 cm	960 cm	180 cm / 220 cm / 250 cm

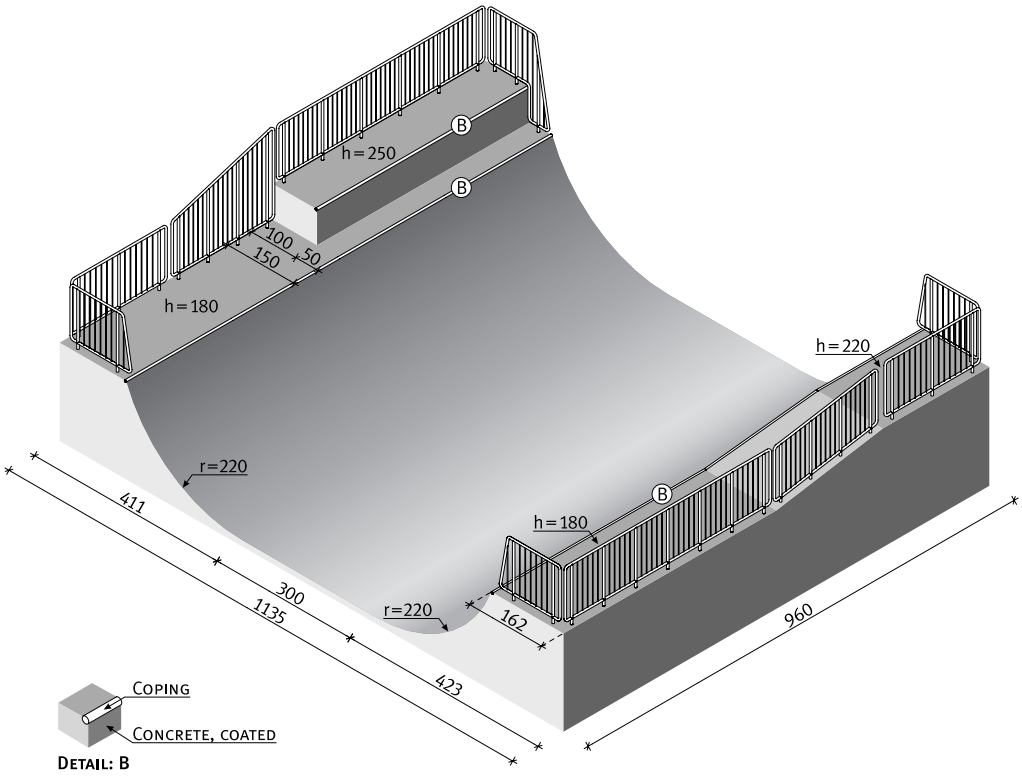

Supporting structure/wall disks C

Product Code	Description
SK001	Supporting structure
WS001	Wall disks

SK001 – Supporting structure
In galvanized execution. For a stand-alone installation one supporting structure per module is required on each side.

WS001 – Wall disks
For a stand-alone or earth installation one wall disk per basic module is required on each side.

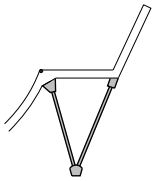

Supporting structure

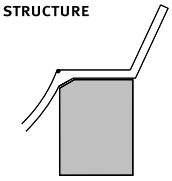

Wall disk

New: Miniramp with roll-in D

Product Code	Length	Width	Height
HRR150	1016 cm	1080 cm	150 cm / 200 cm

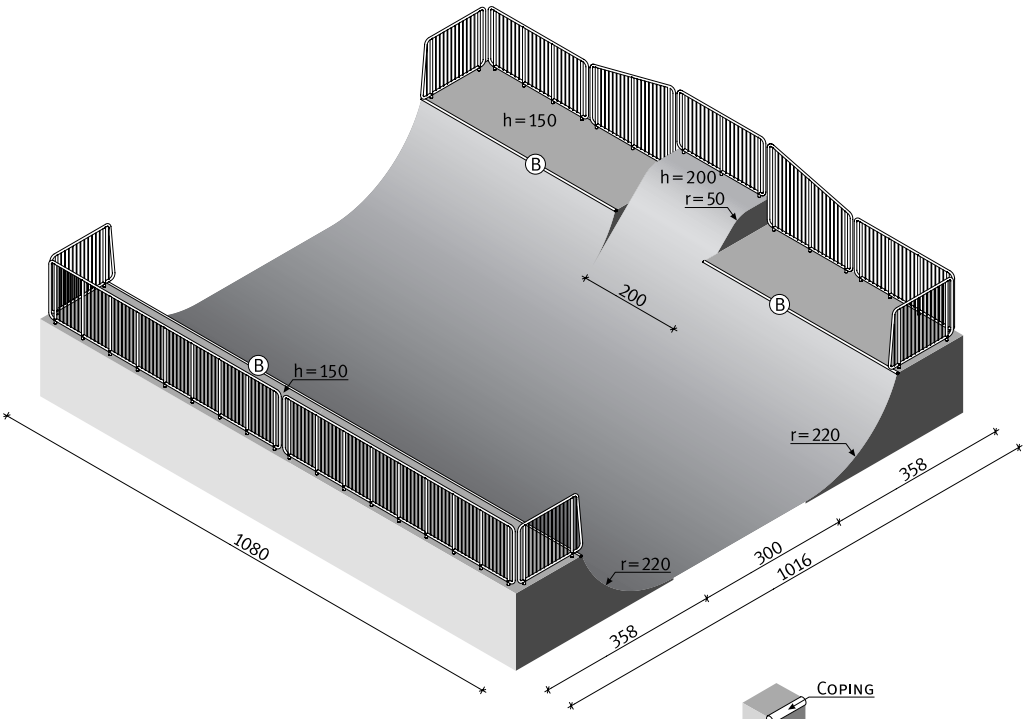

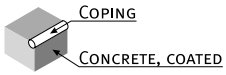

Detail: B

i

Loveseat_ A ledge in the pool slightly below the coping; the place in a swimming pool where people can rest. In skatable pools the loveseat does not invite to linger, however, but to make various tricks.

Pool/bowl_ Pool skating is one of the original forms of skateboarding and originated in California where skateboarders were in search of ever new challenges by skating in dried-up swimming pools. Pools are still a relatively rare sight in Europe, even though they are equally suitable for all kinds of roller sports and age groups and offer a lot of skating fun.

Poolskating is the one and only cross-generation discipline with regard to skating. Quite often father and son can be seen skating in the same pool. This is possible, if the father had visited the USA in the late 70s, for example, as this was the place where the idea of skating a pool was created in old and empty swimming pools of which bored young people took advantage. Shortly afterwards concrete pools sprang up like mushrooms, but it was not before the late 80s that this discipline made its way across the sea to Europe. In Germany pool skating has been popular for a relatively short time only and now also municipalities are interested in it. However, it is established already now so that more and more fathers can go skating with their sons.

A **New:** Pool with volcano hip 01

Product Code	Length	Width	Height
PVH01	1469 cm	804 cm	-148 cm

Only available in standard execution.

Flat of concrete and drainage to be provided by customer.
In case of an earth installation customer has to provide concreting at the rear side against the element.

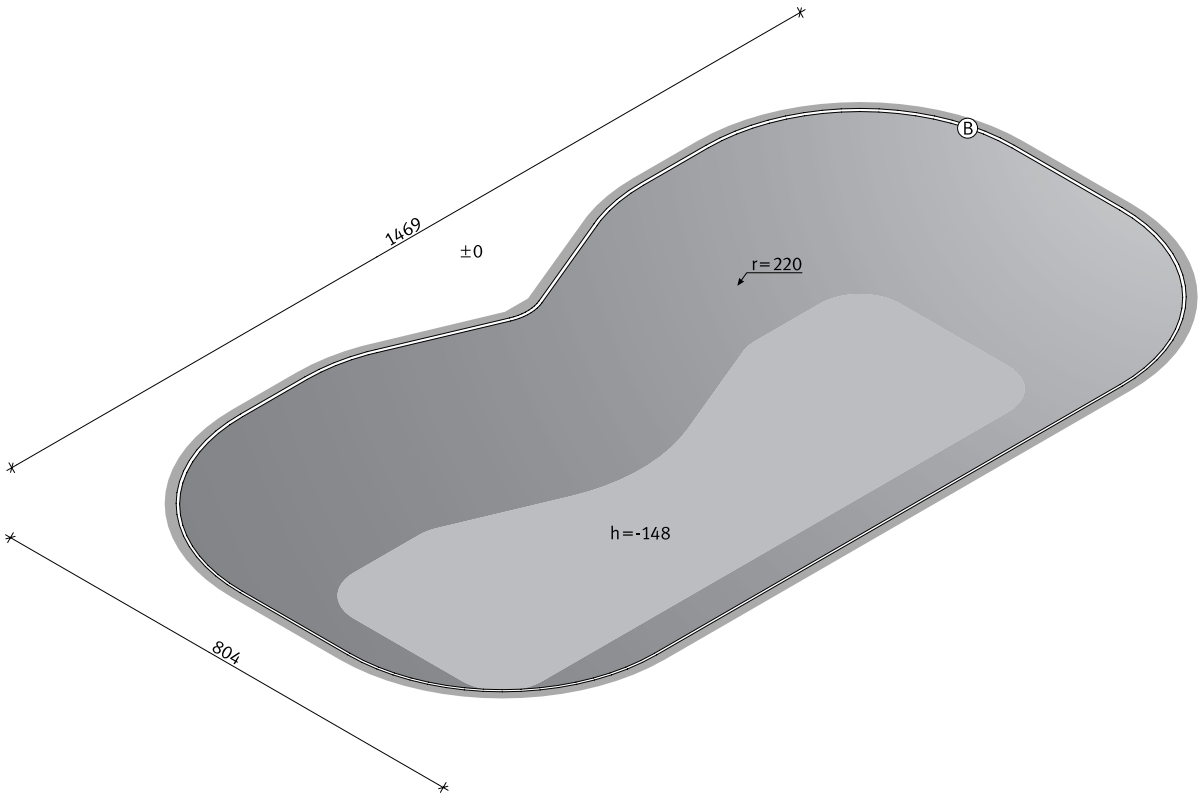

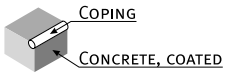

Detail: B

New: Pool with volcano hip 02

B

Product Code	Length	Width	Height
PVH02	2145 cm	754 cm	-148 cm

Only available in standard execution.

Flat of concrete and drainage to be provided by customer.
In case of an earth installation customer has to provide concreting at the rear side against the element.

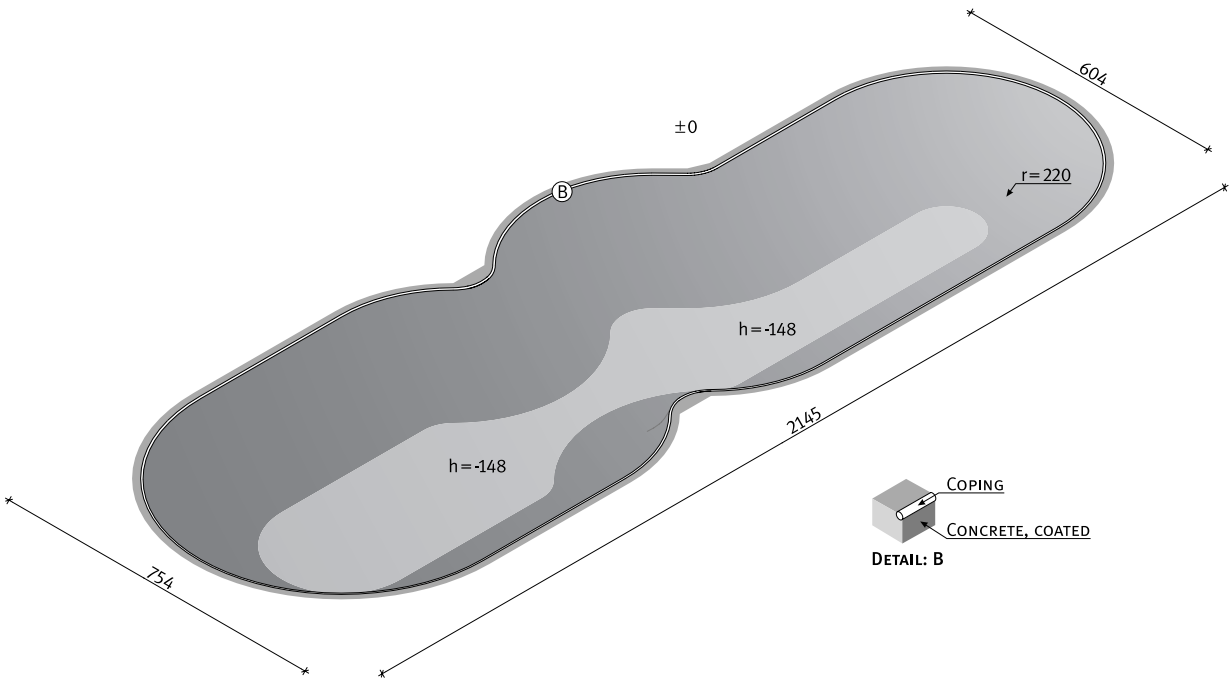

A **New:** Pool with hip

Product Code	Length	Width	Height
PMH01	1163 cm	964 cm	-148 cm

Only available in standard execution.

Flat of concrete and drainage to be provided by customer.
In case of an earth installation customer has to provide concreting at the rear side against the element.

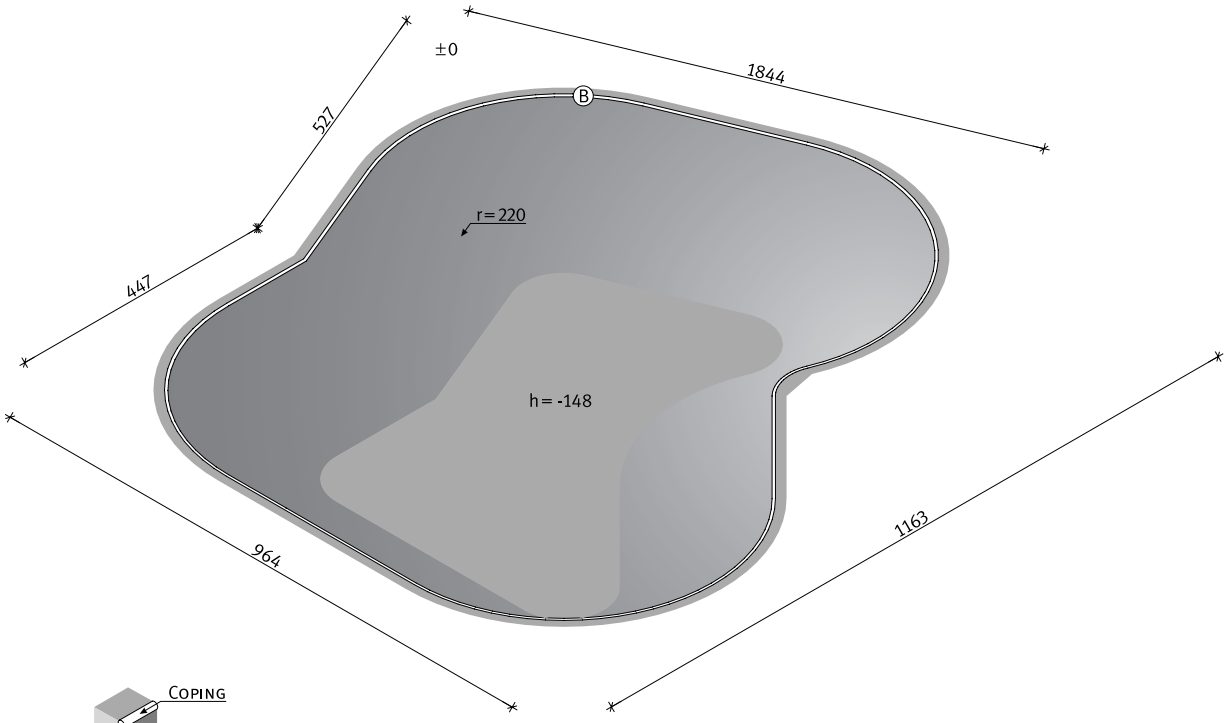

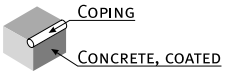

Detail: B

New: Pool with deep and low end

B

Product Code	Length	Width	Height
PDL01	1325 cm	1048 cm	-200 cm / -148 cm

Only available in standard execution.

Flat of concrete and drainage to be provided by customer.
In case of an earth installation customer has to provide concreting at the rear side against the element.

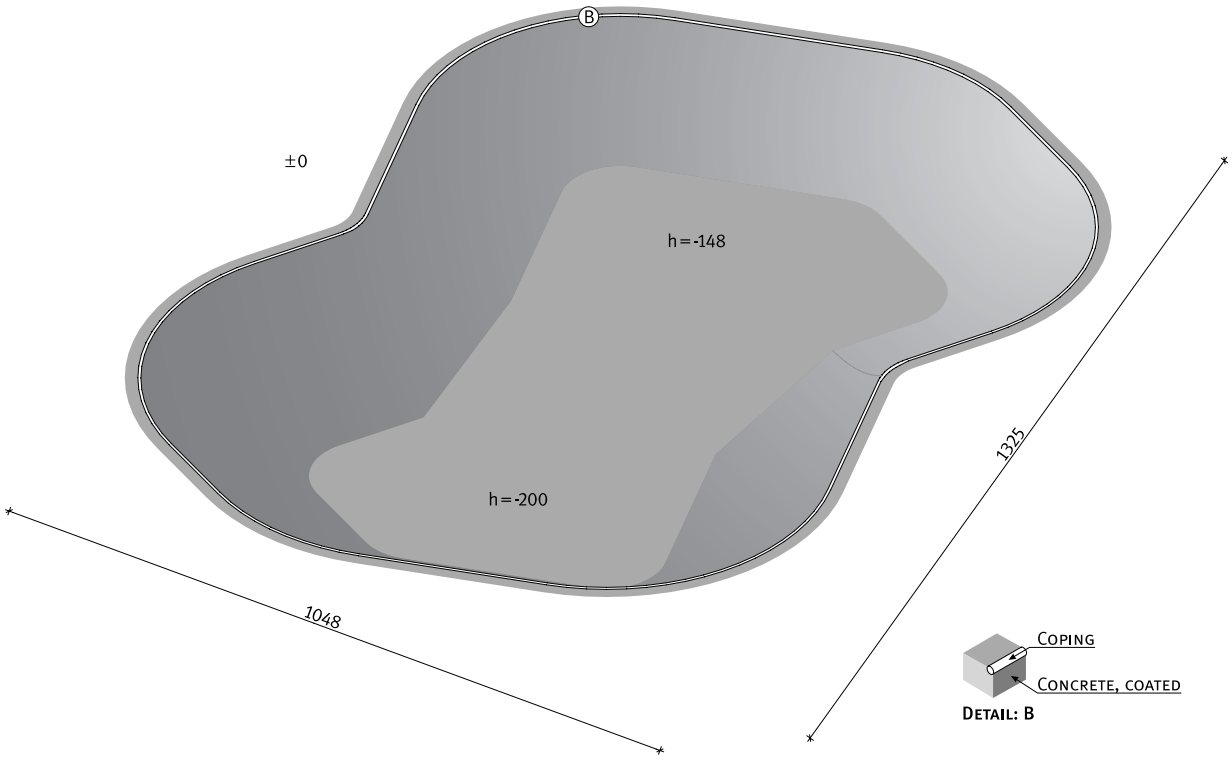

A New: Pool with mellow elevator

Product Code	Length	Width	Height
PME01	1469 cm	804 cm	-148 cm / 52 cm

Only available in standard execution.

Flat of concrete and drainage to be provided by customer.
In case of an earth installation customer has to provide concreting at the rear side against the element.

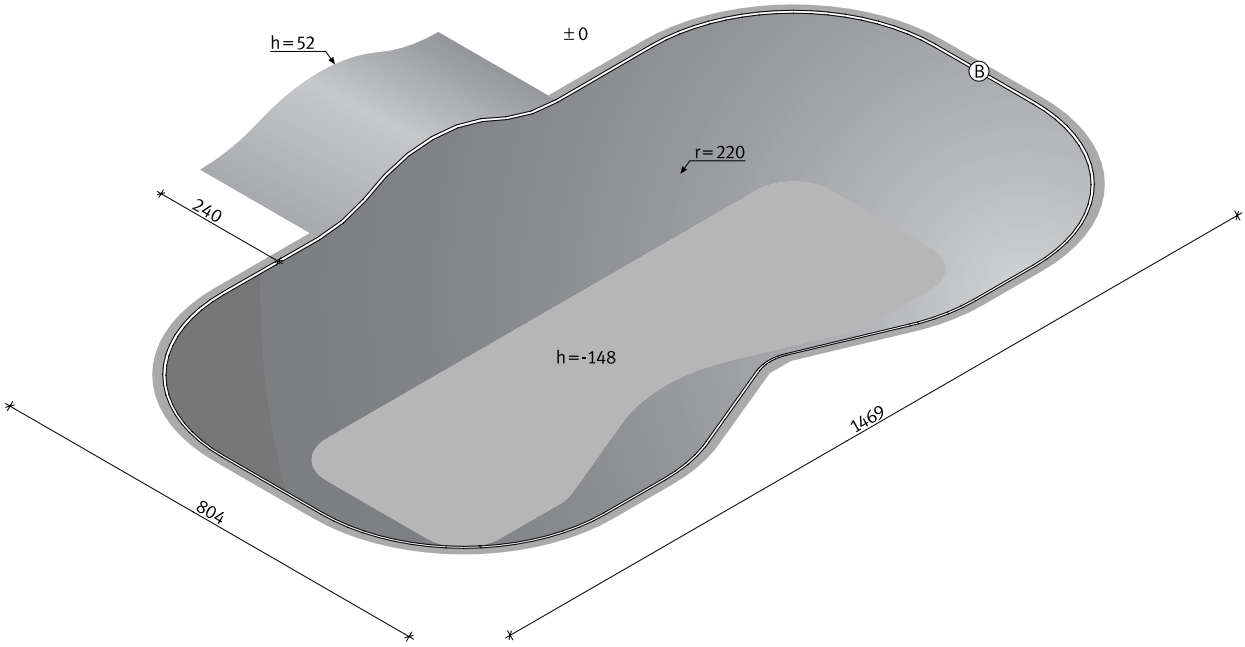

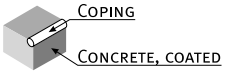

Detail: B

New: Pool with elevator

B

Product Code	Length	Width	Height
POE01	1353 cm	1013 cm	-148 cm / 52 cm / 98 cm

Only available in standard execution.

Flat of concrete and drainage to be provided by customer.
In case of an earth installation customer has to provide concreting at the rear side against the element.

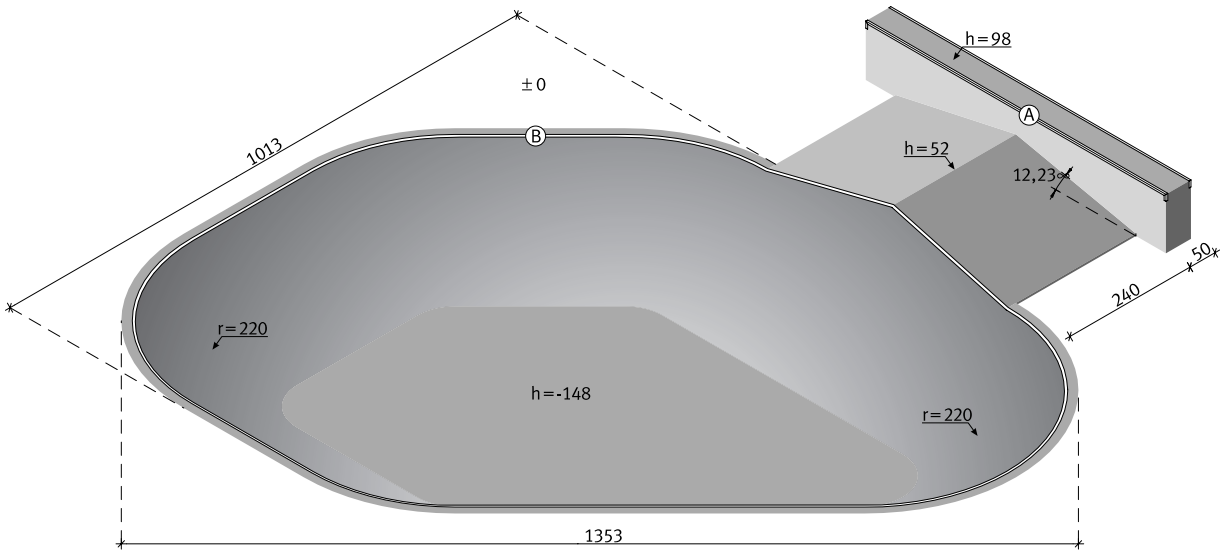

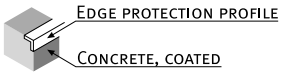

Detail: A

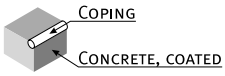

Detail: B

A Mellow bowl

Product Code	Length	Width	Height
MB012	1106 cm	1106 cm	-120 cm

Only available in standard execution.

Flat of concrete and drainage to be provided by customer.
Mellow bowl element h = 120 cm for earth installation: customer has to provide concreting at the rear side against the element.

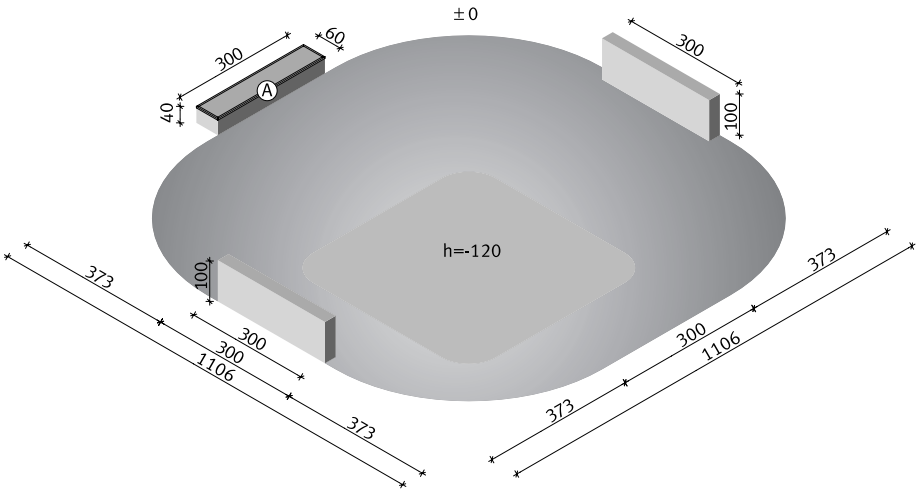

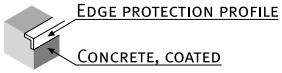

Detail: A

Heart bowl B

Product Code	Length	Width	Height
KSB01	1417 cm	1102 cm	-150 cm/-200 cm
KSB02	1422 cm	1088 cm	-150 cm/-200 cm

Only available in standard execution.

Flat of concrete and drainage to be provided by customer.
In case of an earth installation customer has to provide concreting at the rear side against the element.

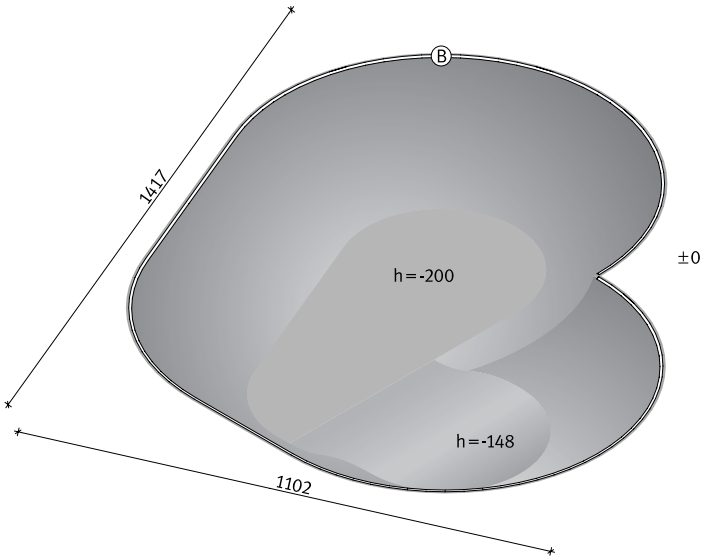

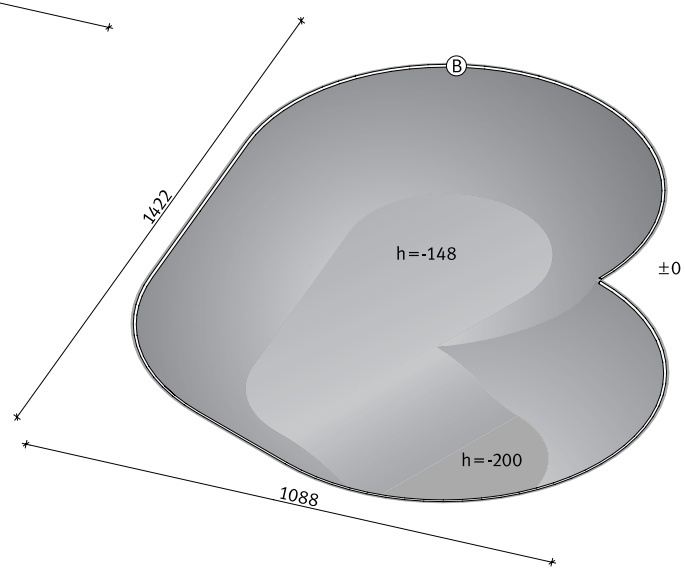

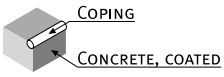

Detail: B

A **New:** Pool with deep end hip, extension and sub-box

Product Code	Length	Width	Height
PDE01	1562 cm	1446 cm	-200 cm/-148 cm /98 cm

Only available in standard execution.

Flat of concrete and drainage to be provided by customer.
In case of an earth installation customer has to provide concreting at the rear side against the element.

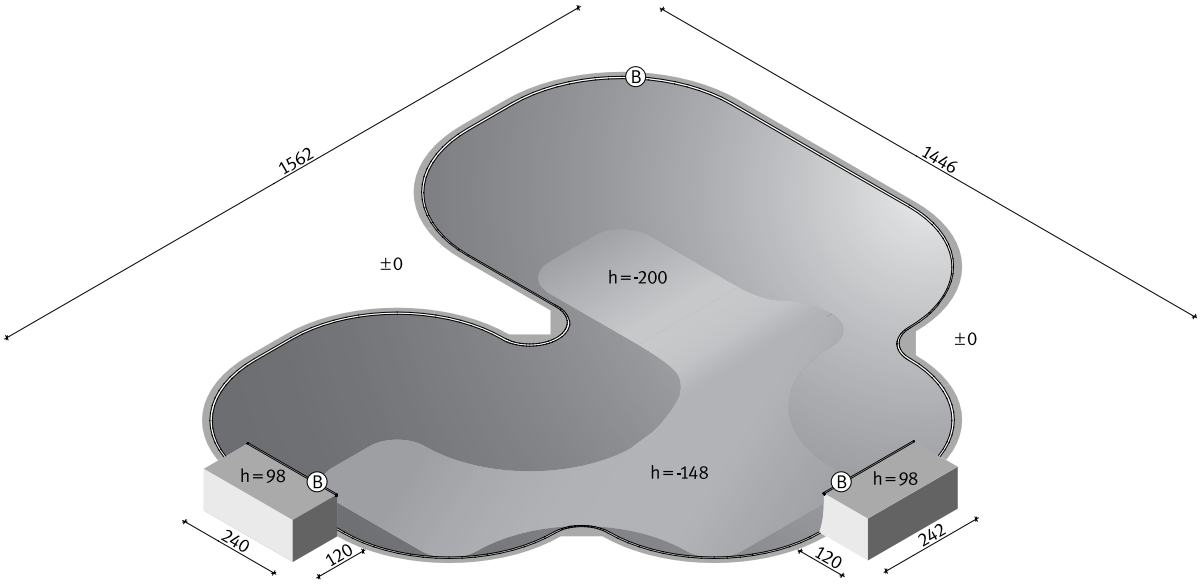

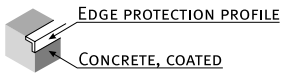

Detail: A

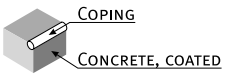

Detail: B

New: Pool with deep end, extension and sub-box

B

Product Code	Length	Width	Height
PDE02	1812 cm	1560 cm	-200 cm / -148 cm / 98 cm

Only available in standard execution.

Flat of concrete and drainage to be provided by customer.
In case of an earth installation customer has to provide concreting at the rear side against the element.

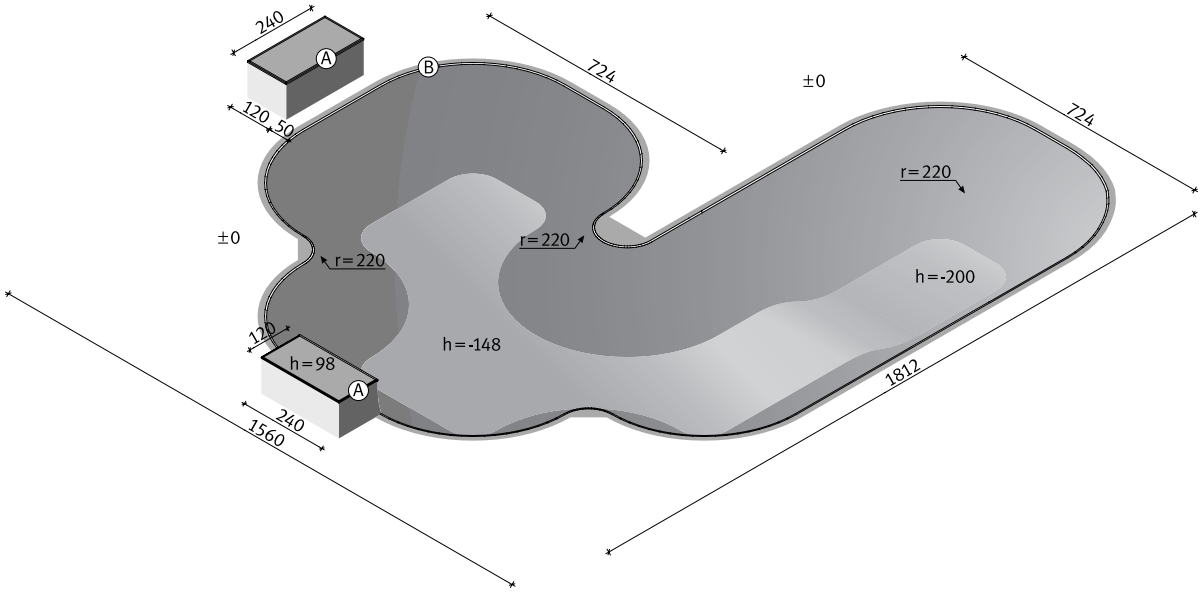

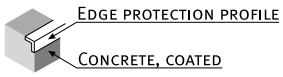

Detail: A

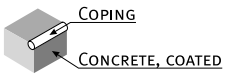

Detail: B

A **New:** Pool with volcano waterfall, deep end, elevator and visor

Product Code	Length	Width	Height
PWE01	2021 cm	1607 cm	-200 cm/-148 cm /98 cm

Only available in standard execution.

Flat of concrete and drainage to be provided by customer.
In case of an earth installation customer has to provide concreting at the rear side against the element.

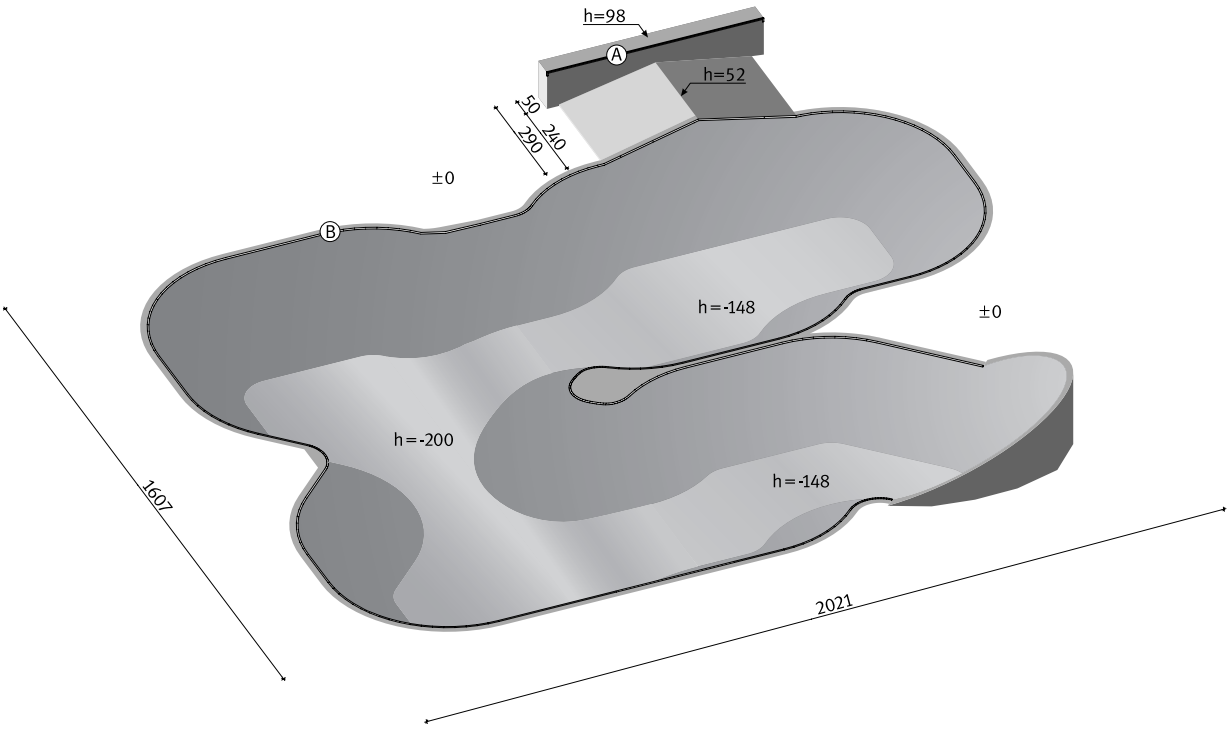

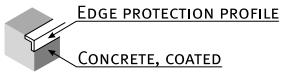

Detail: A

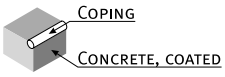

Detail: B

New: Pool with volcano waterfall, deep end and visor

B

Product Code	Length	Width	Height
PWE02	2024 cm	1381 cm	-200 cm/-148 cm/56 cm

Only available in standard execution.

Flat of concrete and drainage to be provided by customer.
In case of an earth installation customer has to provide concreting at the rear side against the element.

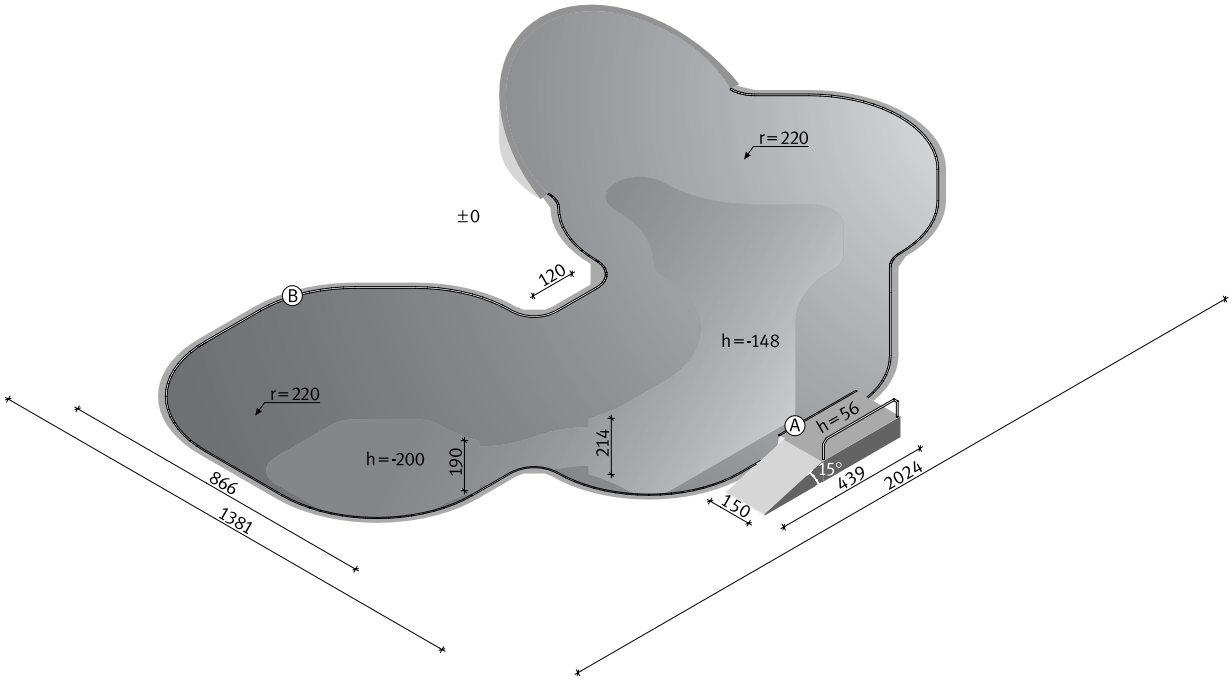

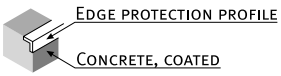

Detail: A

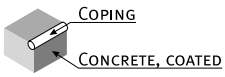

Detail: B

A **New:** Pool with deep end and roll-in

Product Code	Length	Width	Height
PDR01	1826 cm	1118 cm	-200 cm/-148 cm

Only available in standard execution.

Flat of concrete and drainage to be provided by customer.
In case of an earth installation customer has to provide concreting at the rear side against the element.

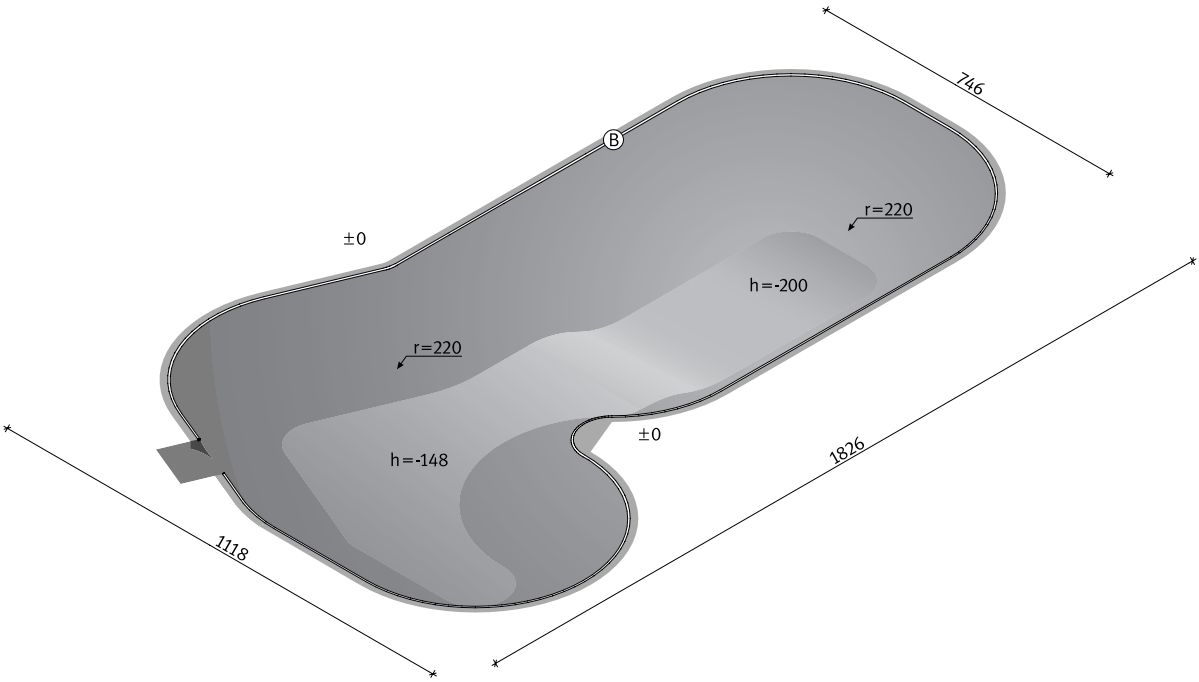

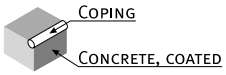

Detail: B

New: Pool with deep end, roll-in and visor

B

Product Code	Length	Width	Height
PDV01	1826 cm	1126 cm	-200 cm / -148 cm / 180 cm

Only available in standard execution.

Flat of concrete and drainage to be provided by customer.
In case of an earth installation customer has to provide concreting at the rear side against the element.

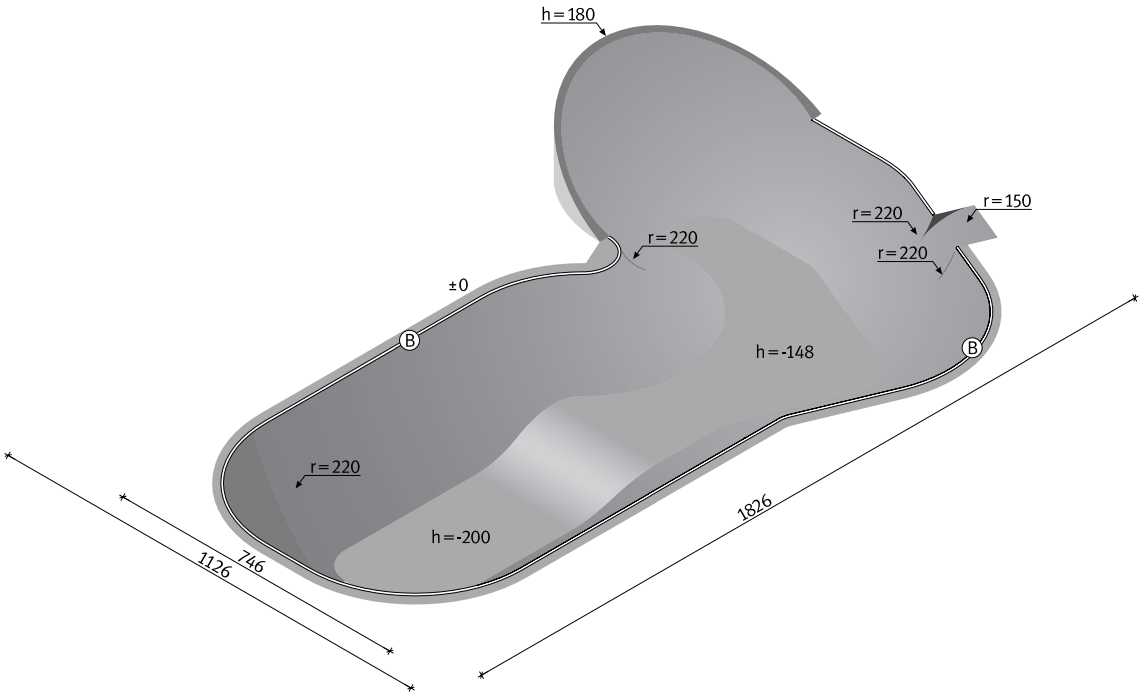

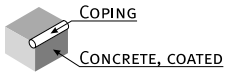

Detail: B

A **New:** Pool with cradle and low end

Product Code	Length	Width	Height
PCL01	1318 cm	844 cm	-148 cm/-200 cm

Only available in standard execution.

Flat of concrete and drainage to be provided by customer.
In case of an earth installation customer has to provide concreting at the rear side against the element.
Please note: Element only available after prior consultation of local regulations.

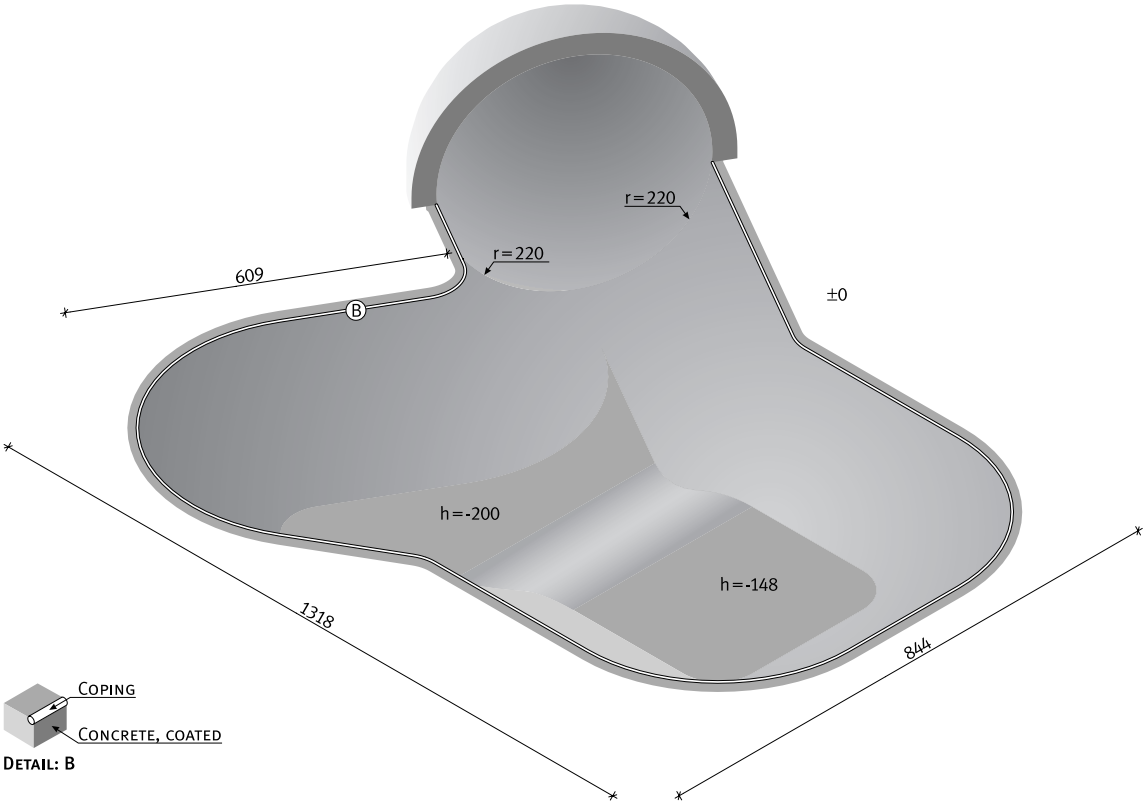

New: Pool with deep end

B

Product Code	Length	Width	Height
POD01	1841 cm	1372 cm	-148 cm/-200 cm

Only available in standard execution.

Flat of concrete and drainage to be provided by customer.
In case of an earth installation customer has to provide concreting at the rear side against the element.

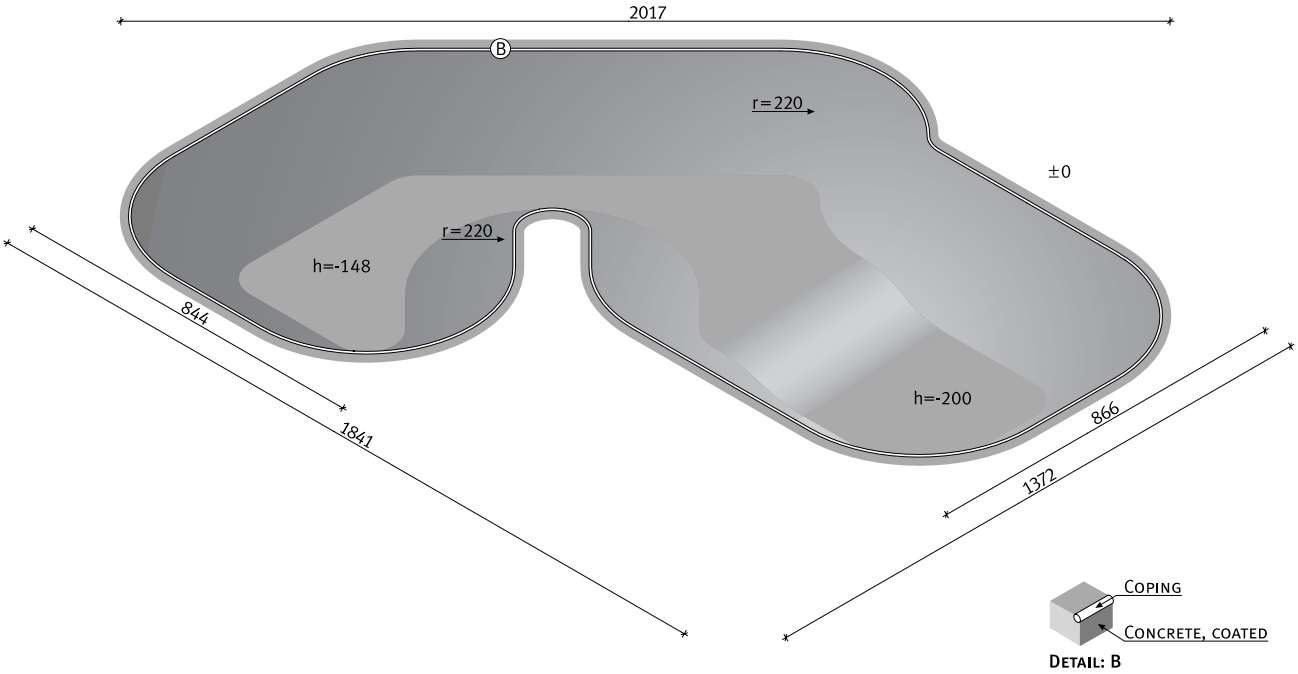

A New: Pool with deep end, visor, wave and elevator

Product Code	Length	Width	Height
PDV02	2356 cm	2523 cm	-200 / -148 / -98 / 180 cm

Only available in standard execution.

Flat of concrete and drainage to be provided by customer.
In case of an earth installation customer has to provide concreting at the rear side against the element.

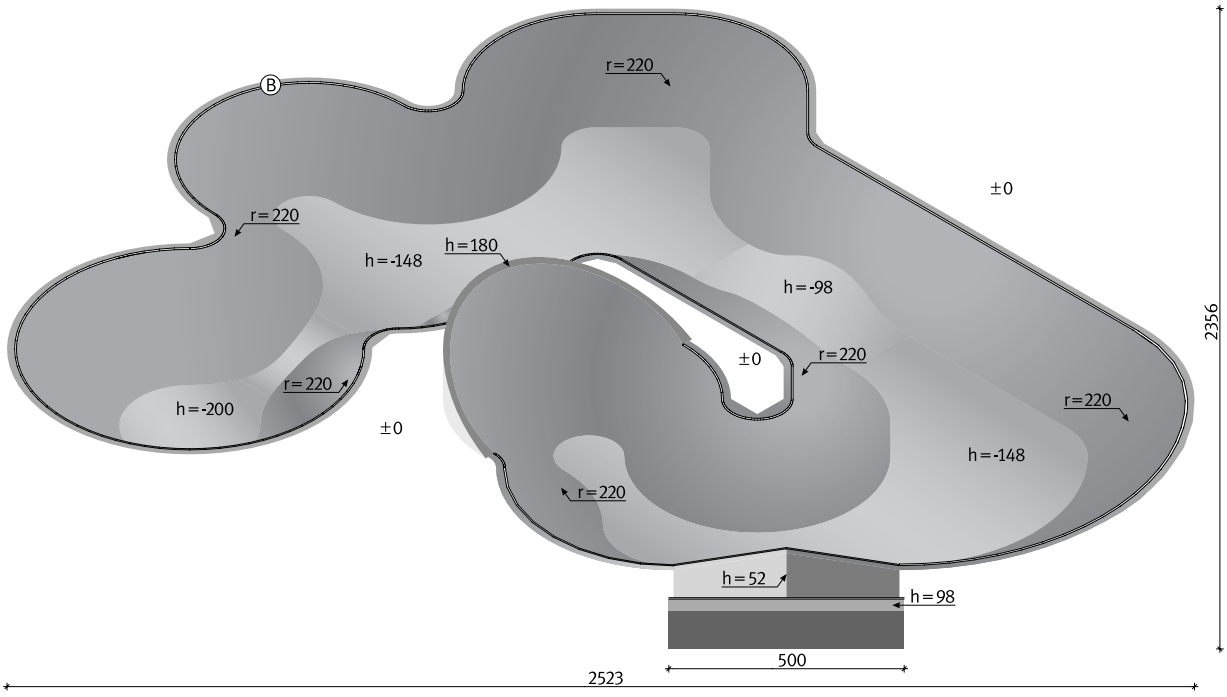

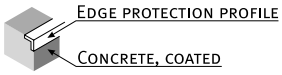

Detail: A

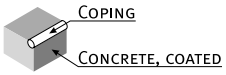

Detail: B

New: Pool with hip, spine and elevator

B

Product Code	Length	Width	Height
PHS01	1695 cm	1400 cm	148 cm / 200 cm

Only available in standard execution.

Platform, flat of concrete and drainage to be provided by customer.
In case of an earth installation customer has to provide concreting at the rear side against the element.

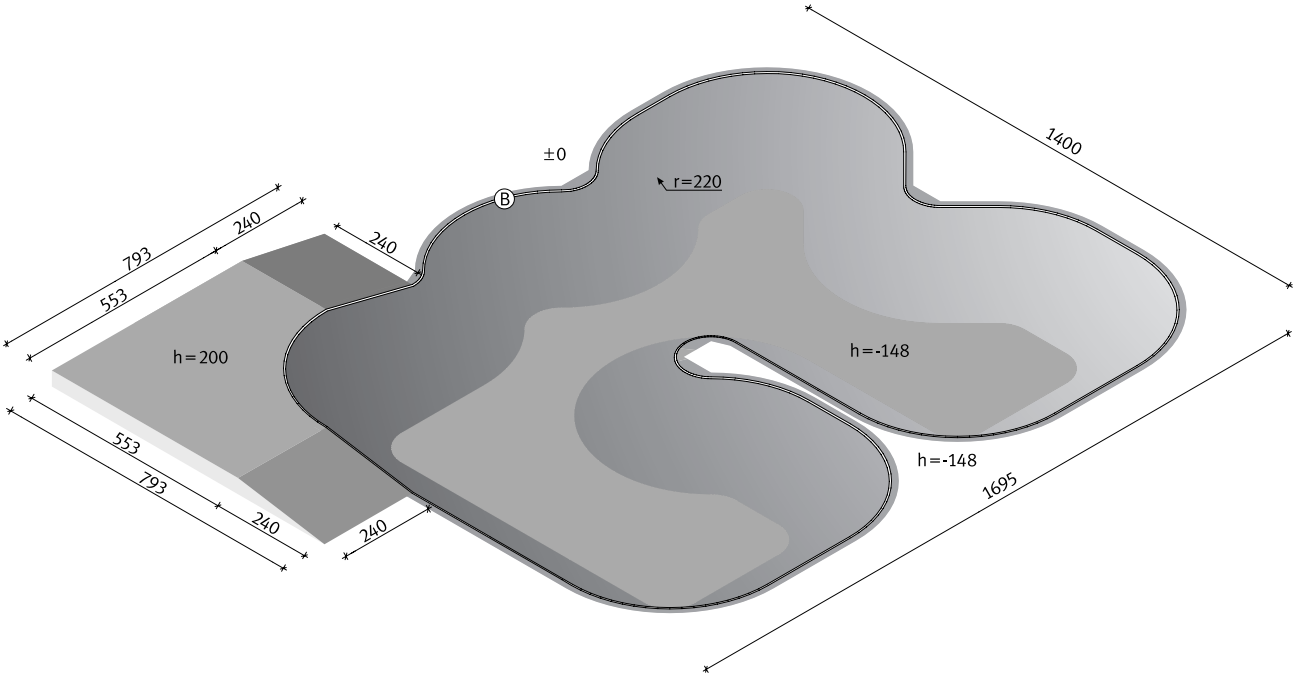

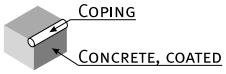

Detail: B

A **New:** Snakerun pool with roll-in and hillock

Product Code	Length	Width	Height
SNP15	1804 cm	1560 cm	-148 cm / -68 cm

Only available in standard execution.

Flat of concrete and drainage to be provided by customer.
In case of an earth installation customer has to provide concreting at the rear side against the element.

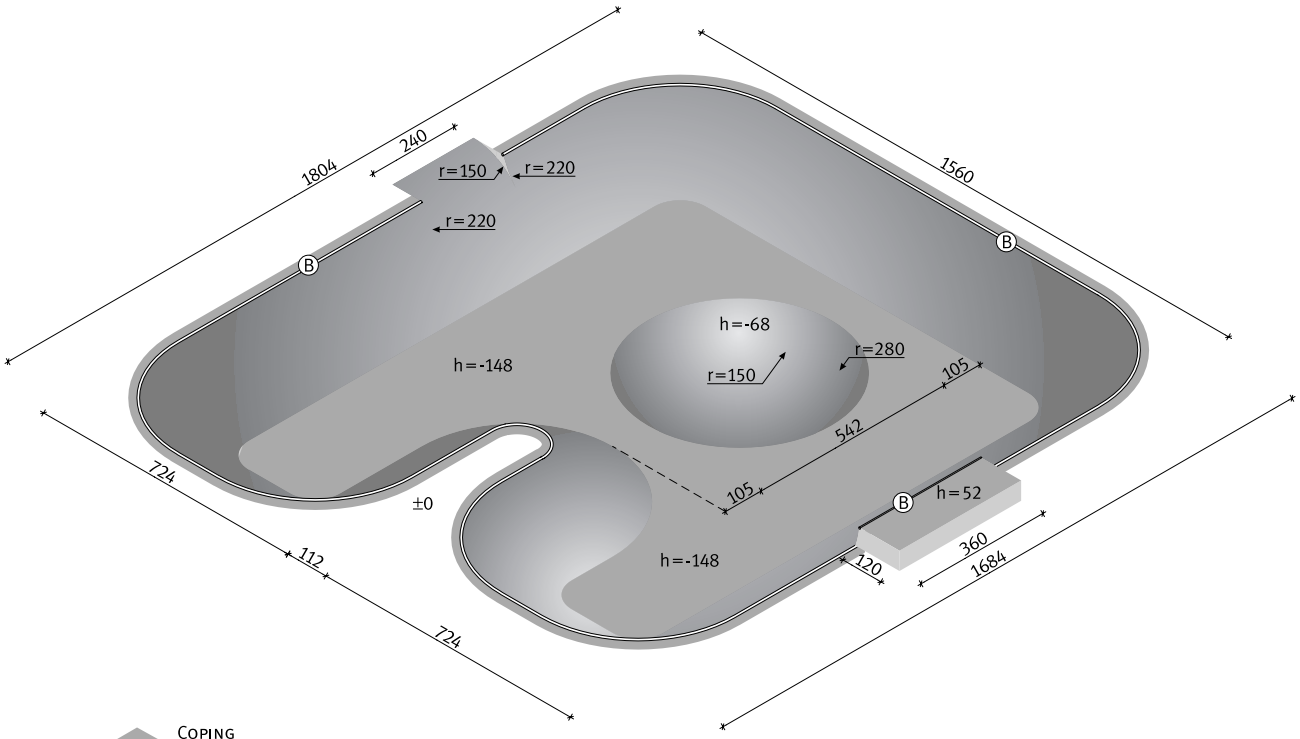

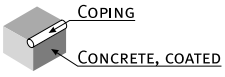

Detail: B

New: Kidney pool with stair

B

Product Code	Length	Width	Height
KID20	1428 cm	776 cm	-148 cm / -200 cm

Only available in standard execution.

Flat of concrete and drainage to be provided by customer.
In case of an earth installation customer has to provide concreting at the rear side against the element.

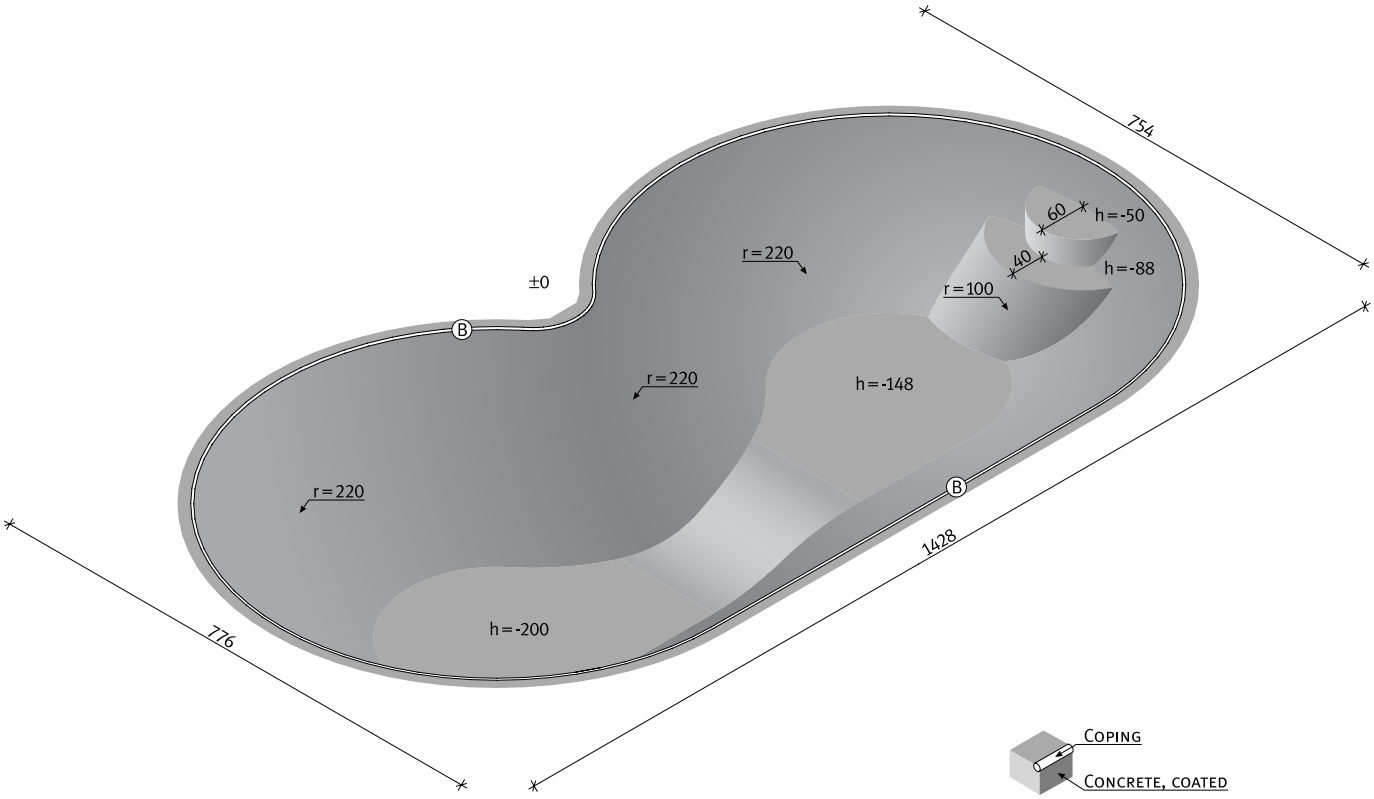

Detail: B

A Pool extension

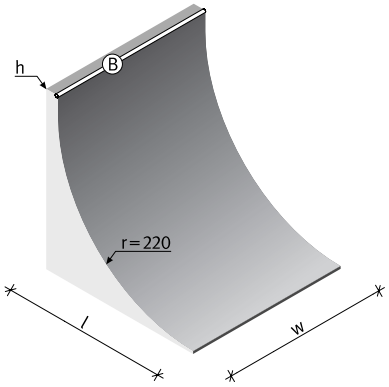

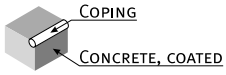

Detail: B

Product Code	Length	Width	Height
PN980	202 cm	120 cm	98 cm
PN120	215 cm	120 cm	120 cm
PN150	227 cm	120 cm	150 cm
PN200	238 cm	120 cm	200 cm
PN250	239 cm	120 cm	250 cm
PN981	202 cm	240 cm	98 cm
PN121	215 cm	240 cm	120 cm
PN151	227 cm	240 cm	150 cm
PN201	238 cm	240 cm	200 cm
PN251	239 cm	240 cm	250 cm
PN982	202 cm	360 cm	98 cm
PN122	215 cm	360 cm	120 cm
PN152	227 cm	360 cm	150 cm
PN202	238 cm	360 cm	200 cm
PN252	239 cm	360 cm	250 cm

Only available in standard execution.

New: Pool corner 45° B

Product Code	Width	Height
PE984	202 cm	98 cm
PE124	215 cm	120 cm
PE154	227 cm	148 cm
PE204	238 cm	200 cm
PE254	239 cm	250 cm

Only available in standard execution.

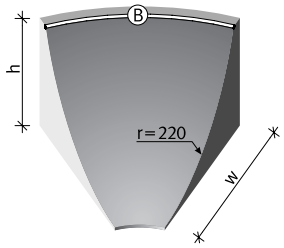

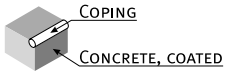

Detail: B

New: Pool corner 90° C

Product Code	Width	Height
PE980	202 cm	98 cm
PE120	215 cm	120 cm
PE150	227 cm	150 cm
PE200	238 cm	200 cm
PE250	239 cm	250 cm

Only available in standard execution.

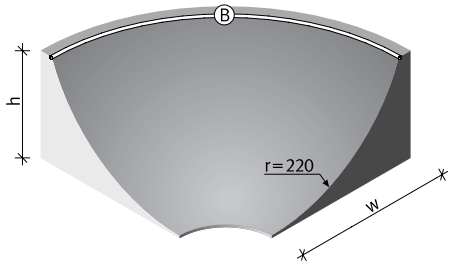

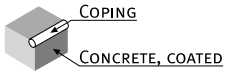

Detail: B

A Volcano 45°

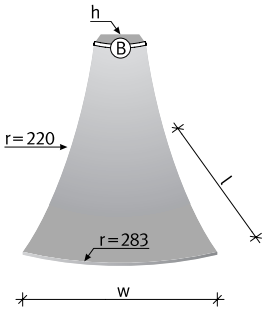

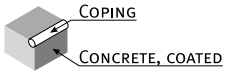

Detail: B

Product Code	Length	Width	Height
VS981	202 cm	197 cm	98 cm
VS121	215 cm	207 cm	120 cm
VS151	227 cm	217 cm	148 cm
VS201	238 cm	225 cm	200 cm
VS251	239 cm	256 cm	250 cm

Only available in standard execution.

B Volcano 90°

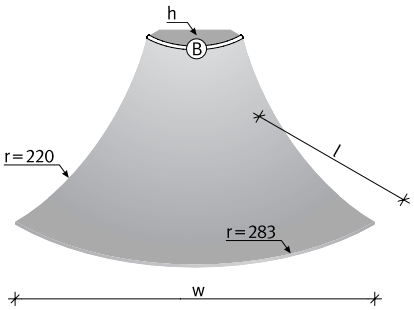

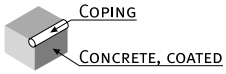

Detail: B

Product Code	Length	Width	Height
VS982	202 cm	365 cm	98 cm
VS122	215 cm	383 cm	120 cm
VS152	227 cm	400 cm	148 cm
VS202	238 cm	415 cm	200 cm
VS252	239 cm	417 cm	250 cm

Only available in standard execution.

Volcano 135° C

Product Code	Length	Width	Height
VS983	202 cm	477 cm	98 cm
VS123	215 cm	500 cm	120 cm
VS153	227 cm	523 cm	148 cm
VS203	238 cm	543 cm	200 cm
VS253	239 cm	545 cm	250 cm

Only available in standard execution.

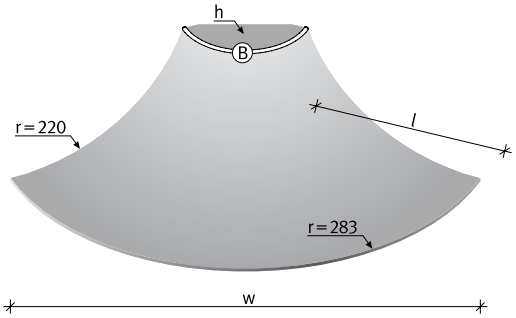

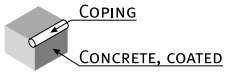

Detail: B

Volcano 180° D

Product Code	Length	Width	Height
VS984	202 cm	516 cm	98 cm
VS124	215 cm	542 cm	120 cm
VS154	227 cm	566 cm	148 cm
VS204	238 cm	588 cm	200 cm
VS254	239 cm	590 cm	250 cm

Only available in standard execution.

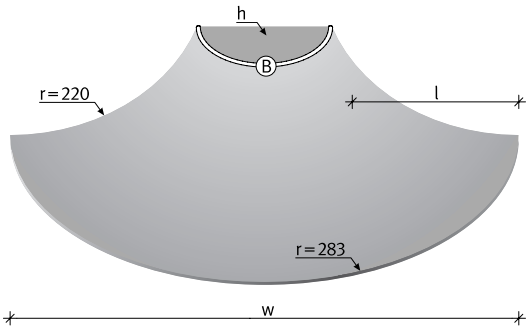

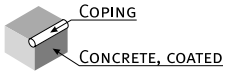

Detail: B

A Volcano

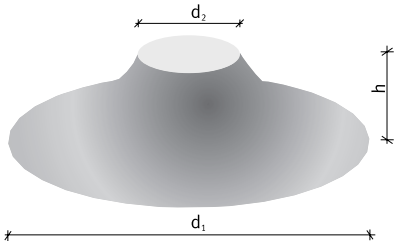

Product Code	Diameter 1	Diameter 2	Height
KS060	382 cm	80 cm	60 cm
KS080	420 cm	80 cm	80 cm
KS098	446 cm	80 cm	98 cm
KS120	609 cm	150 cm	120 cm
KS150	646 cm	150 cm	150 cm

Only available in standard execution.

B Extension element for volcano

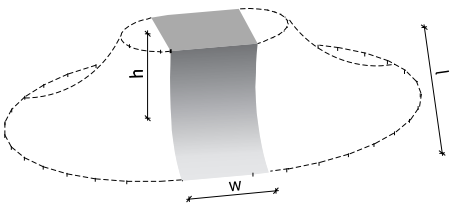

Product Code	Length	Width	Height
KSE12	609 cm	120 cm	120 cm
KSE15	646 cm	120 cm	150 cm

Straight extension option as an intermediate element.
Only available in standard execution.

Elevator C

Product Code	Length	Width	Height 1/2
ES980	202 cm	240 cm	98 cm / 148 cm
ES150	227 cm	240 cm	148 cm / 200 cm
ES250	238 cm	240 cm	200 cm / 250 cm

Available in standard execution only, incl. coping.

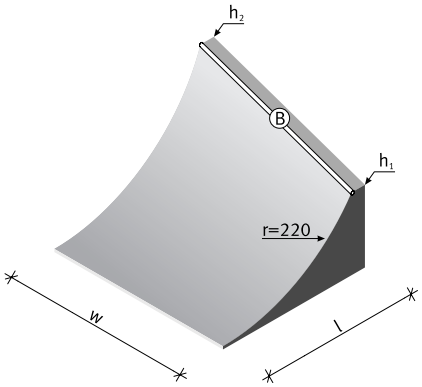

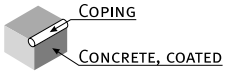

Detail: B

New: Bank behind elevator D

Product Code	Length 1/2	Width	Height 1/2
BHE01	215 cm/240 cm	240 cm	98 cm / 148 cm
BHE02	229 cm/240 cm	240 cm	148 cm / 200 cm
BHE03	239 cm/240 cm	240 cm	200 cm / 250 cm

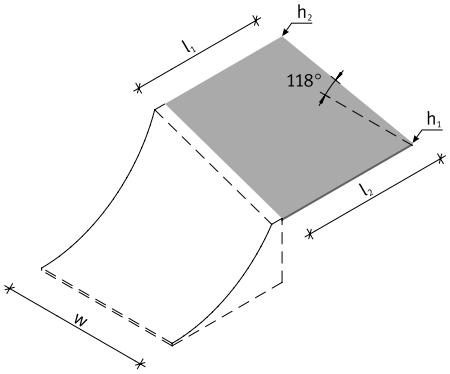

A New: Pool corner 90° as elevator

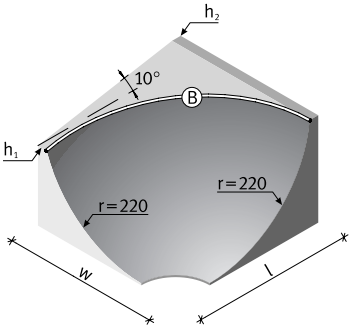

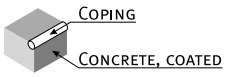

Detail: B

Product Code	Length	Width	Height
PEE01	302 cm	277 cm	98 cm / 148 cm
PEE02	313 cm	302 cm	148 cm / 200 cm
PEE03	314 cm	313 cm	200 cm / 250 cm

Only available in standard execution.

B New: Volcano 45° for waterfall

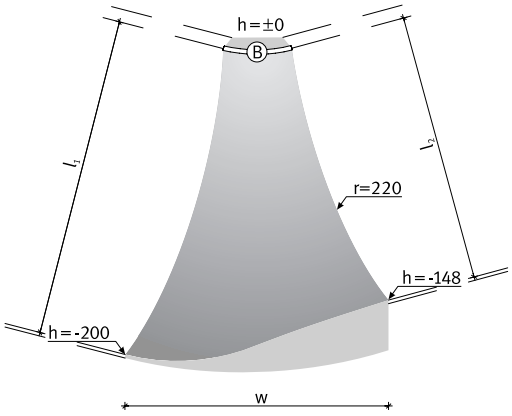

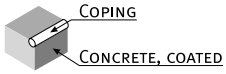

Detail: B

Product Code	Length 1 / 2	Width	Height
VSW02	238 cm / 227 cm	240 cm	148 cm / 200 cm

Only available in standard execution.

New: Volcano 90° for waterfall C

Product Code	Length	Width	Height
VSW01	283 cm	294 cm	148 cm / 200 cm

Only available in standard execution.

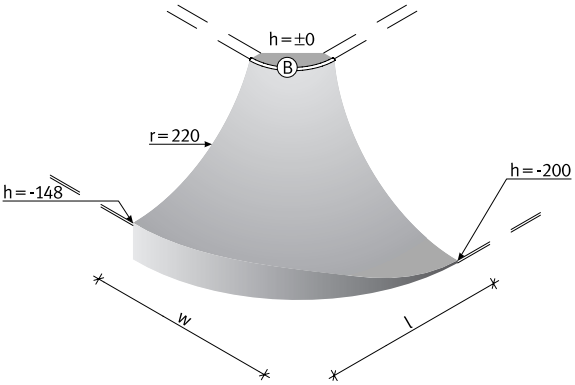

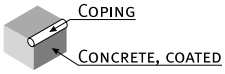

Detail: B

Pool extension for waterfall D

Product Code	Length	Width	Height
FT150	227 cm	240 cm	100 cm / 148 cm
FT200	238 cm	240 cm	148 cm / 200 cm
FT250	239 cm	240 cm	200 cm / 250 cm

Only available in standard execution.

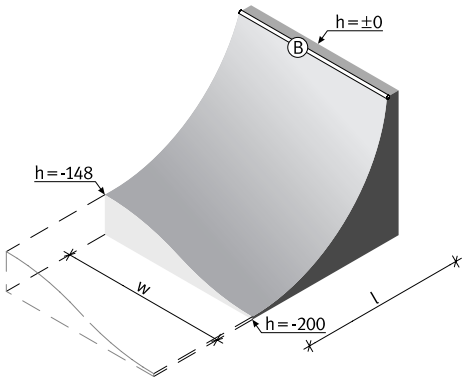

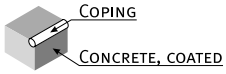

Detail: B

A Cross corner

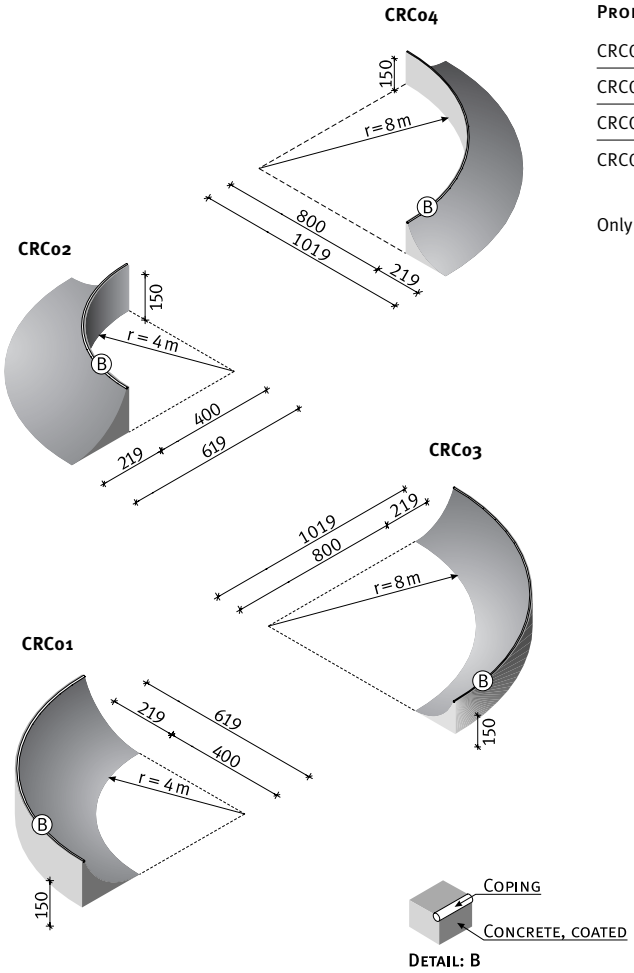

Product Code	Length	Width	Height
CRC01	619 cm	619 cm	150 cm
CRC02	619 cm	619 cm	150 cm
CRC03	1019 cm	1019 cm	150 cm
CRC04	1019 cm	1019 cm	150 cm

Only available in standard execution.

New: Roll-in 01 B

Product Code	Length	Width	Height
RO150	325 cm	240 cm	150 cm
RO200	363 cm	240 cm	200 cm
RO350	325 cm	360 cm	150 cm
RO300	363 cm	360 cm	200 cm

Only available in standard execution.

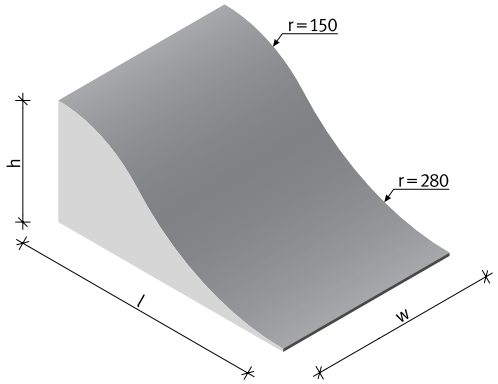

New: Roll-in 02 C

Product Code	Length	Width	Height
RO450	296 cm	240 cm	150 cm
RO550	328 cm	240 cm	200 cm
RO650	296 cm	360 cm	150 cm
RO700	328 cm	360 cm	200 cm

Only available in standard execution.

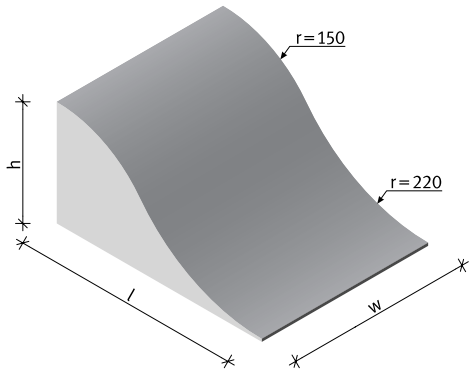

A Mellow hip 45°

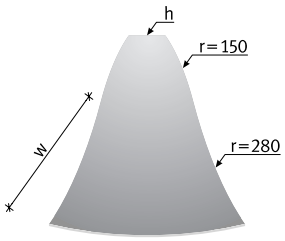

Product Code	Width	Height
MS4098	273 cm	98 cm
MS4150	325 cm	150 cm

Only available in standard execution.

B Mellow hip 90°

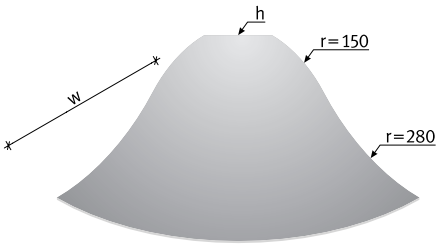

Product Code	Width	Height
MS812	273 cm	98 cm
MS822	325 cm	150 cm

Only available in standard execution.

Mellow hip 135° C

Product Code	Width	Height
MS813	273 cm	98 cm
MS823	325 cm	150 cm

Only available in standard execution.

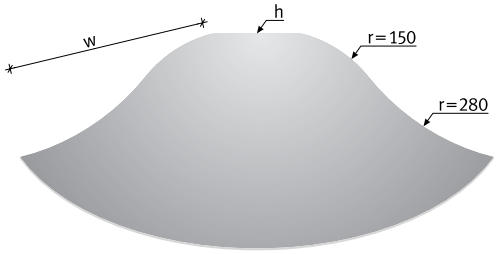

Mellow hip 180° D

Product Code	Width	Height
MS814	348 cm	98 cm
MS824	400 cm	150 cm

Only available in standard execution.

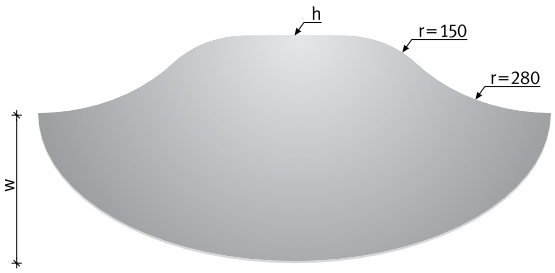

A Mellow pool extension

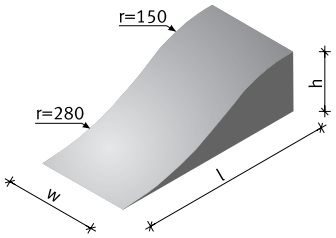

Product Code	Length	Width	Height
MN1080	250 cm	120 cm	80 cm
MN1098	273 cm	120 cm	98 cm
MN1150	325 cm	120 cm	148 cm
MN2080	250 cm	240 cm	80 cm
MN2098	273 cm	240 cm	98 cm
MN2150	325 cm	240 cm	148 cm
MN3080	250 cm	360 cm	80 cm
MN3098	273 cm	360 cm	98 cm
MN3150	325 cm	360 cm	148 cm

Only available in standard execution.

B Mellow pool corner 45°

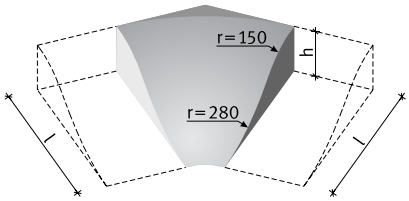

Product Code	Length	Height
MPE45	250 cm	80 cm
MPE46	273 cm	98 cm
MPE47	325 cm	148 cm

Only available in standard execution.

Mellow pool corner 90° C

Product Code	Length	Height
MPE90	250 cm	80 cm
MPE91	273 cm	98 cm
MPE92	325 cm	148 cm

Only available in standard execution.

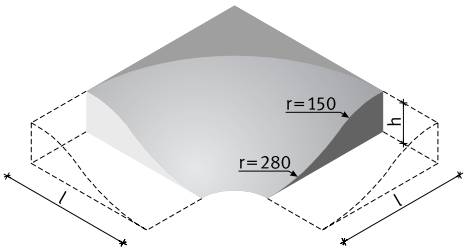

Hillock D

Product Code	Diameter	Height
HLK80	500 cm	80 cm
HLK98	557 cm	98 cm

Only available in standard execution.

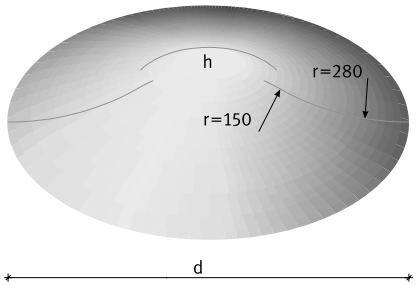

A Mellow to ramp

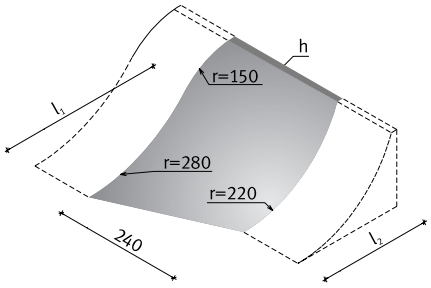

Prod. Cde.	Length 1	Length 2	Width	Height
MRT098	273 cm	202 cm	240 cm	98 cm
MRT120	298 cm	215 cm	240 cm	120 cm
MRT150	325 cm	227 cm	240 cm	150 cm

Only available in standard execution.

B Mellow to bank

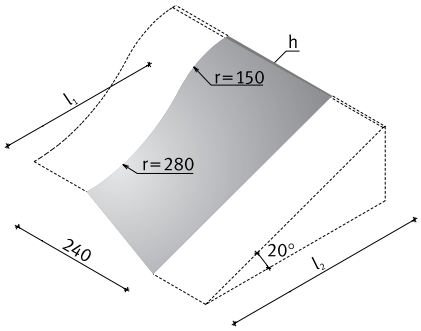

Prod. Cde.	Length 1	Length 2	Width	Height
MBT098	273 cm	274 cm	240 cm	98 cm
MBT120	298 cm	335 cm	240 cm	120 cm
MBT150	325 cm	412 cm	240 cm	150 cm

Only available in standard execution.

Bank to ramp C

Prod. Cde.	Length 1	Length 2	Width	Height
BRT098	202 cm	274 cm	240 cm	98 cm
BRT120	215 cm	335 cm	240 cm	120 cm
BRT150	227 cm	412 cm	240 cm	150 cm

Only available in standard execution.

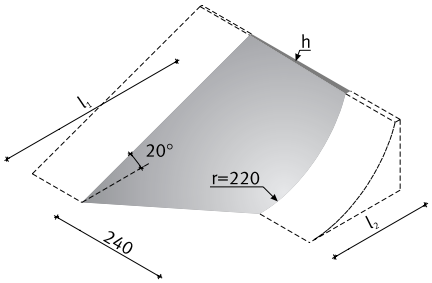

New: Mellow shoulder D

Prod. Cde.	Length	Width	Height
MLS01	178 cm	240 cm	52 cm

Only available in standard execution.
Add-on element on the rear.

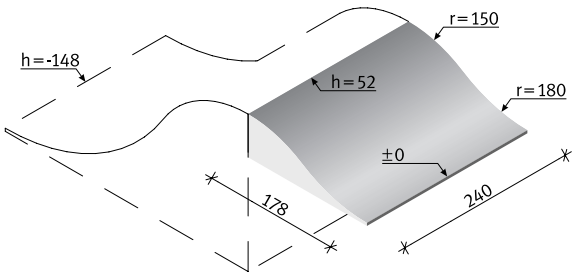

A Visor

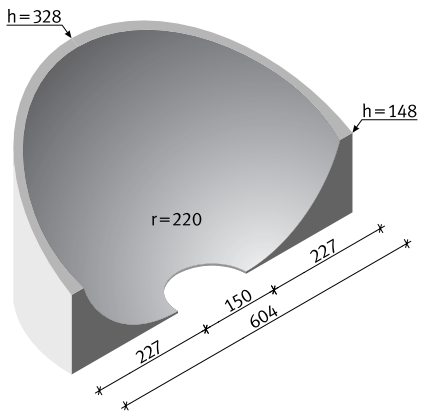

Product Code	Width	Height
VS328	604 cm	148 cm/328 cm

Only available in standard execution.

B Nose

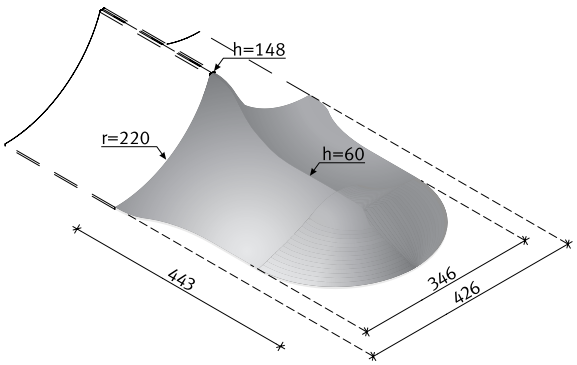

Product Code	Length	Width	Height
NOS150	443 cm	426 cm	60 cm / 148 cm

Only available in standard execution.

Cradle C

Product Code	Length	Width	Height
CR440	520 cm	260 cm	484 cm

Only available in standard execution.

Please note: Element only available after prior consultation of local regulations.

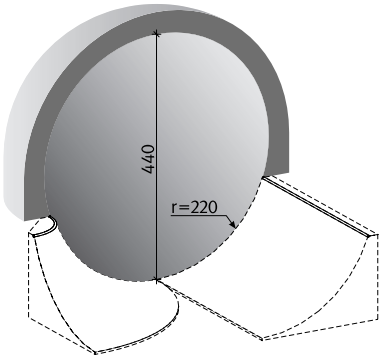

New: Elevator corner D

Product Code	Length	Width	Height
EC230	609 cm	609 cm	148 cm / 188 cm / 228 cm

Only available in standard execution.

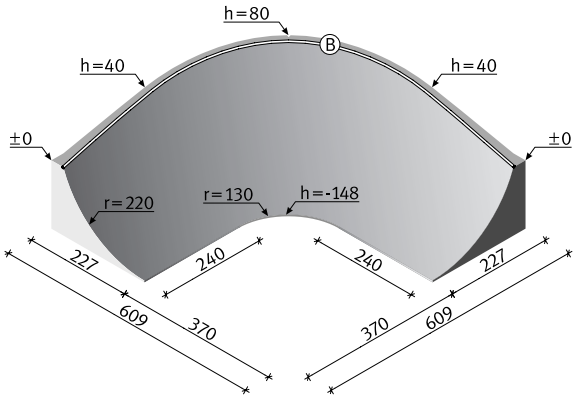

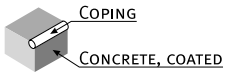

Detail: B

A New: Hill wallride

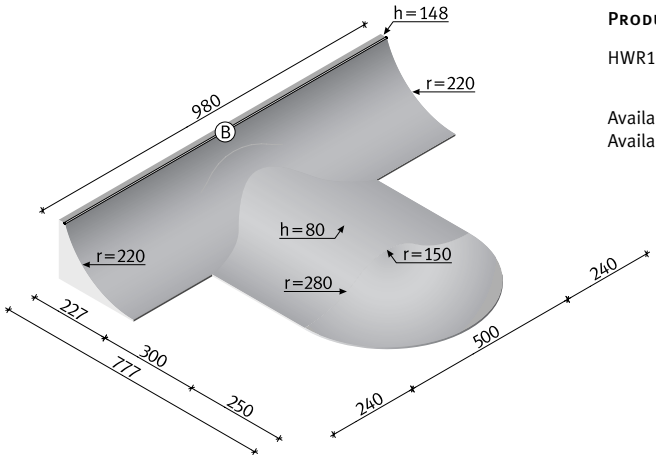

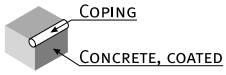

Detail: B

Product Code	Length	Width	Height
HWR150	980 cm	777 cm	80 cm / 148 cm

Available in standard execution only, incl. coping.
Available in connection with rear platform only.

B New: Mellow extension

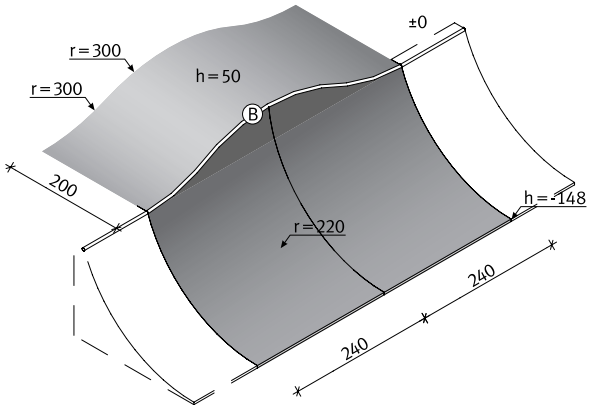

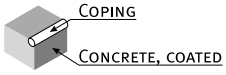

Detail: B

Product Code	Length	Width	Height
PET01	408 cm	480 cm	148 cm / 200 cm

Only available in standard execution.

New: Loveseat C

Product Code	Length	Width	Height
LST01	238 cm	240 cm	148 cm / 200 cm

Only available in standard execution.

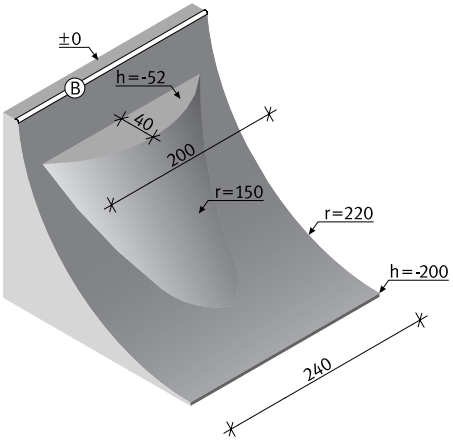

New: Bank extension D

Product Code	Length	Width	Height
MLS01	720 cm	274 cm	148 cm / 200 cm

Only available in standard execution.

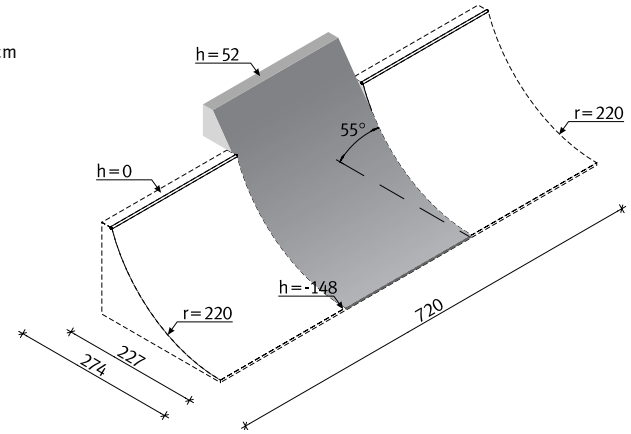

i

Planning with Concrete® means to plan with experience. With hundreds of skate parks installed in Germany and abroad we are the worldwide leading manufacturer of concrete skate parks. This shows us that we are on the right track. We combine the ideas of experienced skaters with our high standard of quality, for which we are well known, with our experience of many years with this kind of material and it's processing. You can always rely on our team. By conviction we assist our customers all the way from the draft to the opening of the park. This includes our expert consultants who are pleased to explain our products to you right on the spot, our planning department & our installation technicians who ensure a smooth installation of the elements.

Also you will find Concrete® expert consultants and representatives throughout Europe. In many other countries we are represented by contractual partners. And now also in the homeland of the skate parks, as our skate parks are also exported to the USA since 2001. Our licensee Barkman Concrete® - **www.skateconcept.com** – is in charge of the North American market. Just like us also Barkman is experienced in working with concrete for many years. For this reason the Concrete® skate parks are not produced only in Europe, but in the USA and Canada as well.

We also meet the quality standard we are known for with regard to our accessories. Therefore all copings and edge protections are galvanized and the transition sheet metals are made of stainless and weatherproof steel. In case of copings and edge protections in galvanized execution rusty spots are material related and are inevitable in the long run. However, it is a matter of fact that the users prefer to go for the galvanized copings.

Guard rails and frames for the information signs as well as the supporting structure for our miniramps, halfpipes and bowls are also galvanized. We abstained from the use of screwings for our elements to the greatest possible extent. The guard rails of all elements are firmly casted into concrete, as are copings, edge protections and metal transition sheets. These elaborate production processes safeguard your investment and also save you from the usual maintenance works required for the elements.

A Information signs

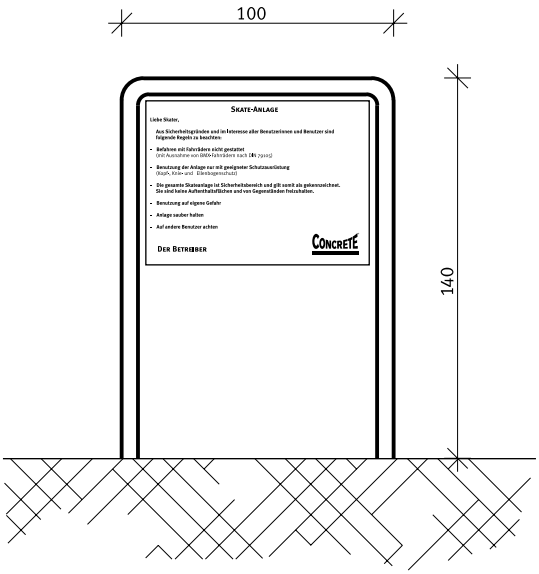

Product Code	Description
HT010	Information sign with frame, one-sided
HT020	Information sign with frame, two-sided
HT030	Information sign without frame, one-sided
HT040	Information sign without frame, two-sided
HT050	Surcharge for special text/information sign
HT060	Frame for information sign

Information sign for requirements related to safety, frame of solid galvanized circular tube. Board for labelling field of solid multilayer board, brand Dibond.

Guard rails B

Product Code	Description
GE001	Guard rail on the side(s)
GE125	Guard rail on the rear 120 cm
GE250	Guard rail on the rear 240 cm
GE375	Guard rail on the rear 360 cm
GE002	Guard rail on the rear per lm

Guard rail made of solid tube in galvanized execution.

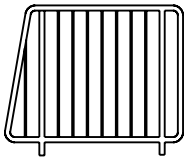

Guard rail on the side(s)

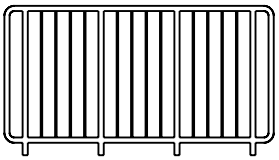

Guard rail on the rear

Drain C

Product Code	Description
GU001	drain

Detail of drainage

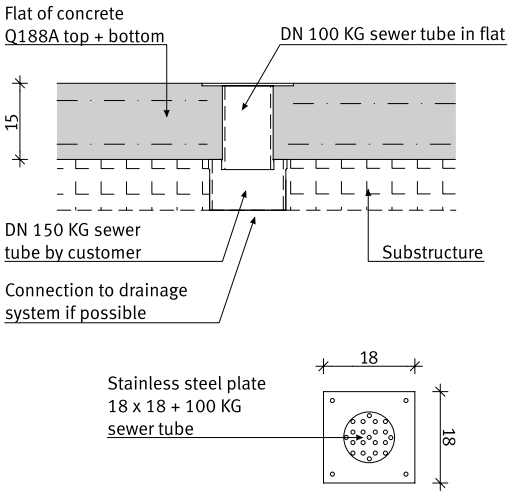

Top view 100 kg sewer tube

JAN 2008 DESIGN BY WWW.NZWG.DE

Concrete® Sportanlagen GmbH

For the last 50 years Hermann Rudolph Baustoffwerk has been dealing with concrete. Therefore we are claiming to know all about the subtleties of this material. We have more than 150 employees as well as an in-house engineering and design department with 18 engineers and technicians. Furthermore we can now take advantage of the extensive experience we gained through designing and producing high-class elements for the building industry. This is of great benefit for our leisure facilities. Our leisure facilities are distributed by Concrete® Sportanlagen GmbH.

CONCRETE®
SKATE PARKS | RUDOLPH

Concrete® Sportanlagen GmbH

www.concrete-skateparks.com
www.concrete-sportanlagen.com
info@concrete-sportanlagen.com

Ellhofen/Steinbißstr. 15
D-88171 Weiler-Simmerberg, Germany

Phone +49/8384/8210-90
Telefax +49/8384/8210-91