CYLINDRICAL CASED AXIAL FLOW FANS

COMPACT Series TCBB / TCBT (aluminium impellers)

IP65 (1)

Range of cylindrical cased axial fans fitted with aluminium impellers and manufactured from high grade rolled galvanised steel and **protected against corrosion by cataforesis primer and black polyester paint finish**.

All models are supplied with pre-wired wiring junction box located on the outside of the fan casing for easy wiring access.

Available, depending upon the model, with single or three phase motors in 2, 4, 6 or 8 poles.

Motors

All the motors are **IP65** (1), **Class F** insulation (2), equipped with thermal protection (3).

All motors are speed controllable by autotransformer except 2 poles and /4-560, /4-630, 710 and T/800 models.

Three phase motors are speed controllable by inverter.

Electrical supplies:

Single phase 230V-50Hz. (Capacitor located inside the wiring terminal box).

Three phase 230/400V-50Hz or 400V-50Hz (See characteristic chart).

(1) 2/315/H, 2/355/H, /4-710 and 800 models are IP55.
(2) Working temperatures from -40ºC to 70ºC (except /2-315/H, /2-355/H, /4-710 and 800 models: suitable for usage in environments from -20ºC to 40ºC).
(3) Except models 2/315/H, 2/355/H, and Ø 800.

Additional Information

Standard air direction: form (B) configuration (Impeller over Motor); form (A) configuration (Motor over Impeller) for /2-315/L, /2-315/G, /2-355/J and /2-355/I models.

On request, explosion proof versions in accordance to ATEX Directive for three phase models:

- Increased safety Ⓔx II2G EExeIIT3 (except 250 models).

- Flame proof only for /4-710 and 800 models:

Ⓔx II2G EExdIIBT5 or T4, Ⓔx II2G EExdIICT4.

Ⓔx II2G II3D Ex tD 125ºC or 135ºC.

Working temperatures from ATEX versions:

- from -20ºC to 55ºC: /4, 315 to 630 models
/6, 355 to 710 models

- from -20ºC to 40ºC: /4, 710 and 800 models
/6-800 model

On request

Air direction: form (A) configuration (Motor over Impeller).

Two speed motors (4/8 poles).

APPLICATIONS

Warehouses

Workshops

Commercial premises

Car parks

VERSIONS

Corrosion resistance

Rolled steel casings and motor support **protected by cataforesis** primer and black **polyester paint finish**. Stainless steel screws

Terminal box

Wiring terminal box with cable gland PG-11

Impeller dynamically balanced

Impellers are **dynamically balanced**, according to ISO 1940 standard, giving vibration free operation

Configuration for /4-710 and 800 models

CYLINDRICAL CASED AXIAL FLOW FANS

COMPACT series TCFB / TCFT (plastic impellers)

Range of cylindrical cased axial fans fitted with plastic impellers and manufactured from high grade rolled galvanised steel and **protected against corrosion by cataforesis primer and black polyester paint finish**.

All models are supplied with pre-wired wiring junction box located on the outside of the fan casing for easy wiring access.

Available, depending upon the model, with single or three phase motors in 2, 4, 6 or 8 poles.

Motors

All the motors are **IP65**, **Class F** insulation (1), equipped with **thermal protection**.

All motors are speed controllable except 2 poles, T/4-560/H, /4-630, B/6-710 and B/8-710.

Three phase motors are speed controllable by inverter.

Electrical supplies:

Single phase 230V-50Hz. (Capacitor located inside the wiring terminal box).

Three phase 230/400V-50Hz or 400V-50Hz (See characteristic chart).

(1) Working temperatures from -40ºC up to 70ºC (except /2-315/H,/2-355/H).

Additional Information

Standard air direction: form (B) configuration (Impeller over Motor).

On request

Air direction: form (A) configuration (Motor over Impeller).

A P P L I C A T I O N S

Warehouses

Workshops

Commercial premises

Car Parks

Corrosion resistance

Rolled steel casings and motor support **protected by cataforesis primer and black polyester paint finish**. Stainless steel screws

Terminal box

Wiring terminal box with cable gland PG-11

Impeller dynamically balanced

Impellers are **dynamically balanced**, according to ISO 1940 standard, giving vibration free operation

Reference

T	C	B	T	/	4	-	4	0	0	/	H	-	B		4	0	0	V	5	0	Hz			
1	2	3	4		5		6				7		8		9				10				11	

1 - T: Compact Plate Axial Fan

2 - C: Series designation

3 - Impeller Type:
- **F:** Ø 250-Ø 630 Fixed blade plastic impeller
- **B:** Ø 250-Ø 400 Fixed blade aluminium impeller
  Ø 450-Ø 800 Adjustable blade aluminium impeller

4 - Type of supply:
- **B:** Single phase
- **T:** Three phase

5 - Number of poles:
- **2:** (approx. 2800 r.p.m. - 50 Hz)
- **4:** (approx. 1400 r.p.m. - 50 Hz)
- **6:** (approx. 900 r.p.m. - 50 Hz)
- **8:** (approx. 700 r.p.m. - 50 Hz)

6 - : Nominal Diameter of Fan. (mm).

7 - : Pitch Angle

8 - Direction of Air: **A:** Motor over Impeller
B: Impeller over Motor

9 - Voltage:
230 V (Single Phase)
230/400 V (Three Phase)
400 V (Three Phase)

10 - Frequency of Service: 50 Hz
60 Hz

11 - Special versions:
- **2 V:** Two Speed Motors
  4/8 poles of motor for models from Ø 450 up to Ø 800 mm.
  6/12 poles of motor for models from Ø 710 up to Ø 800 mm.
- **C:** Condensation drain holes on motor.
- **EX:** Explosion proof and flame proof versions.

Supply voltages and frequencies

Mains supply voltage	Motor type	Connection	Speed
SINGLE PHASE 220V 50Hz, 240V 50Hz	230V 50Hz	See wiring diagram	High
THREE PHASE 220V 50Hz 240V 50Hz	230/400V 50Hz	△	High
		⅄	Low*
THREE PHASE 380V 50Hz 415V 50Hz	230/400V 50Hz	⅄	High
	400V 50Hz	△	High
		⅄	Low*

* From sizes 450 up to 630/L diameter.

Acoustic characteristics

The sound levels –NPS- shown in the technical characteristic chart, correspond to the value of sound pressure dB(A), measured in free field conditions at a distance equivalent to three times the diameter of the impeller with a minimum of 1.5 meters.
Sound power level spectrum in dB(A) at the corresponding octave band average frequencies in Hz.

LwA ASP QMAX	63	125	250	500	1000	2000	4000	8000
2-250/H	50	61	68	73	74	74	67	58
2-315/H	51	62	82	77	85	85	79	71
2-355/H	58	63	87	83	89	92	86	79

LwA ASP QMAX	63	125	250	500	1000	2000	4000	8000
4-250/H	44	50	57	58	60	59	53	42
4-315/H	37	47	57	61	66	63	57	48
4-355/H	39	59	56	65	70	66	61	52
4-400/H	41	62	58	67	74	70	66	43
4-450/H	41	57	60	69	73	71	65	55
4-500/H	44	61	64	73	76	75	68	59
4-560/L	44	60	66	75	78	76	71	62
4-560/H	46	61	67	76	80	78	72	64
4-630/L	46	60	69	78	82	80	75	67
4-630/H	47	61	70	79	83	81	76	68
4-710/L	52	72	79	84	86	83	78	70
4-710/H	56	76	83	88	90	86	81	74
4-800/L	64	81	92	95	96	90	83	74
4-800/K	67	83	94	98	98	92	85	76
4-800/G	69	85	96	99	100	94	87	78
4-800/H	71	87	99	102	102	97	90	81

LwA ASP QMAX	63	125	250	500	1000	2000	4000	8000
6-355/H	39	45	46	52	53	54	48	37
6-400/H	34	46	49	59	60	60	53	41
6-450/H	32	48	52	60	64	62	56	47
6-500/H	36	52	55	64	68	66	60	50
6-560/L	36	51	57	66	70	68	62	54
6-560/H	38	53	59	68	72	70	64	56
6-630/L	37	51	60	69	73	71	65	58
6-630/H	39	53	62	71	75	72	67	60
6-710/L	45	66	72	78	79	76	71	64
6-710/H	48	68	75	81	82	79	74	67
6-800/L	58	74	86	89	89	84	77	68
6-800/K	60	76	88	91	91	85	78	69
6-800/G	61	77	88	92	92	86	79	70
6-800/H	62	79	90	93	94	88	81	72

LwA ASP QMAX	63	125	250	500	1000	2000	4000	8000
8-450/H	38	41	47	52	58	55	47	37
8-500/H	41	43	50	55	61	58	49	39
8-560/H	44	47	53	58	64	61	53	43
8-630/H	43	49	59	67	71	67	58	50
8-710/H	42	62	69	74	76	72	67	60
8-800/L	54	70	81	85	85	79	72	63
8-800/K	54	71	82	85	86	80	73	64
8-800/G	55	72	83	86	86	81	74	65
8-800/H	56	72	84	87	87	82	75	66

Technical characteristics for models with ALUMINIUM impellers

Before installation check that the product electrical characteristics listed on the data plate label (Voltage, power, frequency etc) match those of the intended electrical supply.

Model	Speed	Maximum absorbed power	Maximum current (A)		Sound pressure level	Maximum air volume	Weight	Speed controller		Inverter controllers	
	(r.p.m.)	(W)	at 230 V	at 400 V	(dB(A))	(m^3/h)	(kg)	REB	RMB/T*	VFTM*	VFKB*
SINGLE PHASE 2 POLE											
TCBB/2-250/H	2500	240	1,2	-	65	2210	8,0	–	–		
TCBB/2-315/H(0,37kW)	2550	730	3,5	-	75	4800	12,0	–	–		
TCBB/2-315/L-A	2500	380	1,7	-	70	3260	11,0	–	–		
TCBB/2-355/H(0,55kW)	2500	1200	5,4	-	81	7000	15,0	–	–		
TCBB/2-355/J-A	2000	460	2,1	-	71	4000	13,2	–	–		
SINGLE PHASE 4 POLE											
TCBB/4-250/H	1330	60	0,3	-	52	1250	8,0	REB-1	RMB-1,5		
TCBB/4-315/H	1300	100	0,6	-	54	2340	11,0	REB-1	RMB-1,5		
TCBB/4-355/H	1225	200	1,0	-	58	3470	13,2	REB-2,5	RMB-1,5		
TCBB/4-400/H	1200	340	1,6	-	60	5100	15,5	REB-2,5	RMB-3,5		
TCBB/4-450/H	1370	620	2,7	-	62	7100	21,0	REB-5	RMB-3,5		
TCBB/4-500/H	1300	800	3,5	-	66	9710	25,0	REB-5	RMB-3,5		
TCBB/4-560/L	1300	1240	5,8	-	67	11750	33,0	REB-10	RMB-8		
TCBB/4-560/H	1340	1680	7,7	-	69	13780	34,7	–	–		
TCBB/4-630/L	1280	1800	8,4	-	70	16100	40,0	–	–		
SINGLE PHASE 6 POLE											
TCBB/6-355/H	800	90	0,5	-	50	2220	13,2	REB-1	RMB-1,5		
TCBB/6-400/H	750	110	0,6	-	52	3240	15,5	REB-1	RMB-1,5		
TCBB/6-450/H	890	240	1,2	-	53	4590	20,7	REB-2,5	RMB-1,5		
TCBB/6-500/H	890	310	1,7	-	57	6100	24,8	REB-2,5	RMB-3,5		
TCBB/6-560/L	900	420	2,4	-	58	7400	33,0	REB-2,5	RMB-3,5		
TCBB/6-560/H	900	550	2,8	-	60	8680	33,5	REB-5	RMB-3,5		
TCBB/6-630/L	860	640	3,1	-	60	10600	38,0	REB-5	RMB-3,5		
TCBB/6-630/H	930	980	5,4	-	62	13000	38,5	REB-10	RMB-8		
TCBB/6-710/L	900	1050	5,5	-	66	15800	46,0	–	–		
TCBB/6-710/H	840	1300	6,5	-	69	17800	46,0	–	–		
SINGLE PHASE 8 POLE											
TCBB/8-450/H	620	140	0,8	-	47	3450	20,7	REB-1	RMB-1,5		
TCBB/8-500/H	595	175	1	-	48	4750	24,8	REB-2,5	RMB-1,5		
TCBB/8-560/H	595	260	1,4	-	50	6620	33,0	REB-2,5	RMB-1,5		
TCBB/8-630/H	680	440	2,1	-	57	8730	38,5	REB-2,5	RMB-3,5		
TCBB/8-710/H	625	480	2,4	-	63	11000	46,0	–	–		
THREE PHASE 2 POLE											
TCBT/2-250/H	2500	240	0,9	0,5	65	2210	8,0			VFTM-Tri 0,37	VFKB-45
TCBT/2-315/H(0,37kW)	2780	770	2,1	1,2	75	4800	12,0			VFTM-Tri 0,37	VFKB-45
TCBT/2-315/G-A	2600	400	1,4	0,8	70	3250	11,0			VFTM-Tri 0,37	VFKB-45
TCBT/2-355/H(0,55kW)	2750	1240	3,1	1,8	81	7000	15,0			VFTM-Tri 0,55	VFKB-45
TCBT/2-355/I-A	2380	520	1,6	0,8	71	4000	13,2			VFTM-Tri 0,37	VFKB-45
THREE PHASE 4 POLE											
TCBT/4-250/H	1330	60	0,3	0,2	52	1250	8,0		RMT-1,5	VFTM Tri 0,37	VFKB-45
TCBT/4-315/H	1300	150	0,6	0,3	54	2340	11,0		RMT-1,5	VFTM-Tri 0,37	VFKB-45
TCBT/4-355/H	1260	200	0,8	0,5	58	3470	13,2		RMT-1,5	VFTM-Tri 0,37	VFKB-45
TCBT/4-400/H	1360	300	1,4	0,8	60	5100	15,5		RMT-1,5	VFTM-Tri 0,37	VFKB-45
TCBT/4-450/H	1400	630	2,7	1,6	62	7100	21,0		RMT-2,5	VFTM-Tri 0,55	VFKB-45
TCBT/4-500/H	1340	880	2,9	1,7	66	9710	25,0		RMT-2,5	VFTM-Tri 0,55	VFKB-45
TCBT/4-560/L	1320	1210	3,9	2,3	67	11750	33,0		RMT-2,5	VFTM-Tri 0,75	VFKB-45
TCBT/4-560/H	1370	1520	4,9	2,8	69	13780	34,7			VFTM-Tri 1,1	VFKB-45
TCBT/4-630/L	1330	1900	5,6	3,2	69	16100	39,0			VFTM-Tri 1,5	VFKB-45
TCBT/4-630/H	1360	2200	7,1	4,0	70	18200	40,0			VFTM-Tri 1,5	VFKB-45
TCBT/4-710/L(1,5kW)	1420	2500	8,4	4,8	73	21590	46,0			VFTM-Tri 2,2	VFKB-48
TCBT/4-710/H(3kW)	1450	3400	11,1	6,4	76	25500	54,0			VFTM-Tri 3	VFKB-48
TCBT/4-800/L(3kW)	1450	3700	11,2	6,5	82	29200	65,0			VFTM-Tri 3	VFKB-48
TCBT/4-800/K(4kW)	1450	5000	-	9,0	84	33300	68,0			VTM-Tri 4	–
TCBT/4-800/G(5,5kW)	1460	6900	-	11,6	87	38400	81,0			VTM-Tri 5,5	–
TCBT/4-800/H(7,5kW)	1460	8800	-	15,0	89	43200	89,0		–	VTM-Tri 7,5	–

* Three phase speed controllers (RMT) or inverter controllers (VFKB/VFTM): Three phase 400V.

Technical characteristics for models with ALUMINIUM impellers

Model	Speed (r.p.m.)	Maximum absorbed power (W)	Maximum current (A)		Sound pressure level (dB(A))	Maximum air volume (m^3/h)	Weight (kg)	Speed controller		Inverter controllers	
			a 230 V	a 400 V				REB	RMB/T*	VFTM*	VFKB*
THREE PHASE 6 POLE											
TCBT/6-355/H	875	90	0,5	0,3	50	2220	13,2		RMT-1,5	VFTM-Tri 0,37	VFKB-45
TCBT/6-400/H	830	110	0,5	0,3	52	3240	15,5		RMT-1,5	VFTM-Tri 0,37	VFKB-45
TCBT/6-450/H	890	200	0,9	0,5	53	4590	20,7		RMT-1,5	VFTM-Tri 0,37	VFKB-45
TCBT/6-500/H	870	270	1,0	0,6	57	6100	24,8		RMT-1,5	VFTM-Tri 0,37	VFKB-45
TCBT/6-560/L	900	410	1,6	0,9	58	7400	33,0		RMT-1,5	VFTM-Tri 0,37	VFKB-45
TCBT/6-560/H	870	470	1,7	1,0	60	8680	33,5			VFTM-Tri 0,37	VFKB-45
TCBT/6-630/L	890	620	2,2	1,3	60	10600	38,0			VFTM-Tri 0,37	VFKB-45
TCBT/6-630/H	950	860	4,9	2,8	62	13000	38,5			VFTM-Tri 1,1	VFKB-45
TCBT/6-710/L	900	1080	5,7	3,3	66	15800	46,0			VFTM-Tri 1,5	VFKB-45
TCBT/6-710/H	910	1300	5,2	3,0	69	17800	46,0			VFTM-Tri 1,1	VFKB-45
TCBT/6-800/L(1,1kW)	950	1500	5,7	3,3	74	20700	57,0			VFTM-Tri 1,5	VFKB-45
TCBT/6-800/K(1,5kW)	965	1800	7,1	4,1	76	23100	64,0			VFTM-Tri 1,5	VFKB-45
TCBT/6-800/G(2,2kW)	960	2500	9,0	5,2	79	26100	68,0			VFTM-Tri 2,2	VFKB-48
TCBT/6-800/H(3kW)	980	2900	10,7	6,2	80	29800	80,0			VFTM-Tri 3	VFKB-48
THREE PHASE 8 POLE											
TCBT/8-450/H	655	140	0,8	0,5	47	3450	20,7		RMT-1,5	VFTM-Tri 0,37	VFKB-45
TCBT/8-500/H	615	165	1,0	0,6	50	4750	24,8		RMT-1,5	VFTM-Tri 0,37	VFKB-45
TCBT/8-560/H	595	250	1,2	0,7	52	6620	33,0			VFTM-Tri 0,37	VFKB-45
TCBT/8-630/H	680	380	1,9	1,1	57	8730	38,5			VFTM-Tri 0,37	VFKB-45
TCBT/8-710/H	620	540	2,1	1,2	63	11000	46,0			VFTM-Tri 0,37	VFKB-45
TCBT/8-800/L(0,37kW)	700	650	3,1	1,8	67	14000	54,0			VFTM-Tri 0,55	VFKB-45
TCBT/8-800/K(0,55kW)	710	870	4,3	2,5	69	16600	57,0			VFTM-Tri 1,1	VFKB-45
TCBT/8-800/G(0,75kW)	720	1100	4,8	2,8	72	19500	61,0			VFTM-Tri 1,1	VFKB-45
TCBT/8-800/H(1,1kW)	720	1340	6,2	3,6	74	22500	64,0			VFTM-Tri 1,5	VFKB-45

* Three phase speed controllers (RMT) or inverter controllers (VFKB/VFTM): Three phase 400V.

Technical characteristics for models with PLASTIC impellers

Model	Speed (r.p.m.)	Maximum absorbed power (W)	Maximum current (A) at 230 V	Maximum current (A) at 400 V	Sound pressure level (dB(A))	Maximum air volume (m^3/h)	Weight (kg)	Speed controller REB	Speed controller RMB/T*	Inverter controllers VFTM*	Inverter controllers VFKB*
SINGLE PHASE 2 POLE											
TCFB/2-250/H	2500	250	1,2	–	65	2160	5	–	–		
TCGB/2-315/L	2500	380	1,7	–	70	3260	11	–	–		
TCGB/2-355/J	2000	460	2,1	–	71	4000	13,2	–	–		
SINGLE PHASE 4 POLE											
TCFB/4-250/H	1330	60	0,3	–	52	1215	5	REB-1	RMB-1,5		
TCFB/4-315/H	1300	100	0,6	–	54	2350	7	REB-1	RMB-1,5		
TCFB/4-355/H	1225	200	1,0	–	58	3490	8	REB-2,5	RMB-1,5		
TCFB/4-400/H	1200	340	1,6	–	60	5070	9	REB-2,5	RMB-3,5		
TCFB/4-450/H	1290	480	2,3	–	65	6760	13	REB-2,5	RMB-3,5		
TCFB/4-500/H	1290	650	3,0	–	68	9200	16	REB-5	RMB-3,5		
TCFB/4-560/H	1250	980	4,9	–	71	12480	22	–	–		
TCFB/4-630/H	1200	1700	7,6	–	72	17060	25	–	–		
SINGLE PHASE 6 POLE											
TCFB/6-355/H	800	90	0,5	–	50	2210	8	REB-1	RMB-1,5		
TCFB/6-400/H	750	110	0,6	–	52	3400	9	REB-1	RMB-1,5		
TCFB/6-450/H	835	220	1,2	–	53	4550	13	REB-2,5	RMB-1,5		
TCFB/6-500/H	840	290	1,6	–	56	5820	16	REB-2,5	RMB-3,5		
TCFB/6-560/H	900	420	2,4	–	59	7870	22	REB-2,5	RMB-3,5		
TCFB/6-630/H	800	510	2,6	–	60	10750	25	REB-5	RMB-3,5		
SINGLE PHASE 8 POLE											
TCFB/8-450/H	625	130	0,7	–	48	3500	13	REB-1	RMB-1,5		
TCFB/8-500/H	605	160	0,9	–	49	4660	16	REB-1	RMB-1,5		
TCFB/8-560/H	610	240	1,3	–	51	5990	22	REB-2,5	RMB-1,5		
TCFB/8-630/H	585	320	1,7	–	52	8340	25	REB-2,5	RMB-3,5		
THREE PHASE 2 POLE											
TCFT/2-250/H	2500	250	0,9	0,5	65	2160	5			VFTM-Tri 0,37	VFKB-45
TCGT/2-315/G	2600	400	1,4	0,8	70	3250	11			VFTM-Tri 0,37	VFKB-45
TCGT/2-355/I	2380	520	1,6	3	71	4000	13,2			VFTM-Tri 1,1	VFKB-45
THREE PHASE 4 POLE											
TCFT/4-250/H	1330	60	0,3	0,2	52	1220	5		RMT-1,5	VFTM-Tri 0,37	VFKB-45
TCFT/4-315/H	1300	150	0,6	0,3	54	2350	7		RMT-1,5	VFTM-Tri 0,37	VFKB-45
TCFT/4-355/H	1260	200	0,8	0,5	58	3490	8		RMT-1,5	VFTM-Tri 0,37	VFKB-45
TCFT/4-400/H	1350	300	1,4	0,8	60	5070	9		RMT-1,5	VFTM-Tri 0,37	VFKB-45
TCFT/4-450/H	1230	500	1,7	1,0	65	6760	13		RMT-1,5	VFTM-Tri 0,37	VFKB-45
TCFT/4-500/H	1350	660	2,7	1,6	68	9200	16		RMT-2,5	VFTM-Tri 0,55	VFKB-45
TCFT/4-560/H	1320	1210	3,9	2,3	71	12480	22			VFTM-Tri 1,1	VFKB-45
TCFT/4-630/H	1420	1550	5,2	3,0	72	17060	25			VFTM-Tri 1,1	VFKB-45
THREE PHASE 6 POLE											
TCFT/6-355/H	875	90	0,5	0,3	50	2210	8		RMT-1,5	VFTM-Tri 0,37	VFKB-45
TCFT/6-400/H	830	110	0,5	0,3	52	3400	9		RMT-1,5	VFTM-Tri 0,37	VFKB-45
TCFT/6-450/H	835	190	0,8	0,5	53	4550	13		RMT-1,5	VFTM-Tri 0,37	VFKB-45
TCFT/6-500/H	840	250	0,9	0,5	56	5820	16		RMT-1,5	VFTM-Tri 0,37	VFKB-45
TCFT/6-560/H	900	410	1,6	0,9	59	8260	22		RMT-1,5	VFTM-Tri 0,37	VFKB-45
TCFT/6-630/H	910	530	2,2	1,26	60	11000	25		RMT-1,5	VFTM-Tri 0,37	VFKB-45
THREE PHASE 8 POLE											
TCFT/8-450/H	660	130	0,7	0,4	51	3500	13		RMT-1,5	VFTM-Tri 0,37	VFKB-45
TCFT/8-500/H	625	150	0,7	0,4	53	4660	16		RMT-1,5	VFTM-Tri 0,37	VFKB-45
TCFT/8-560/H	610	230	1,0	0,6	55	5990	22		RMT-1,5	VFTM-Tri 0,37	VFKB-45
TCFT/8-630/H	635	310	1,3	0,8	57	8340	25		RMT-1,5	VFTM-Tri 0,37	VFKB-45

* Three phase speed controllers (RMT) or inverter controllers (VFKB/VFTM): Three phase 400V.

Dimensions (mm)

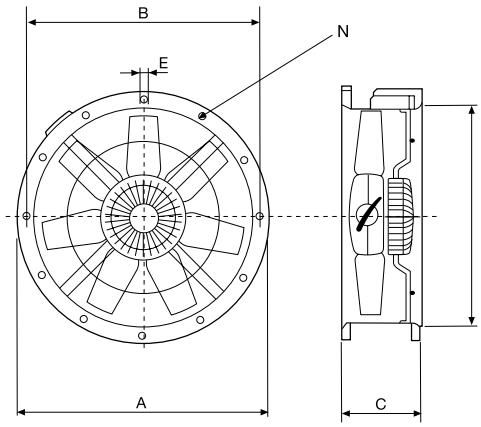

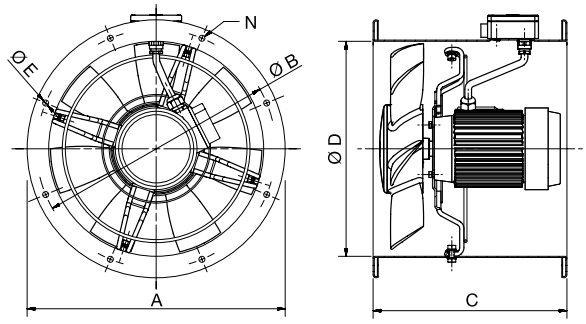

Models TCBT-B/2-315/H
TCBT-B/2-355/H

Model	Ø A	Ø B	C	Ø D	Ø E	Number of holes N
250	327	292	170	254	10	4
315	386	355	170	315	10	8
355	426	395	170	355	10	8
400	487	450	170	400	12	8
450	537	500	180	450	12	8
500	595	560	180	500	12	12
560	655	620	240	560	12	12
630	725	690	240	630	12	12
710 (6 and 8 poles)	806	770	240	710	12	16

Model	Ø A	Ø B	C	Ø D	Ø E	Number of holes N
TCBT-B/2-315/H	386	355	320	315	10	8
TCBT-B/2-355/H	426	395	320	355	10	8

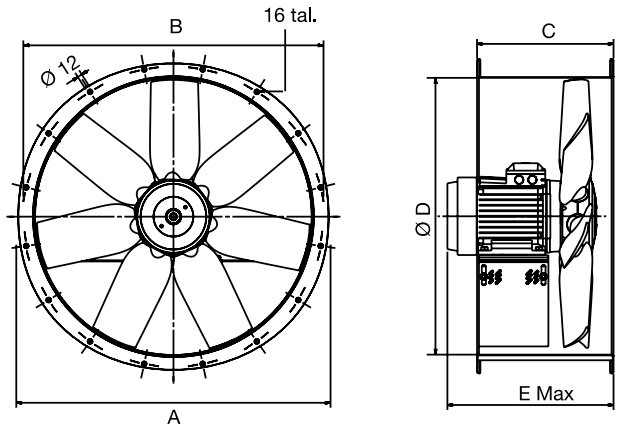

Model	Ø A	B	C	Ø D	E		
					4 poles	6 poles	8 poles
710/L (4 poles)	806	770	350	710	415	–	–
710/H (4 poles)	806	770	350	710	444	–	–
800/L	896	860	350	800	437	408	383
800/K	896	860	350	800	448	437	408
800/G	896	860	350	800	447 (5,5kW) 515 (7,5kW)	448	437
800/H	896	860	350	800	515	477	437

Mounting accessories

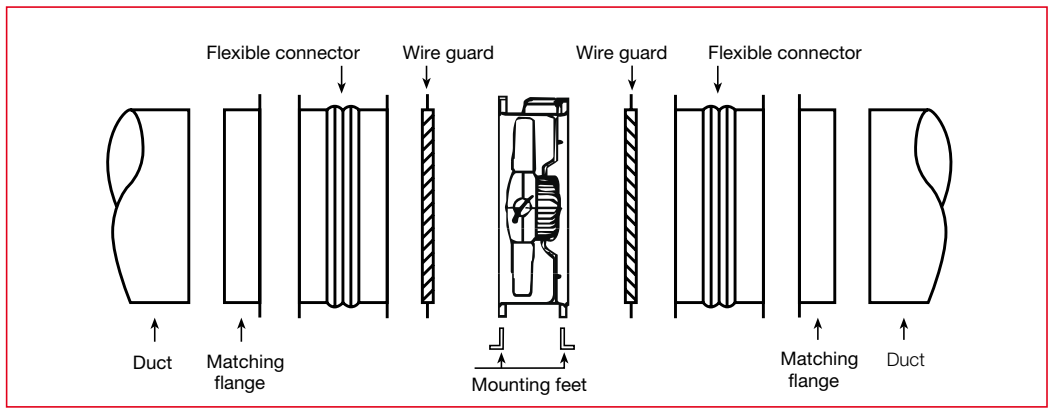

Electrical accessories

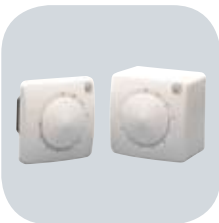

REB-1N / REB-2,5N
Single phase electronic speed controllers

REB-5 / REB-10
Single phase electronic speed controllers

RMB / RMT
Single and three phase auto transformer speed controllers

COM D/S
Three phase fan Y / Δ switch

VFKB IP65
Adjustable frequency drives for three phase motors from 0,37 to 4 kW 400 V

VFTM IP54
Adjustable frequency drive for three phase motors from 0,37 kw to 230V or 400V

Performance curves - TCBB/TCBT Series

– Q = Air volume in, m^3/hr and m^3/s.
– Ps = Static pressure in mmWG and Pa.
– Dry air at 20ºC and 760 mmHg.
– Performance data in accordance with ISO 5801 and AMCA 210-99 Standards.

Performance curve characteristics for the Compact cased axial fans with plastic impellers (TCFB/T) correspond with the curves illustrated for the Compact Plate Axial fans.

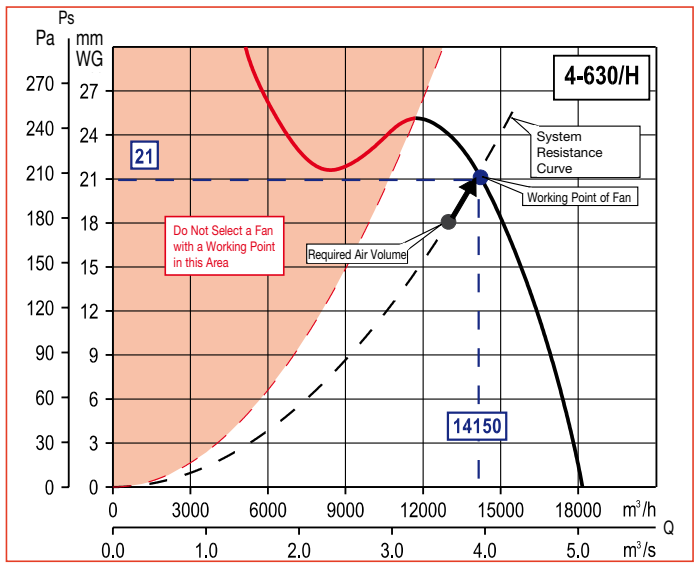

Typical fan selection:

Do not select the working point in the coloured area. To find the working point it is first necessary to plot the system resistance curve. The working point lies at the intersection between that curve and the fan performance curve.

Example: Required air volume 13.100 m^3/h at 18 mmWG
Fan working point 14.150 m^3/h at 21 mmWG

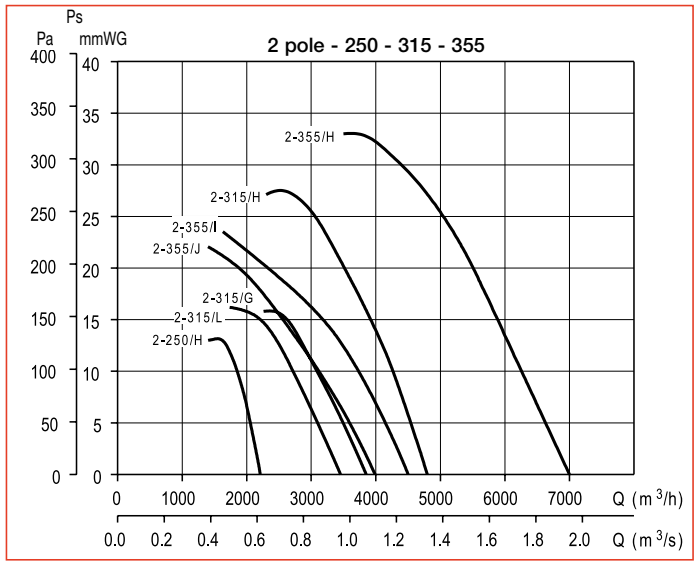

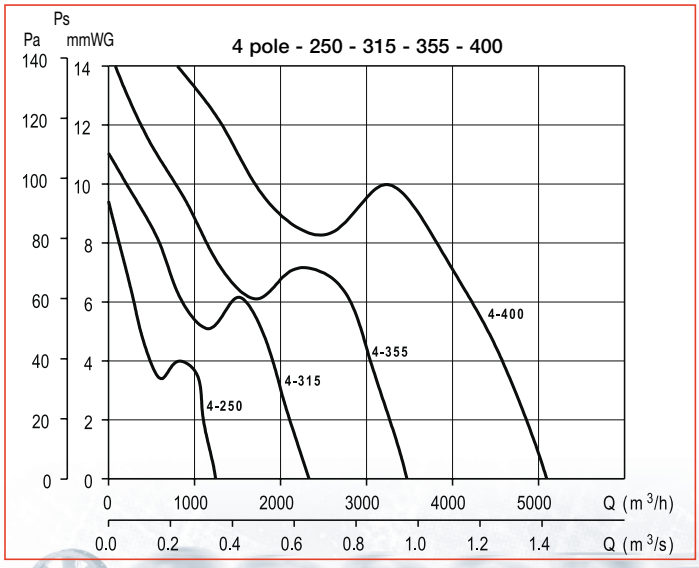

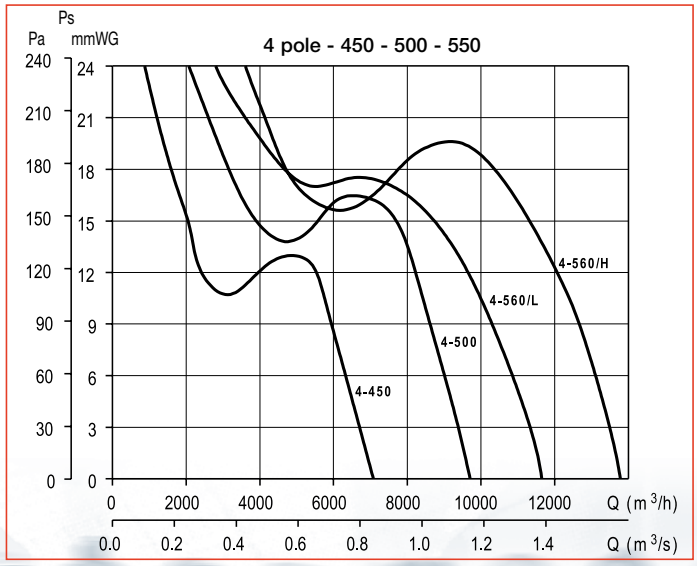

Performance curves - TCBB/TCBT Series

– Q = Air volume in, m^3/hr and m^3/s.
– Ps = Static pressure in mmWG and Pa.
– Dry air at 20ºC and 760 mmHg.
– Performance data in accordance with ISO 5801 and AMCA 210-99 Standards.

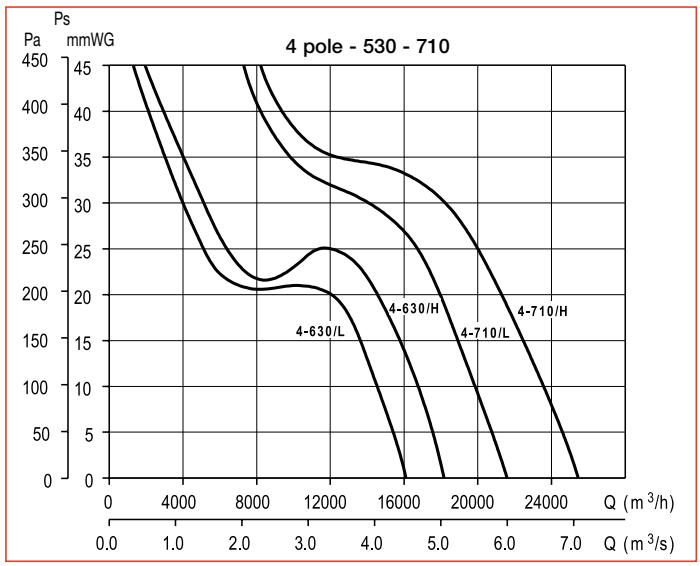

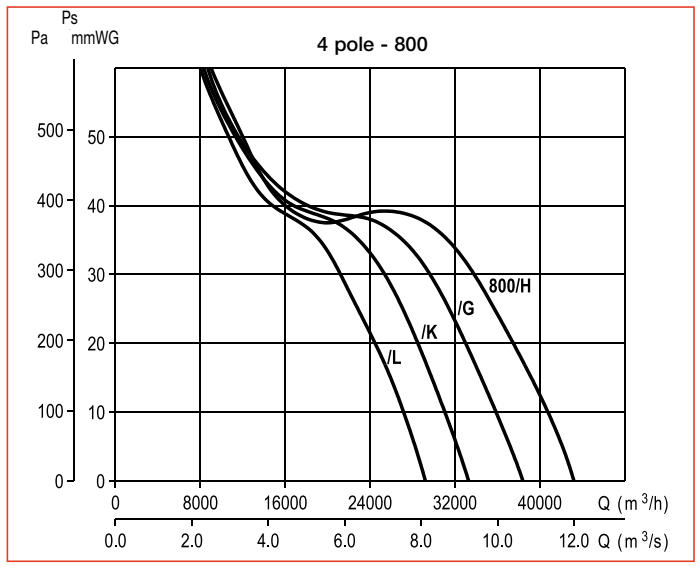

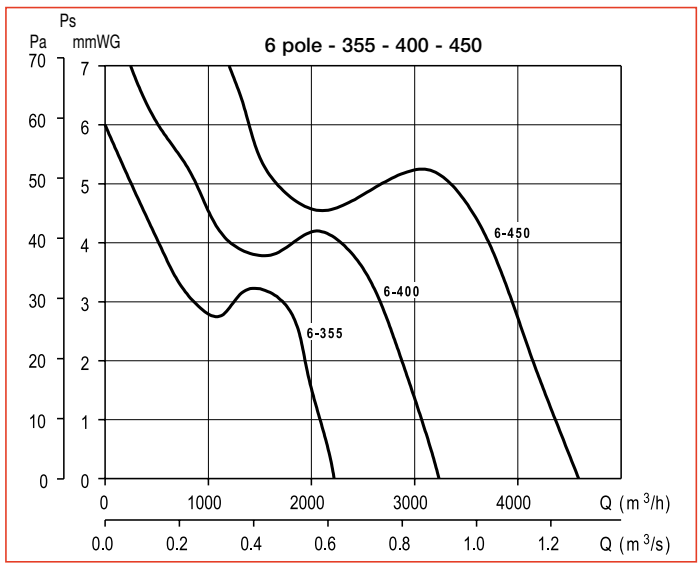

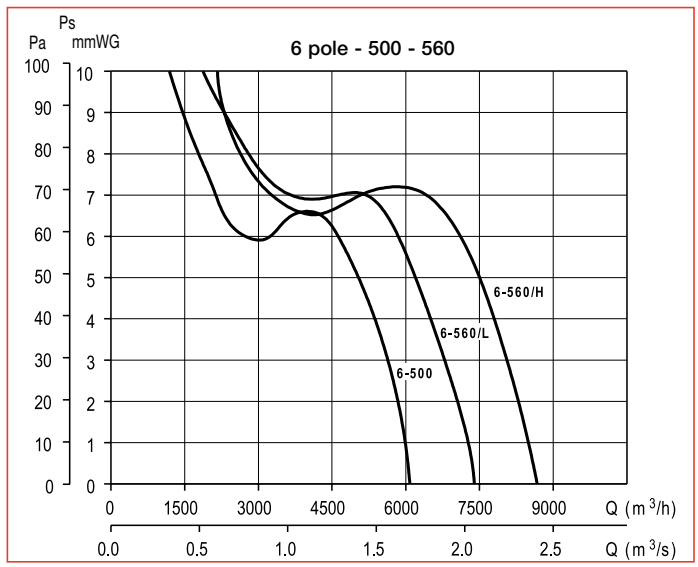

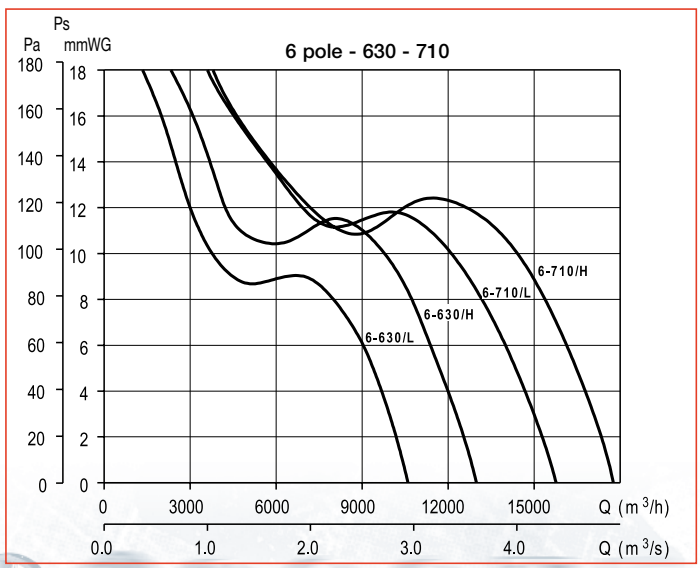

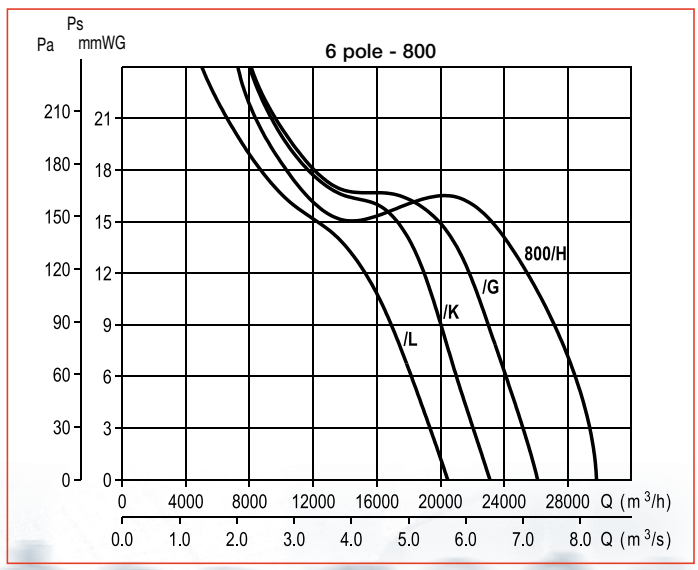

Performance curves - TCBB/TCBT Series
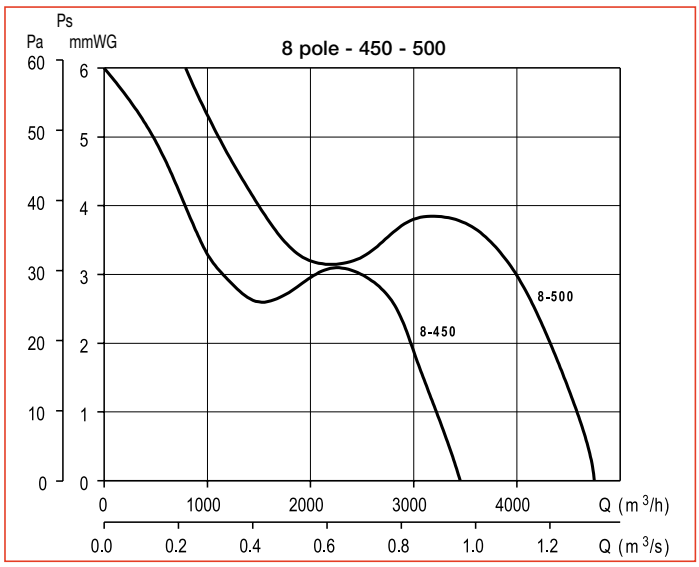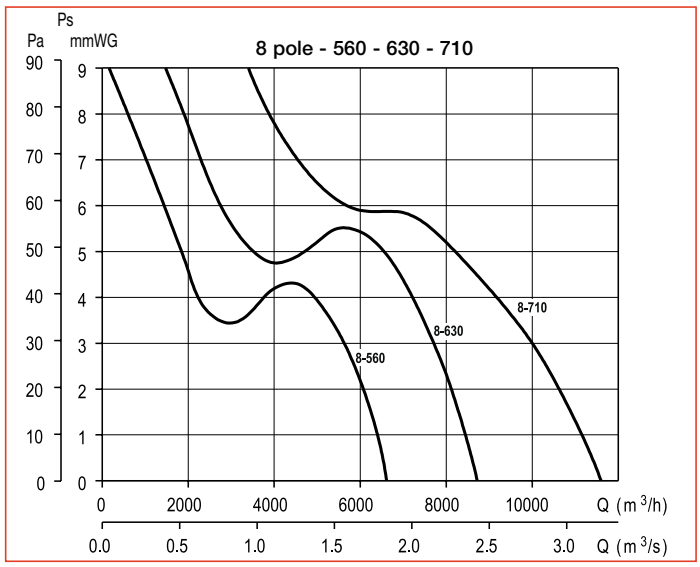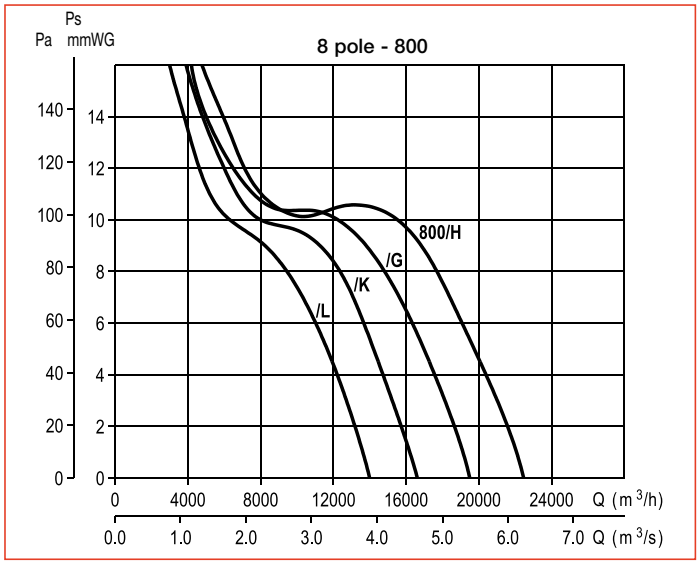
– Q = Air volume in, m^3/hr and m^3/s.
– Ps = Static pressure in mmWG and Pa.
– Dry air at 20ºC and 760 mmHg.
– Performance data in accordance with ISO 5801 and AMCA 210-99 Standards.