Broad Oak Tree Consultants Limited
Laurel House, Burwash Road, Broad Oak, Heathfield, East Sussex TN21 8SS
Tel: 01435 862444 Email: broadoaktrees@btconnect.com

ARBORICULTURAL METHOD STATEMENT
AND
REVISED TREE PROTECTION PLAN

FOR

EXTENSIONS, INTERNAL REMODELLING AND EXTERNAL WORKS

AT

PURBROOK PARK SCHOOL
PARK AVENUE
PURBROOK
WATERLOOVILLE
HAMPSHIRE

By

Tim Laddiman
B.Sc.(Hons) M.I.C.For. M.Arbor.A.
Chartered Arboriculturist

Council: Havant Borough Council
Planning Application No: APP/14/00687
Status: Granted subject to conditions
Conditions Covered by this Statement: 2, 7 (part), 8, 9, 10, 18 (part)

Our Ref: J48.58
20th November 2014

CONTENTS

		Page No.
1.	INTRODUCTION	1
2.	GENERAL	2
3.	ARBORICULTURAL WORKS	3
4.	TREE PROTECTION MEASURES – FENCING	4
5.	TREE PROTECTION MEASURES – GROUND PROTECTION	5
6.	REMOVAL OF EXISTING HARD LANDSCAPING	5
7.	SITE OPERATIONS AND LOGISTICS	5
8.	SERVICES/DRAINAGE	5
9.	NEW/REPLACEMENT SURFACING WITHIN TREE RPAS	6
10.	SPECIFIC AREAS OF REFERENCE FOR PRECAUTIONARY MEASURES	6
11.	ARBORICULTURAL SUPERVISION OF WORKS	7
12.	SUMMARY	8

APPENDICES:

1. TREE PROTECTION PLAN, DRAWING NO. J48.58/03 Rev. B
2 EXAMPLES OF FENCING SPECIFICATION AND SIGNAGE

1. INTRODUCTION

Broad Oak Tree Consultants Ltd. received instructions through MH Architects to provide the arboricultural information necessary to meet the requirements of specific conditions, and parts of conditions, in relation to the Grant of Consent for Application No. APP/14/00687 issued by Havant Borough Council.

The conditions covered in this Arboricultural Method Statement are numbers 2, 7 (part), 8, 9, 10 and 18 (part). These conditions read as follows:

2 No development hereby permitted shall commence until plans showing, in relation to the existing trees and other vegetation proposed to be retained, the layout of all foul and surface water drainage and other underground services proposed to serve that development have been submitted to and approved in writing by the Local Planning Authority.
Reason: *To safeguard against undue damage to existing trees and/or other vegetation at and in the vicinity of the site and having due regard to policies CS11and DM8 of the Havant Borough Local Plan (Core Strategy) 2011 and the National Planning Policy Framework 2012.*

7 Notwithstanding the details submitted, the bin store area hereby permitted shall not be provided/constructed unless and until positioning of the bin store has been amended to allow for the planting of a hedge to the northern site boundary (details of which to be provided under condition 5), the revised details shall show full details of the proposed enclosure, details of hard surfacing proposed together with an arboricultural impact and tree protection specification. The enclosure shall thereafter be provided/constructed fully in accordance with the approved scheme.
Reason: *In the interests of the character of the area, the amenities of nearby residents and to ensure the protection of existing trees having due regard to policies CS11, CS16, DM8 and DM10 of the Havant Borough Local Plan (Core Strategy) 2011 and the National Planning Policy Framework 2012.*

8 The facilitation works to the off site Holm Oak shown as T3 on the Tree Constraints Plan Drawing Number J48.58/01 Sheet 1 shall not take place until full details of the works are submitted to and approved in writing by the Local Planning Authority. The works shall thereafter be carried out solely in accordance with the approved details.
Reason: *To ensure that the works to the tree are carried out in accordance with best Arboricultural practice and in the interests of the character and appearance of the area having due regard to policies CS11 and DM8 of the Havant Borough Local Plan (Core Strategy) 2011 and the National Planning Policy Framework 2012.*

9 The development shall not commence unless and until an arboricultural impact assessment and tree protection plan in relation to the Horse Chestnut tree shown as T77 on the Tree Constraints Plan drawing number J48.58/01 Sheet 1 has been submitted to and approved in writing by the Local Planning Authority. The development shall thereafter be carried out solely in accordance with the approved details.
Reason: *To protect the tree during the course of the development In the interests of the character and appearance of the area having due regard to policies CS11 and DM8 of the Havant Borough Local Plan (Core Strategy) 2011 and the National Planning Policy Framework 2012.*

10 *No development hereby permitted nor any related site clearance shall commence until a specification of measures to be undertaken to prevent damage to existing trees/trees and hedgerows on the site throughout implementation of the same has been submitted to and approved in writing by the Local Planning Authority. All measures forming part of such approved specification shall be undertaken and fully adhered to at all times which such implementation is in progress. Any such tree/tree or hedgerow which is nevertheless seriously damaged during that implementation shall be replaced within 6 months of the occurrence of such damage by another of the same species in the same position and of not less than 1.6 metres height when planted.*
Reason: *To safeguard the continued health and presence of such existing vegetation and protect the amenities of the locality and having due regard to policies CS11 and CS16 of the Havant Borough Local Plan (Core Strategy) 2011 and the National Planning Policy Framework 2012.*

18 *The proposed electricity sub station to the western side of the site shall not be erected unless and until full details of the precise siting and design of the sub station together with an arboricultural impact assessment and arboricultural method statement and associated landscaping proposals have been submitted to and approved in writing by the Local Planning Authority. The development shall thereafter be carried out in full accordance with the approved scheme.*
Reason: *At the time of the planning decision the precise details of this element of the development are not confirmed and in order for the Local Planning Authority to maintain control over the development in the interests of the visual amenities of the area and to ensure that important trees are not compromised by the development having due regard to policies CS11, CS16 and DM8 of the Havant Borough Local Plan (Core Strategy) 2011 and the National Planning Policy Framework 2012.*

2. GENERAL

Details of tree protection measures, tree surgery and tree removal have previously been covered in the Broad Oak Tree Consultants Ltd. “Arboricultural Implications Assessment Report” dated 23rd June 2014 and submitted as part of the original planning application. However, to provide a comprehensive overview of permissioned work interactions with the trees on the site and to account for additional information required as part of various listed conditions, this information is included in the Arboricultural Method Statement for clarification purposes. The combination of all works with the potential to impact on trees in one Statement and associated TPP with the requirements of Condition 10.

This Arboricultural Method Statement sets out the methodology for proposed works with the potential to affect trees. Compliance with this Arboricultural Method Statement will be a requirement of all relevant contracts associated with the development. All contractors will be responsible for undertaking their own risk assessments with regard to any of the works detailed in this Arboricultural Method Statement. The arboriculturally related documents to be referred to in conjunction with this statement are as follows:

- BS5837:2012 “Trees in Relation to Design, Demolition and Construction - Recommendations” hereinafter referred to as BS5837:2012.
- BS3998:2010 “Tree Work Recommendations”, hereinafter referred to as BS3998:2010.
- NJUG Volume 4 “Guidelines for the Planning, Installation and Maintenance of Utility Apparatus in Proximity to Trees” ” hereinafter referred to as NJUG Volume 4.
- Broad Oak Tree Consultants Ltd. drawing no. J48.58/03 Rev. B “Tree Protection Plan”, hereinafter referred to as the TPP. A copy is included in Appendix 1.

3. ARBORICULTURAL WORKS

The following tree works relate specifically to the works associated with the main building complex of the school. Tree works in relation to the playing field redevelopment have been addressed under separate submission related to that application.

Tree safety works identified in the above referenced Broad Oak Tree Consultants Ltd. Arboricultural Implications Assessment report of 23rd June 2014 are not specific to the planning permission but are listed below as certain trees will have the potential to impact on contractors if not actioned by the school.

Tree Safety Works

Tree No.	Species	Works required
T2	Laburnum	Fell.
T10	Scots Pine	Deadwood crown
T20	Sycamore	Fell.
T22	Sweet Chestnut	Remove lowest limbs to S.
T24	Sweet Chestnut	Remove lowest limbs to S.
T28	Hazel	Fell.
T36	Hawthorn	Fell.
T39	Sycamore	Fell.
T43	Sycamore	Fell.
G45	Sycamore	Fell all.
T51	Elm	Fell.
T53	Hawthorn	Fell.
T66	Lime	Fell.
T71	Sycamore	Reduce crown all over by one third height/branch length.
T81	Robinia	Remove torn out limbs.
T82	Norway Maple	Install brace in upper crown.
T85	Ornamental Cherry	Raise crown to 2m over footpath.
T89	Common Oak	Fell.

The trees listed for removal and presumed to be within the site boundary of the school are indicated with red dashed crown outlines on the TPP. Other trees would be subject to confirmation/negotiation with adjoining owners.

Trees for removal - redevelopment

The permissioned layout requires the removal of the following tree:

T56 Sycamore

This tree is indicated for removal on redevelopment grounds with a blue dashed crown outline on the TPP.

Facilitation pruning

The overhanging crown of the offsite Holm Oak, T3, requires facilitation pruning to minimise potential contact issues with site traffic and to provide an appropriate construction and maintenance separation from the permissioned new building.

The following works to the Holm Oak, T3, are recommended:

- Raise crown base to south over school grounds to 5m clearance from ground level.
- Reduce back crown over school grounds by a maximum of 3m total branch length and shape to blend with offsite crown.

The above specification provides the information required for Condition 8.

An appropriately qualified and insured tree surgery company will undertake all recommended felling and tree surgery works to the requirements of BS3998:2010.

No other trees/shrubs are to be removed or pruned without reference to the Arboricultural Consultant.

No fires or chip piling to occur within 5m of the drip line of any tree canopy or within 15m of any tree stem, whichever is the further.

For reasons of operator safety it is recommended that all tree clearance and tree works recommended above are completed prior to erection of protective tree fencing.

Prior to tree surgery/felling works commencing, the trees for works should be checked for the presence of nesting birds or bats. Disturbance of nesting birds or bats could represent an offence and result in prosecution under the Wildlife and Countryside Act 1981.

4. TREE PROTECTION MEASURES – FENCING

Protective fencing is to be erected once arboricultural works have been completed and prior to commencement of demolition. The location and appropriateness of the fencing will be confirmed to the Local Authority by the arboricultural consultant. All fencing will remain in place until completion of construction and any hard landscaping. Access to protected areas will only be allowed on foot for the motor manual break out and removal of areas of existing hard surfacing.

The protective fencing is to comply with Section 6.2 “Barriers and Ground Protection” of BS 5837:2012. Fencing will be constructed of a braced scaffold framework with uprights driven into the ground to a minimum depth of 0.6m and at no greater than 3m spacing. On to the framework, weldmesh panels will be securely mounted with all-weather notices attached to every fifth panel, reading “Keep Out – Protected Area” or similar. The fencing will form enclosed areas to which no access will be allowed.

The storage of potentially injurious materials such as fuels, oils, chemicals and cement will be kept at least 10m for any stem or in a bunded storage vessel. No changes in level will occur, either increases or decreases within the protective fencing areas.

Examples of fencing specification and signage are included in Appendix 2.

5. TREE PROTECTION MEASURES – GROUND PROTECTION

To allow for safe working space in areas of restricted access and around structures, it will be necessary for the set back of fencing to occur where indicated by hatching on the TPP. Ground protection measures to comply with Section 6.2.3 “Ground protection during demolition and construction” of BS5837:2012. The area shown hatched on the TPP is to be covered in a geotextile, over which 100mm of woodchip is to be placed, topped with minimum 12mm thickness non slip surfaced man made boards or side butting scaffold boards. Alternatively 50cm-100cm of Type 1/MOT could be used instead of woodchip provided it is retained at the edges to facilitate easy removal post construction. Ground protection to be installed and removed at the same time as protective fencing.

6. REMOVAL OF EXISTING HARD LANDSCAPING

Access to the enclosed protective fencing will only be allowed for the manual removal of loose gravel, vegetation and existing surfacing around the trees where such materials are indicated for removal/replacement on submitted landscape plans.

No machinery apart from hand operated hammer drills or kango style breakers will be allowed access to fenced areas with wheelbarrows for removal of any arising material.

Once works are completed, the fenced areas will be re-secured to prevent casual access.

7. SITE OPERATIONS AND LOGISTICS

Reference is to be made to the MH Architects “Site Logistics Section 1 and Section 2” drawings, drawing no. 108 Rev. T1 and 109 Rev T1. These indicate areas for contractor access, parking, compounds and materials routing which avoid retained tree protection areas and minimise potential conflicts.

8. SERVICES/DRAINAGE

In accordance with the requirements of Condition 2 plans indicating the routing of all new services and drainage have been produced by Henderson Green Ltd. and Caulmert and submitted separately. The Caulmert drawings relating to drainage incorporate tree RPA information and the Henderson Green Ltd. proposal drawings for external electrical services will be updated to include tree RPAs.

The following Caulmert drawings should be referred to in relation to drainage layouts in relation o trees:

- Proposed Drainage Layout (Sheets 1-3), drawings nos. 1910.PPS 203, 204 and 205.

The Henderson Green Ltd. drawings of relevance in relation to trees to be referred to are:

- External Services Layout – Proposed external lighting, drawing no. E2(XT)215
- External Services Layout – Proposed trenching and ducts, drawing no. E2(XT)213
- Block A Extension – Site Plan Preliminary external mechanical services modifications, drawing no. M3(XT)351.

For all contractors a copy of this Arboricultural Method Statement will be supplied and wherever any proposed routes pass through indicated tree RPAs or areas protected by tree protection fencing all excavation works will be undertaken to NJUG Volume 4 requirements. All such works will be supervised by the Arboricultural Consultant.

9. NEW/REPLACEMENT SURFACING WITHIN TREE RPAS

Any new/replacement surfacing within indicated retained tree RPAs, as indicated on the TPP, are to be installed manually with hand tools and hand operated machinery only, under the supervision of the Arboricultural Consultant. For parking spaces 29-41 the no dig specification included on the Caulmert "External works surfacing details", drawing no. 1910.PPS.250 is to be adhered to.

All such works are to accord with the recommendations contained in Section 7.4 "Permanent hard surfacing within the RPA" of BS5837:2012.

10. SPECIFIC AREAS OF REFERENCE FOR PRECAUTIONARY MEASURES

The following sections relate to the additional detailing required in relation to Conditions 7, 9 and 18.

Bin Store – Condition 7

The indicated bin store location occupies an area currently covered in part by grass to the west and concrete to the east. Surfacing associated with the bin stores will have no impact on the root protection areas (RPAs) of T3 Holm Oak or T4 Sycamore.

The bin store footprint is outside the indicated RPA of T3 and therefore excavation of the grass to form the surfacing for the bin store will have no impact. For T4 replacement of the existing concrete with new surfacing within the RPA will have no impact with existing sub base levels retained and reused with no disturbance to underlying rooting areas.

Breakout for the bin store surfacing and hedge planting to be undertaken by manually operated breakers only with no machinery passage over exposed soil. The breakout of the existing surfacing will be supervised by the Arboricultural Consultant. Tree protection fencing and ground protection measures are indicated on the TPP.

Horse Chestnut T77 – Condition 9

The permissioned works involve the removal of the existing car park surfacing within the theoretical RPA to the east and the installation of metal railings within the RPA.

The existing surfacing to the east of the tree, including tarmac surfacing, paving and kerbs is to be removed by manually operated breakers only and hand tools. All arisings will be removed by hand and replaced with topsoil.

The existing kerbing will have restricted shallow root presence and thus its careful removal is unlikely to cause any root damage. The breakout of the existing surfacing and kerbs will be supervised by the Arboricultural Consultant.

The railings to be installed will require minimal size hand tool or manually operated auger excavation to install the support rails and secure with concrete. Contractors will only dig the minimum size hole necessary and the potential for damage of significance to occur to tree roots is minimal, given the railing alignment and anticipated spacing of support rails.

Sub Station – Condition 18

Details of the submission design will have been submitted by others.

Foundations to the sub station will be to the minimum depth allowable within accepted standards for such structures.

All excavations for the foundations will be undertaken by hand tools only. Any roots encountered will be neatly cut back to the excavation face nearest the trees to minimise wound size and tissue exposure. This methodology will accord with Section 7.2 “Avoiding physical damage to the roots during demolition and construction” of BS5837:2012.

All excavations for the cable routes will be undertaken by hand tools only and in accordance with NJUG Volume 4.

Foundations and cabling excavations will be supervised by the Arboricultural Consultant to ensure required methodologies and standards are complied with to minimise root disturbance.

11. ARBORICULTURAL SUPERVISION OF WORKS

Once all tree works have been completed and tree protection measures installed a precommencement site meeting will be arranged with the Arboricultural Consultant, Site Manager and Council Tree Officer to review the measures and confirm the Site Manager’s understanding of their responsibilities and within the context of the Arboricultural Method Statement.

The Arboricultural Consultant will undertake monthly inspections of the site and produce a written statement/photographs to the Council’s Trees Officer confirming the condition of the site and protective measures, any reportable infringements of protection areas and details of any mitigation measures necessary. Monitoring will continue until construction and the soft landscaping have been completed.

In addition, the Arboricultural Consultant will provide confirmation of completion in compliance with this Method Statement of the following works:

- Installation of no dig parking bays.
- Any excavations required with retained tree RPAs.

12. SUMMARY

The information contained within this Arboricultural Method Statement and on the attached TPP is considered appropriate to meet the requirements of Conditions 2, 7 (part), 8, 9, 10 and 18 (part) of the Grant of Consent of Application No. APP/14/00687.

Tim Laddiman
Chartered Arboriculturist
Broad Oak Tree Consultants Ltd.

APPENDIX 1

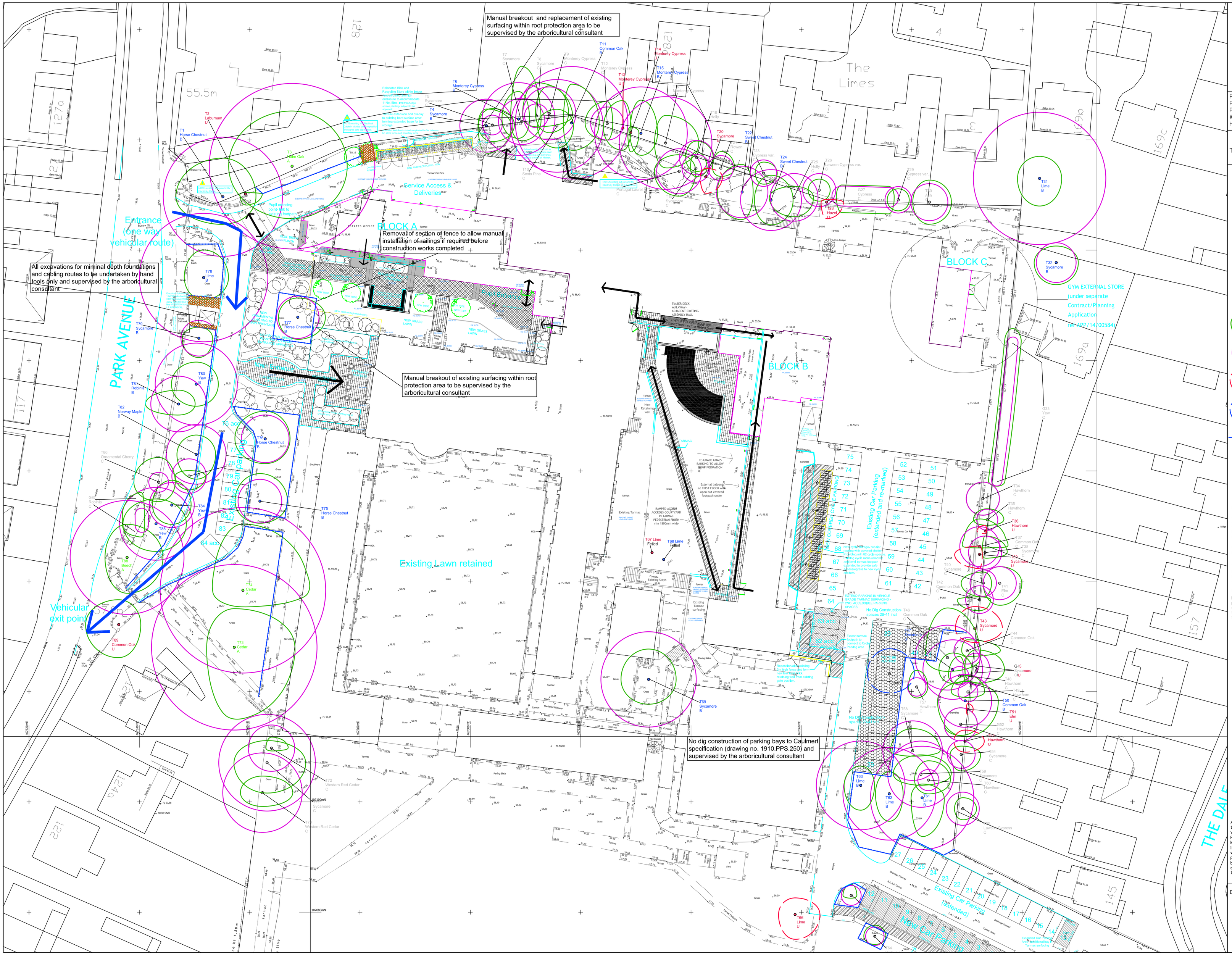
Manual breakout and replacement of existing surfacing within root protection area to be supervised by the arboricultural consultant
Removal of section of fence to allow manual installation of railings if required before construction works completed
All excavations for miminal depth foundations and cabling routes to be undertaken by hand tools only and supervised by the arboricultural consultant
Manual breakout of existing surfacing within root protection area to be supervised by the arboricultural consultant
No dig construction of parking bays to Caulmert specification (drawing no. 1910.PPS.250) and supervised by the arboricultural consultant
Entrance (one way vehicular route)
Vehicular exit point
PARK AVENUE
BLOCK A
BLOCK B
BLOCK C
Service Access & Deliveries
Existing Lawn retained
The Limes
THE DALE
GYM EXTERNAL STORE (under separate Contract/Planning Application ref: APP/14/00584)
Existing Car Parking (extended and re-marked)
Existing Car Parking (extended)
T1 Horse Chestnut B
T2 Laburnum U
T3 Holm Oak A
T4 Sycamore B
T6 Monterey Cypress B
T11 Common Oak B
T14 Monterey Cypress
T15 Monterey Cypress B
T19 Monterey Cypress U
T20 Sycamore
T22 Sweet Chestnut B
T24 Sweet Chestnut B
T26 Hazel
T31 Lime B
T32 Sycamore B
T67 Lime Felled
T68 Lime Felled
T69 Sycamore B
T75 Horse Chestnut B
T76 Horse Chestnut B
T77 Horse Chestnut B
T78 Lime B
T79 Sycamore B
T80 Yew B
T82 Norway Maple B
T84 Yew B
T85 Yew B
T86 Ornamental Cherry C
T88 Beech A
T89 Common Oak U
T73 Cedar A
T74 Cedar A
T63 Lime B
T62 Lime B
T61 Lime B
T66 Lime U
T43 Sycamore U
T36 Hawthorn U
T50 Common Oak B
T51 Elm U
T52 Hawthorn U
T46 Common Oak C
T37 Hawthorn C
T34 Hawthorn C
T35 Hawthorn C
T41 Elm
T42 Common Oak C
T40 Sycamore
T44 Common Oak C
T45 Hawthorn C
T49 Sycamore C
T54 Sycamore C
T59 Sycamore C
T60 Hawthorn C
T72 Western Red Cedar C
55.5m
64 acc
Pupil crossing point link to Primary toilets
Relocated Bins and Recycling Store within timber enclosure to accommodate 1100L Bins and overhanging screen panels, subject to planning permission
No building hard surface area forming extended base for bin storage
Proposed new bin enclosure
Proposed new cycle shelter
Proposed new cycle racks
Existing Tarmac
Existing Lawn
New Retaining wall
RE-GRADE GRASS BANKING TO ALLOW RAMP FORMATION
External balcony at FIRST FLOOR with open but covered footpath under
RAMPED ACCESS ACCROSS COURTYARD IN TARMAC PEDESTRIAN FINISH min 1800mm wide
Existing Steps
Existing Tarmac surfacing
Proposed new cycle racks
Proposed new cycle shelter
EXTEND PARKING IN VEHICLE GRADE TARMAC SURFACING - 2NO. ACCESSIBLE PARKING SPACES
No Dig Construction- approx 29.41 incl.
Extend tarmac footpath to connect to Cycle Parking area
Reposition existing railing. Top rail bend and form new 1800mm wide railing wall from existing gate position.
Existing Car Parking Area Re-marked
Existing Car Parking Area Re-surfaced and re-marked
Existing Car Parking Area Re-surfaced and re-marked by Tarmac surfacing
TIMBER DECK WALKWAY- ADJACENT EXISTING ASSEMBLY HALL
Existing Tarmac surfacing
Existing Tarmac surfacing
Existing Tarmac surfacing

APPENDIX 2

BS5837:2012: FENCING SPECIFICATIONS

Figure 2 **Default specification for protective barrier**

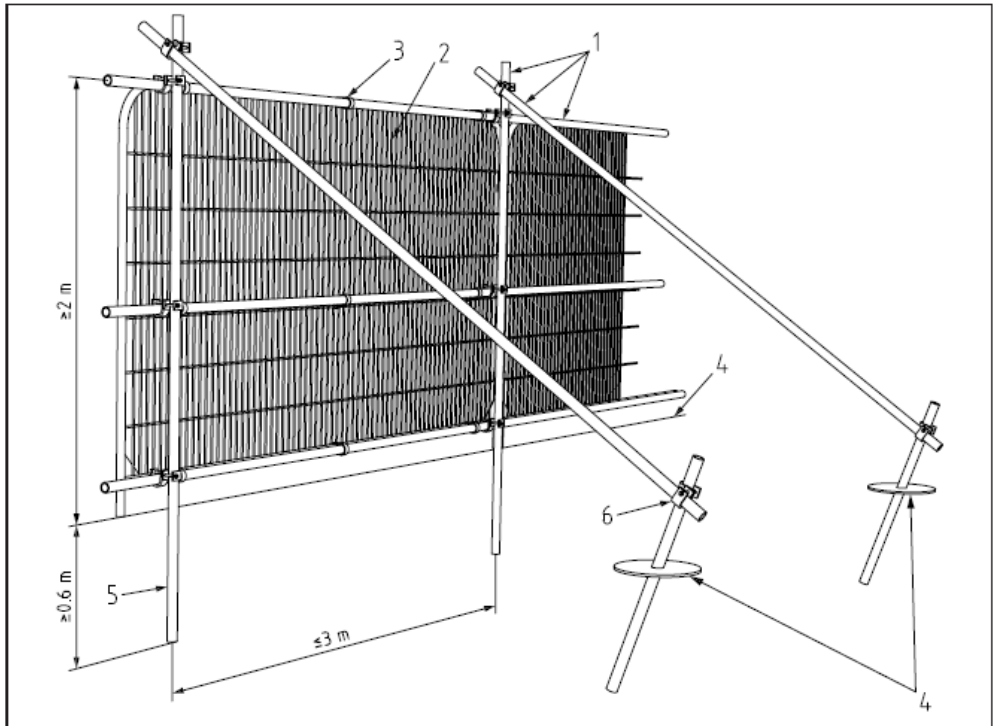

Key

1 Standard scaffold poles
2 Heavy gauge 2 m tall galvanized tube and welded mesh infill panels
3 Panels secured to uprights and cross-members with wire ties
4 Ground level
5 Uprights driven into the ground until secure (minimum depth 0.6 m)
6 Standard scaffold clamps

Figure 3 **Examples of above-ground stabilizing systems**

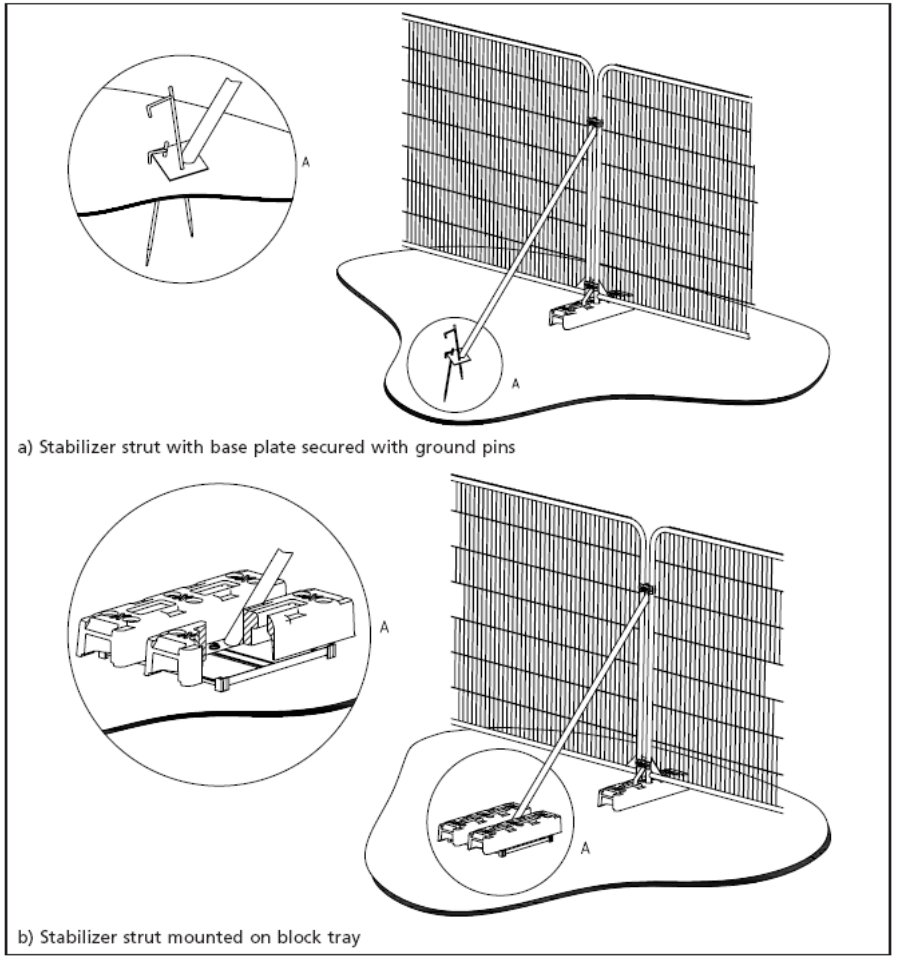

a) Stabilizer strut with base plate secured with ground pins

b) Stabilizer strut mounted on block tray

EXAMPLE OF FENCING SIGNAGE