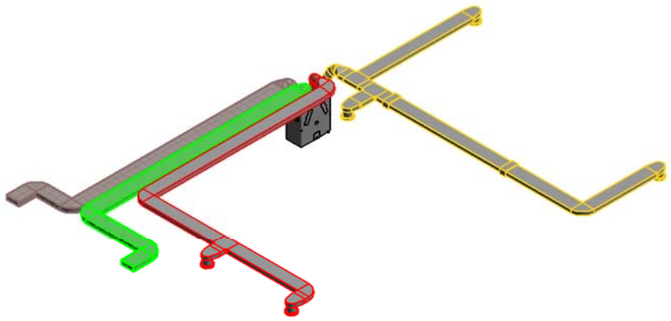

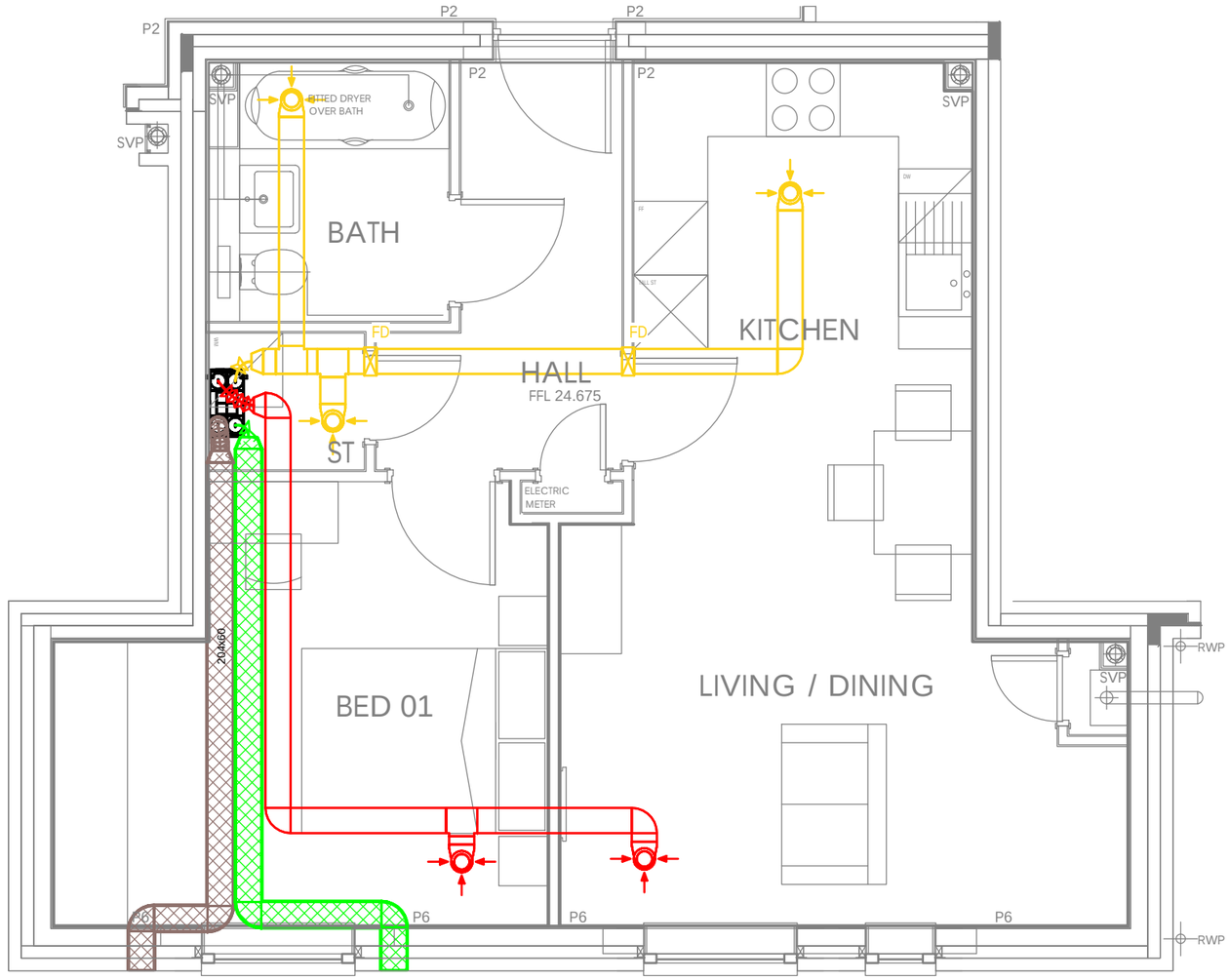

PLOT 62
FLAT TYPE 3

PLOTS 62, 64, 67, 70, 72, 74, 77

COMMISSIONING TABLE

	Boost (l/s)	Trickle (l/s)
Kitchen	13.0	6.6
Utility	8.0	4.1
Bathroom	8.0	4.1
	29.0	14.8

	Boost (l/s)*	Trickle (l/s)
Living Area	15.4	7.9
Bedroom 1	13.6	6.9
	29.0	14.8

* Supply Boost shown based on optimum balanced rates.
Only Trickle Supply rates listed as required in Doc F regs.

NOTES

THIS SYSTEM PROPOSAL HAS BEEN DESIGNED TO COMPLY WITH THE CURRENT BUILDING REGULATIONS - MEANS OF VENTILATION.

THE SYSTEM MUST BE INSTALLED AND COMMISSIONED WITH GOOD INSTALLATION PRACTICE AND AS PER THE DESIGN SPECIFICATION.

VENT-AXIA CANNOT GUARANTEE SYSTEM COMPLIANCE IF ALTERNATIVE DESIGN IS USED OR INSTALLED BY OTHERS. THE COMMISSIONED SYSTEM MUST COMPLY WITH THE LATEST EDITION I.E. BS7671 WIRING REGULATIONS.

VENT-AXIA WILL NOT BE RESPONSIBLE FOR CONSEQUENCES OUTSIDE OUR CONTROL CAUSED BY THE SYSTEM INSTALLATION E.G. PROPERTY ACOUSTICS, STRUCTURAL INTEGRITY ETC.

THIS DESIGN PROPOSAL HAS BEEN PRODUCED IN GOOD FAITH, BUT IS SUBJECT TO APPROVAL BY THE PROJECT CLIENT.

THE DESIGN IS SUBJECT TO COPYRIGHT AND MUST NOT BE ALTERED, AMENDED OR INCORPORATED IN ANYWAY WHATSOEVER, NOR SHALL IT BE REPRODUCED IN WHOLE OR IN PART WITHOUT THE EXPRESS PERMISSION OF VENT-AXIA.

UNIT IS TO RUN AT CONTINUOUS TRICKLE WITH BOOST BEING ACTIVATED VIA A TRICKLE / BOOST CONTROLLER AND LOCAL BOOST SWITCHES (EG LIGHTS) IN ALL WET ROOMS. IF SWITCHING VIA LIGHTS, DOUBLE POLE SWITCHES OR RELAYS (E.G. VA 442030) WILL BE REQUIRED. LOCAL SWITCHING NOT SPECIFICALLY REQUIRED FOR INTEGRAL HUMIDISTAT UNITS.

EXHAUST AND INTAKE DUCTING TO AND FROM ATMOSPHERE AND ALL DUCTING IN COLD ROOF SPACE TO BE DUCTED VIA FULLY INSULATED RIGID PLASTIC DUCTING TO EXTERNAL TERMINATIONS (INSTALLED BY OTHER).

ALL CENTRAL MVHR UNITS AND MEV UNITS IN COLD ROOF SPACES TO HAVE A CONDENSATE DRAIN TO RUN TO THE NEAREST INTERNAL WASTE SYSTEM (BY OTHER).

THE DESIGN ASSUMES THAT THE CEILING VOIDS ARE SUFFICIENT TO ACCOMMODATE THE DUCTING.

Ref	Date	Dgnr	Details
B	5.8.14	RMB	Change duct type to 204x60 flatduct
A	25.7.14	AH	New background layout

Vent-Axia

New Build Residential

Fleming Way, Crawley West
Sussex
Tel. +44(0)1293 441520
Fax. +44 (0)1293 539209

Project
Bedhampton

Drawing
Flat Type 3_MVHR System

Date	Scale	Design	Checked
19/05/14	1 : 50@A3	AH	

Drawing No.	Sheet No.	Rev
CAS 4527_ 12	01	B