ConSole – PERMIT

600,000 ConSoles in Europe



www.UbbinkSolar.com, Cologne, Germany

ConSole – Mounting without drilling holes into the roof



ConSole – Mounting in one hour / kWp

ubbink SOLAR

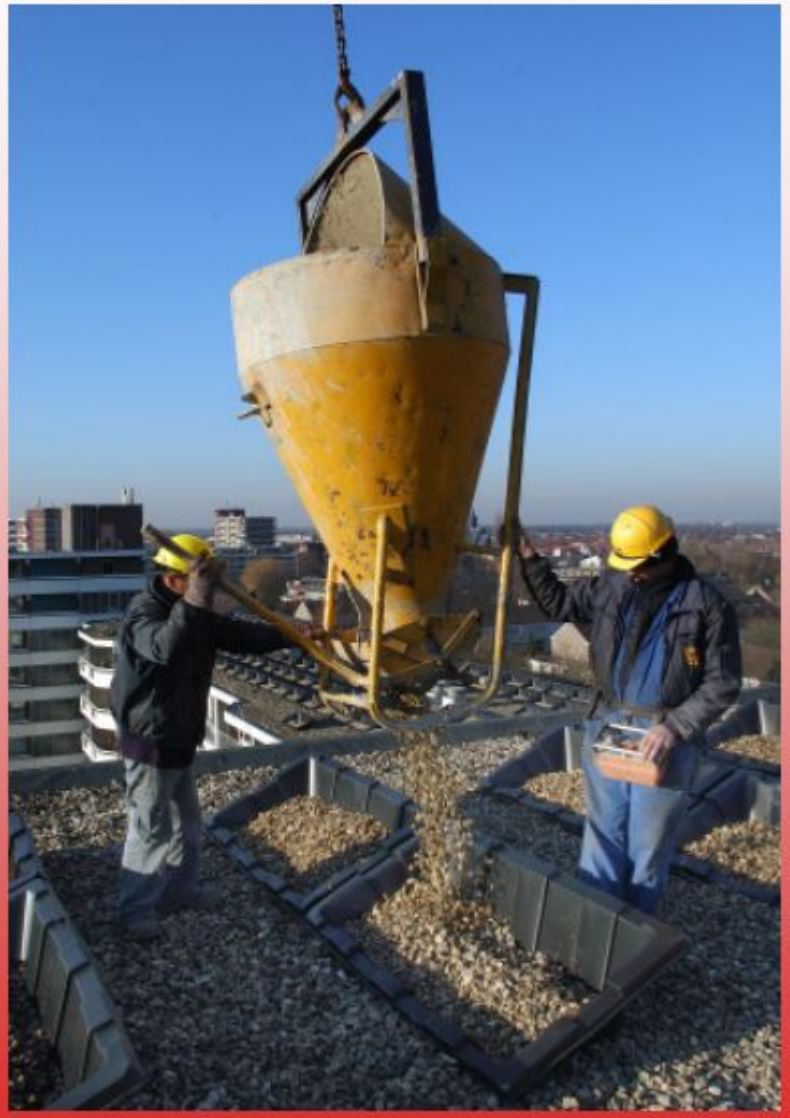



ConSole – Mounting in one hour / kWp

ubbink SOLAR



ConSole – Distances

ConSole:

2.1 / 2.2 / 2.3 / 4.1	> **1,2 m**
3.1	> **1,0 m**
4.2	> **1,5 m**

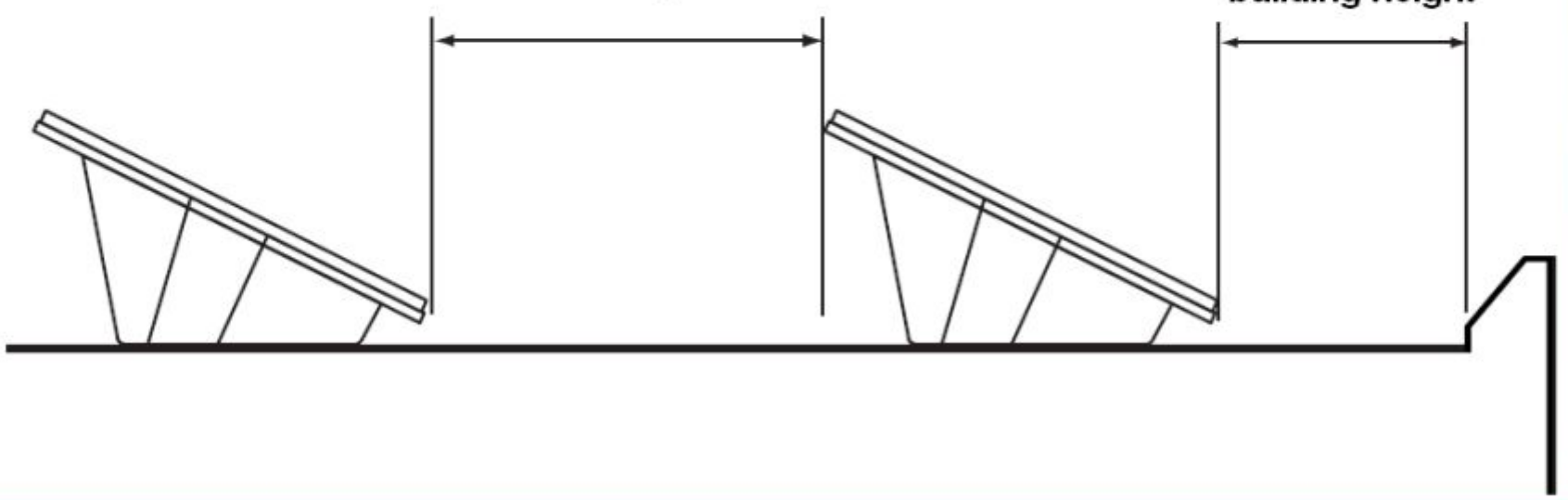

Ideal tilt angle for flat roofs: 25 °

ConSole – Mounting of the modules:

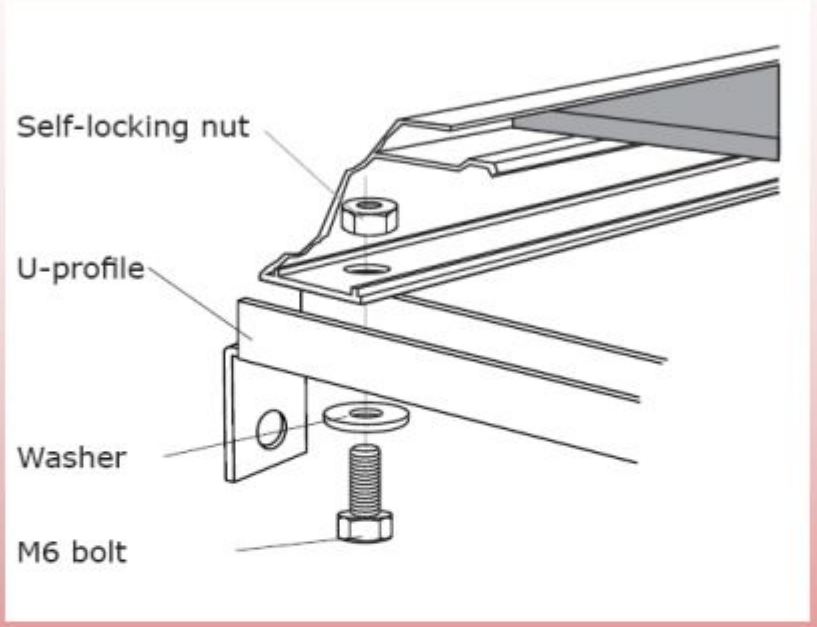

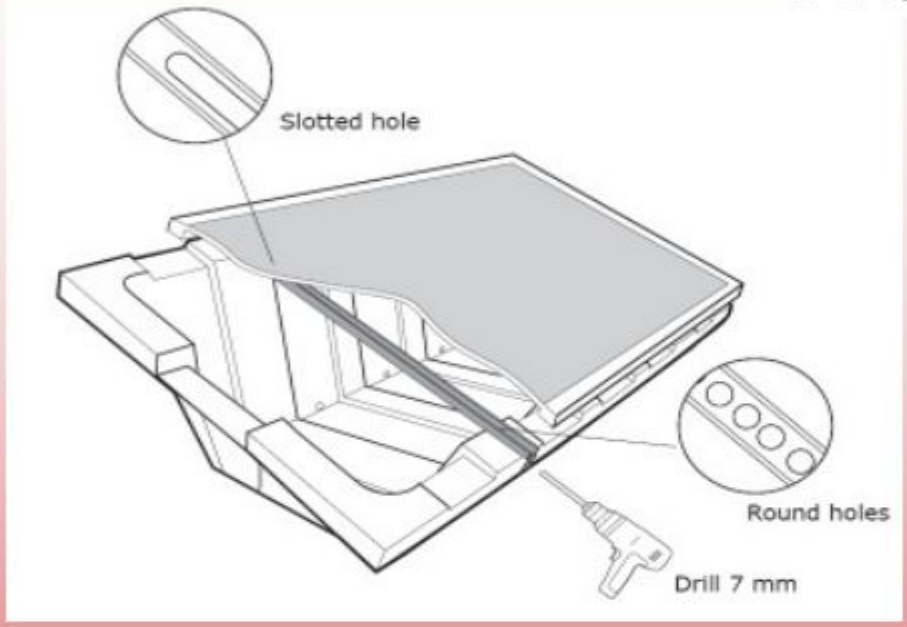

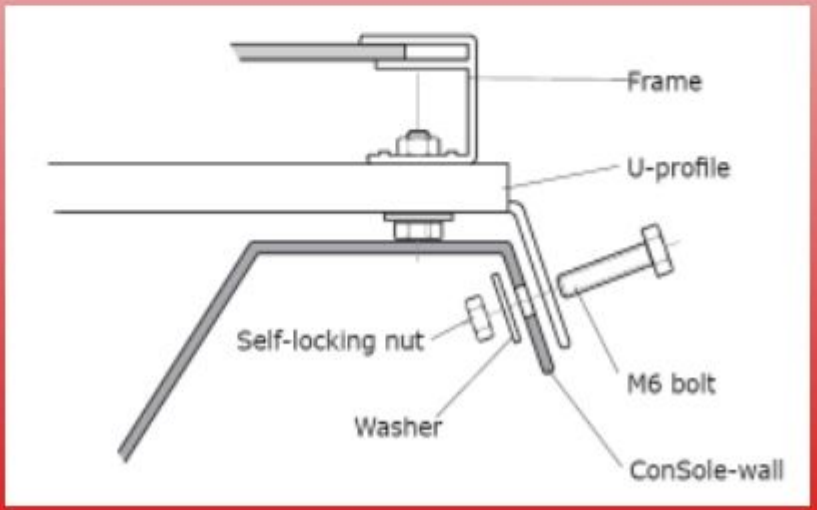

- **Easy !**
- **Only 8 screws/module**

What module on which ConSole ?

- **Meter distance between holes "d"**

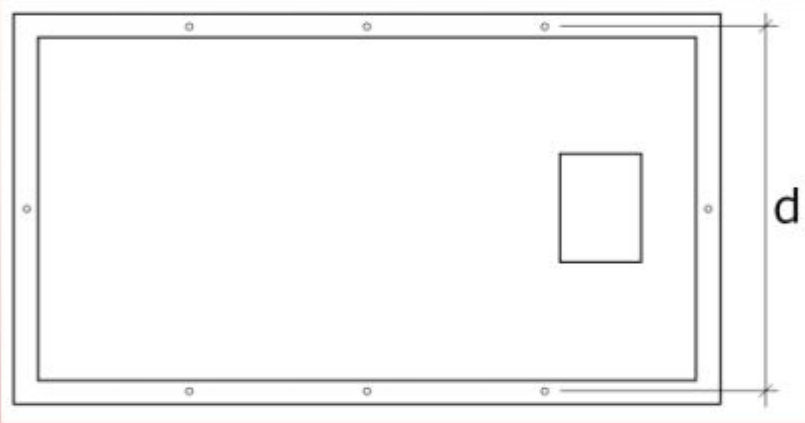

- **Check the table for ConSoles compatible with the width of your module**

„d"	ConSole 2.1	ConSole 2.2	ConSole 2.3	ConSole 4.1	ConSole 4.2	ConSole 6.2
531 - 591 mm		•				
591 - 651 mm	•	•				
651 - 661 mm	•	○				
661 - 711 mm	•	○		•		
711 - 721 mm	○	○		•		
721 - 781 mm	○		•	•		
781 - 841 mm			•	○		
841 - 851 mm			○	○		
851 - 895 mm			○			
895 - 911 mm			○		•	•
911 - 1015 mm					•	•
1015 - 1085 mm					○	○

○ = Elongation kit necessary

What module on which ConSole ?

- **Choose the type of ConSole that is most compatible with the length of your module**

	A	B	C	D
ConSole 2.1	135	73	44	10
ConSole 2.2	144	67	39	10
ConSole 2.3	125	86	48	9
ConSole 4.1	160	80	45	8,5
ConSole 4.2	120	105	55	8
ConSole 6.2	168	105	55	8

(measurements in cm)

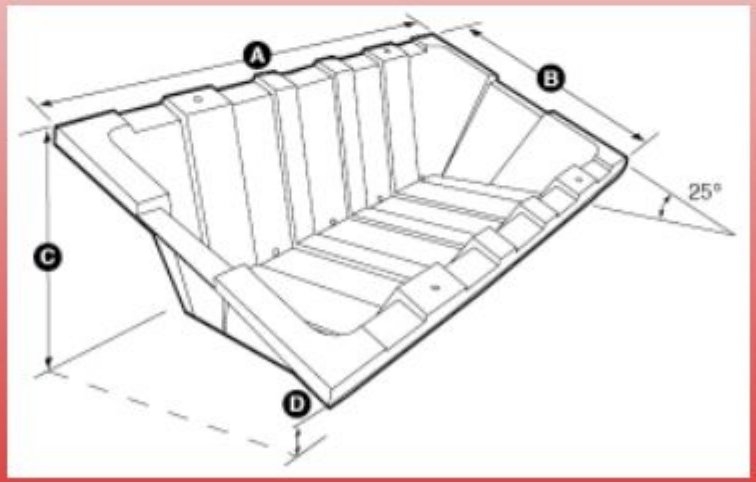

- **For all standard modules up to ca. 260 Wp**

Wind zones in Germany

ubbink SOLAR



Wind Force

- Reference wind speed = 22,5 m/s (9 Beaufort)
- Reference wind speed = 25,0 m/s (10 Beaufort)
- Reference wind speed = 27,5 m/s (10 Beaufort)
- Reference wind speed = 30,0 m/s (11 Beaufort)

Terrain categories in Germany

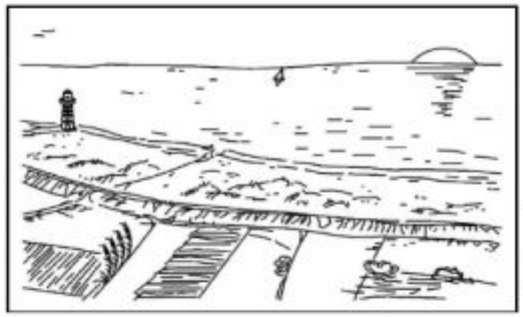

Terrain category I:
Sea;

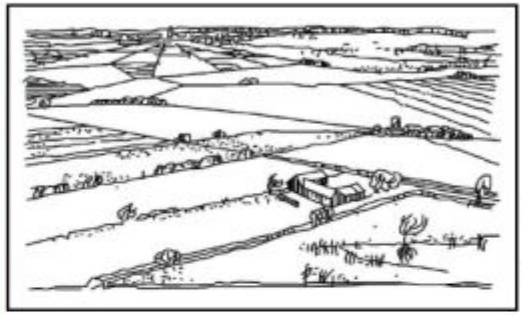

Terrain category II:
agricultural area

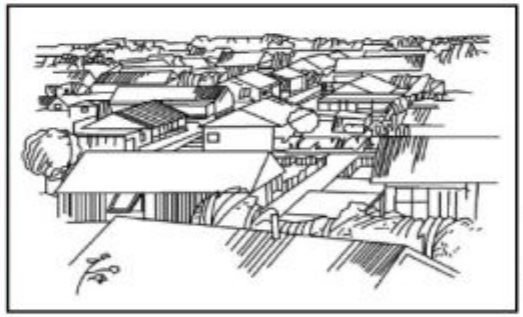

Terrain category III:
suburban

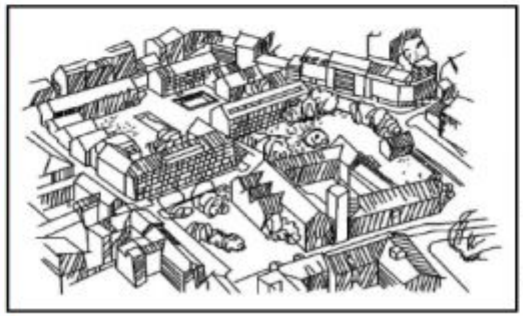

Terrain category IV:
urban

ubbink SOLAR

ConSole –
Necessary ballast in Germany



ubbink SOLAR

Required Ballast Values for ConSoles in Germany (kg) According to DIN 1055-4:2005-03 Reference wind speed of 22,5 m/s, wind zone 1 Suburban terrain category class 3						
Building Height	**up to 8 meters**		**12 meters**		**16 meters**	
	Shielded	Exposed	**Shielded**	Exposed	**Shielded**	Exposed
ConSole 2.1	**50**	78	**59**	91	**66**	101
ConSole 2.2	**46**	73	**55**	86	**61**	95
ConSole 2.3	**51**	82	**60**	96	**68**	106
ConSole 4.1	**62**	99	**73**	115	**82**	128
ConSole 4.2	**58**	94	**68**	110	**77**	122
ConSole 6.2	**83**	134	**98**	156	**110**	173

- Please be aware that for higher reference wind speeds more ballast should be added.
- Values are calculated for German inland wind conditions. To comply with the local circumstances and locally applicable norms, we advise consultation with an approved construction engineer.

ConSoles on slightly tilted roofs



Max. roof tilt angle: 5 °

ConSoles on land-fill sites

ubbink SOLAR

Special conditions:

- Thin earth layer (0.6–1.0 m)
- Thin closing foil underneath
- Unstable ground
- No concrete foundation possible
- No rigid metal structures possible



ConSoles on land-fill sites

ubbink SOLAR

Solution with ConSoles:

- Lay-out according to site
- Ground instabilities no problem due to individual support
- Solutions against plant growth

▸11 kWp pilot project realised in summer 2004

▸800 kWp-system realised in 2006



ConSole - Examples

ubbink SOLAR



ConSole - Examples

ubbink SOLAR



ConSole - Examples

ubbink SOLAR



ConSole - Examples

ubbink SOLAR



Church
Mülheim/Ruhr
Germany
Foto: AEM Monning