REFUSE

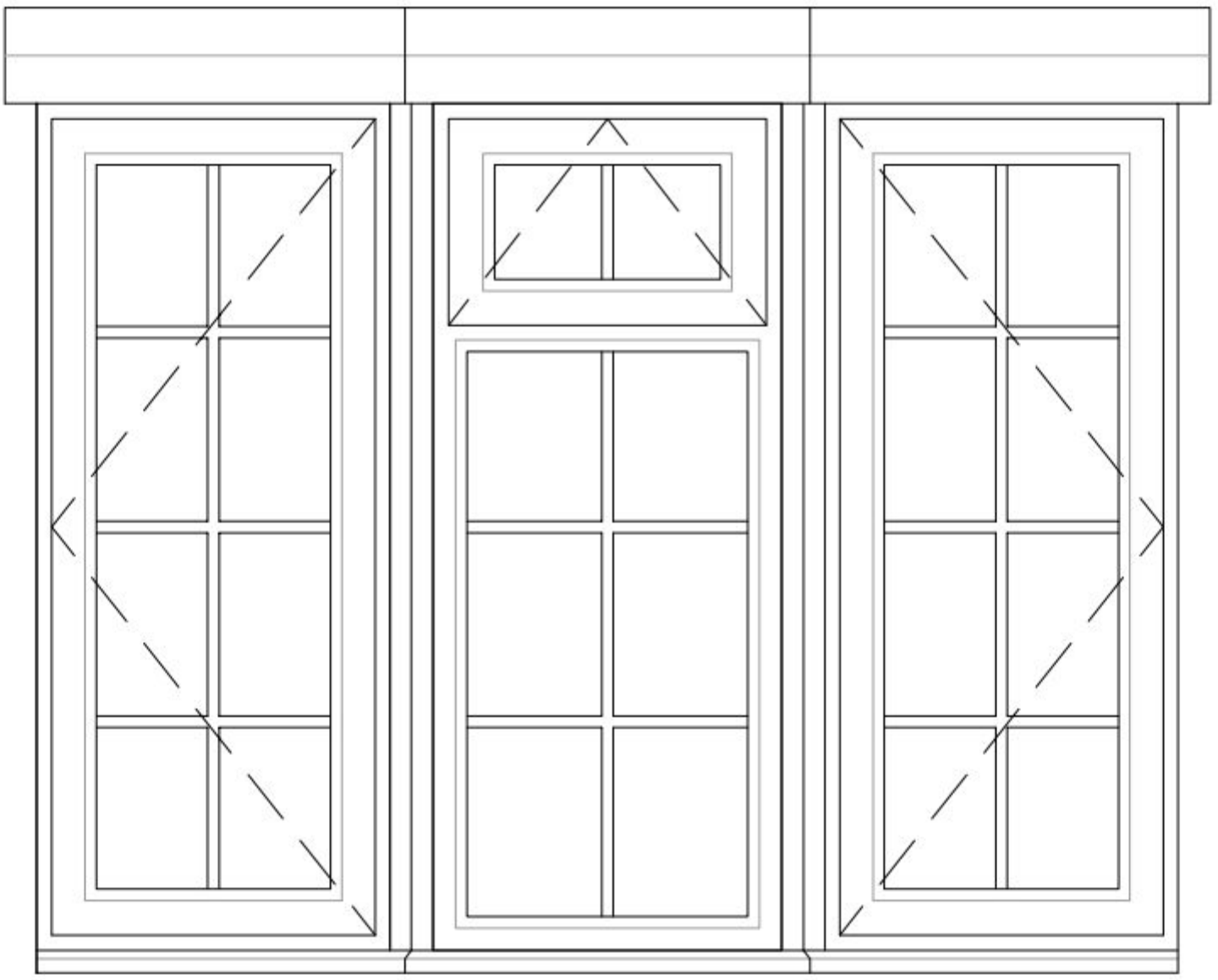

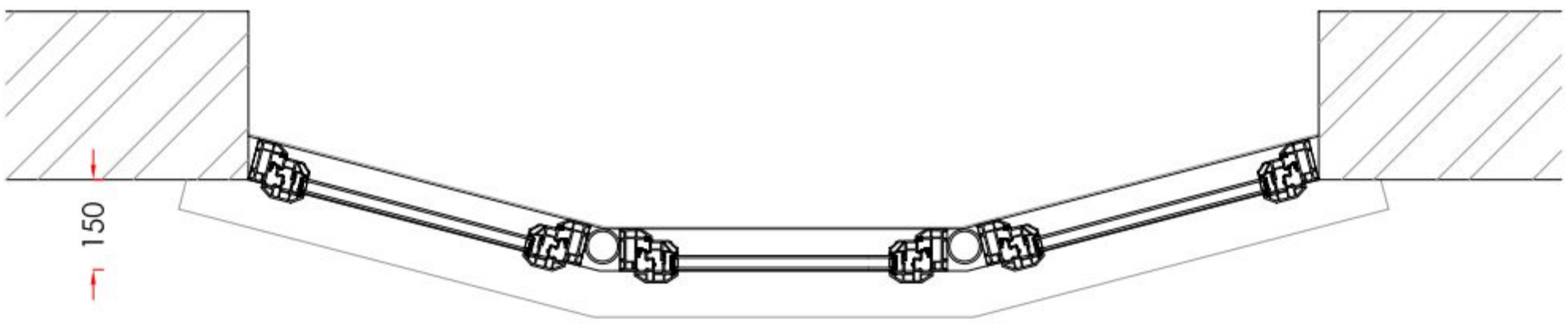

9,10,11. LOUNGE BAY

Scale - 1:10
(Produced on A3 Paper)

Drawers Initials: AA

CONTRACT No.: 01689954 **date:** 07/11/2011

PROPOSED: PROPOSED WINDOW REPLACEMENT

AT: (INSTALLATION ADDRESS) 31 BRIDGEFOOT PATH
EMSWORTH
HAMPSHIRE
PO10 7EB

FOR:..... MRS SPENCER

Anglian Home Improvements
CONSERVATORIES DIVISION
TELEPHONE: 0845 437 3600
FACSIMILE: 01603 480101