10/71427/004

HAVANT BOROUGH COUNCIL
18 FEB 2010
RECEIVED

Connick Tree Consultants

Specialists in Arboricultural Assessment

[redacted]

OUR REFERENCE	88553
CLIENT	Martin Helyer, Helyer Design Ltd, 1 The Old Flour Mill, Emsworth, Hants PO10 7BT
SITE	60 Victoria Road, Emsworth, Hampshire
REPORT BY	Chris Davies F.Arbor.A., Dip.Arb.(RFS)
DATE	22 August 2008

New Pond Farm, Woodhatch Road, Reigate, Surrey, RH2 7QH
Telephone 01737 779191 Facsimile 01737 765775

Contents		Page
	Introduction	2
	Arboricultural Implications Assessment (AIA)	4
	Tree Survey Tables	Appendix 1

Introduction

Helyer Design Ltd on behalf of the homeowner, Mr Howells, has instructed Connick Tree Consultants to undertake a survey of trees relating to a proposal for development at the 60 Victoria Road, Emsworth site and to provide a schedule of trees, including grading their condition and determining the most appropriate means of retaining suitable trees and their protection during construction.

I have been supplied with a copy of a plan of the site. This includes the existing and proposed site layouts.

I confirm that I am a fellow of the Arboricultural Association and hold the Royal Forestry Society Professional Diploma in Arboriculture. I have over 25 years experience in dealing with such matters.

All trees, regardless of their protected status, can be a material consideration in a planning application. This means that where there are trees either on site or within close proximity to the site the Council as Local Planning Authority will consider them when making decisions on planning applications for that site.

In order to help the development process the British Standard BS5837:2005 has recently been updated. In September 2005 the most recent version of the British Standard "Trees in relation to construction - Recommendations" BS5837:2005 came into being. This standard recommends the steps that should be taken to ensure that trees are appropriately and successfully retained when a development takes place.

Inspection was carried out on the basis of ground level, visual examination of external features of each individual tree. The principal objective of the survey was to identify trees, or parts of trees, which appear to be in a hazardous condition and to advise remedial action to ameliorate the risk they could represent to users of the site and adjacent areas.

Visual assessment, in accordance with accepted arboricultural practice, was based on apparent vitality (leaf cover, extension growth), presence of deadwood and die back, fractured and detached limbs, evidence of excessive basal movement and external indications of stem and basal decay likely to affect the structural condition of the tree. Details of all trees noted as requiring action have been supplied separately.

Tree Constraints– trees on and adjacent to the site will have below ground constraints, represented by the Root Protection area (RPA) and this area is defined within the tables at Appendix 1, and the above ground constraints the trees pose by virtue of their size and position. In addition, design details of the proposed physical means of protection should be given.

Tree Protection – this includes the following information:

- The precise location for the erection of protective barriers and any other relevant physical protection;
- The construction method for new hard surfaces

Arboricultural Implications Assessment (AIA) - this takes into account the following and may lead to the requirement of an Arboricultural Method statement.

The recently published "Through the trees to development" by D Patch and B Holding (AAIS Arboricultural Practice Note APN 12) reviews the principles of APN 1 "Driveways close to trees" and reviews where the principles may be applied in practice.

Arboricultural Implications Assessment (AIA)

The presence of statutory protection;

I am unaware of a Tree Preservation Order in respect of trees within the site or within neighbouring land.

Trees and Planning

Local authorities have powers under the Town and Country Planning Act to protect trees and woodlands in the interest of amenity by making Tree Preservation Orders.

With certain exemptions it is not permissible to lop, top, uproot, wilfully damage or destroy a tree covered by a TPO. Planning permission must be sought by the tree owner and permission granted by the planning authority before any works may begin. There are fines of up to £20,000 and more for infringement of this legislation.

Trees that are potentially dangerous or are causing an actionable nuisance may be exempt from the legislation. Trees that do not have an amenity value may also be unworthy of statutory protection.

Local Planning Authorities require justification for tree works before considering the granting of consent. Refusal of consent for tree works or tree removal can be appealed against. Details of Appeal procedures should be included with any refusal of consent.

1. **The effect that the proposals may have on the amenity value of the trees, both on and near the site;**

The proposal is to develop the site by construction of a new house and garages to the left side of 60 Victoria Road. Within the grounds of the land, are ornamental shrubs and Yew tree T2. A Horse Chestnut tree (T1) is located within a neighbouring front garden to the left side. There is an oak tree (T3) and several small Apple and fruit trees within the rear garden of 60 Victoria Drive.

The site has been assessed in relation to tree cover, landscape character & quality and preliminary ecological implications. The trees were inspected and all relevant parameters, i.e. diameter, height, crown spread etc. measured and recorded. This can be cross-referenced with the accompanying tree data tables and survey drawings.

There is a requirement for construction of foundations, buildings, and hard and soft landscaping in the vicinity of trees. These activities would not adversely affect the trees that can be retained within the site providing appropriate measures are taken to protect the trees during the whole construction process and also, with regard to the hard surfaces that are proposed near the bases of these trees. No trees beyond the site would be adversely affected by the development.

Providing appropriate protection is implemented, there are no reasons why the proposed development would have an adverse affect on the retained trees.

Ecology

There is a low degree of ecological interest across the site with the site having been managed as domestic gardens until the recent past. Nesting birds will be present during spring and summer months, mainly within trees and hedges nearby.

As part of due diligence in respect of the Wildlife & Countryside Act, an ecological 'walkover' survey should be undertaken to identify the presence of nesting birds, that would require consideration prior to works commencing on site.

Tree survey data is contained within the tables that supplement this report and these are contained within the Appendices accompanying this document.

2. The above and below ground constraints;

T1 is located within a neighbouring front garden to the left side. T1 is adjacent the location of the proposed new access drive and needs to be protected (if it is planned for retention by its owner). T1 is in poor condition, having been heavily lopped in the past. I consider that this tree is unlikely to survive beyond 10 years due to its poor structural condition, the likelihood of decays developing within the heartwood due to past lopping wounds and the susceptibility of this species to insect and fungal leaf disorders.

Yew T2 is to the rear of the proposed new building, within the boundary. T2 is of low visual amenity value due to its small size. It could be removed, however if it is retained I have included its protection in the plan.

Oak T3 is remote from the proposals; however fencing to create a construction exclusion zone within its root protection area should protect it.

Apple and fruit trees within the rear garden of number 60 should be afforded protection, however these trees are of low visual amenity value and their removal would cause no detriment to the quality of the local landscape.

NOTE: The positioning of the protective fencing will generally be at the edges of any areas for hard surface construction nearest to the retained trees. Beyond the areas of hard surface construction, protective fencing can be placed at the extent of the defined root protection area for each tree.

The construction of the proposed development including the proximity of trees to structures;

Root Protection Areas:

During the development process it is essential that the trees are protected from construction by the creation of exclusion zones. These will be defined by protective fencing and, within these all activity, save authorised tree works, will be prohibited. The root protection areas are described on the attached plan and generally protect the retained trees. In some cases the RPA considers the height or the crown spread of the tree if greater than the radius of the RPA according to the calculations.

This means the exclusion of ***all*** of the following:

NO:
Storage of bricks, sand, aggregate or other materials including debris, rubbish and supplies.

Storage of oil/derv/petrol tanks paints or solvents;

Location of site offices, mess rooms, sanitation etc;

Mixing of cement, mortar or other adhesives;

Fires within 10m of any total exclusion zone;

Parking of machines, vehicles or site traffic;

Storage of topsoil or any other soils, sands etc.

Within (or near as appropriate) these exclusion zones, under any circumstances.

The total exclusion zones should be set out as part of the site set up prior to any development activity on site.

Protective fencing:

The exclusion zones must be designated with protective fencing. The fencing is to be strong enough to resist impacts and suitable to the degree of construction activity on the site. That specified within the BS 5837:2005 is considered adequate.

Alternative fencing such as "Heras" fence panels supported by scaffold poles at the junctions may be acceptable to the Council and have previously been successfully used as tree protection on other larger scale developments..

Barriers should be fit for the purpose of excluding construction activity and appropriate to the degree and proximity of work taking place around the retained tree(s). On all sites, special attention should be paid to ensuring that barriers remain rigid and complete.
In most cases, barriers should consist of a scaffold framework in accordance with Figure 2 comprising a vertical and horizontal framework, well braced to resist impacts, with vertical tubes spaced at a maximum interval of 3 m. Onto this, weldmesh panels should be securely fixed with wire or scaffold clamps. Weldmesh panels on rubber or concrete feet are not resistant to impact and should not be used.

NOTE : The above is preferred because it is readily available, resistant to impact, can be re-used and enables inspection of the protected area.

Access to the site for construction purposes must be via an agreed designated site access that respects exclusion zones. The building works, site huts and storage areas will be located after discussion with the design team and away from any exclusion zones.

Protective fencing will need to be installed to protect ground around the Root Protection Areas for retained trees from construction activities, and additional ground protection the erection of scaffolding may be required and this is described within BS5837 and involves placing geotextile membrane, scaffold base boards on gravel as ground pads for scaffolding uprights and other means of avoiding compaction, root damage and spillage into the root protection area.

Ground protection to BS5837 may be required within the RPA between the location of the protective fencing and the building. This is to allow construction to occur with no damage to the roots within the RPA in this area.

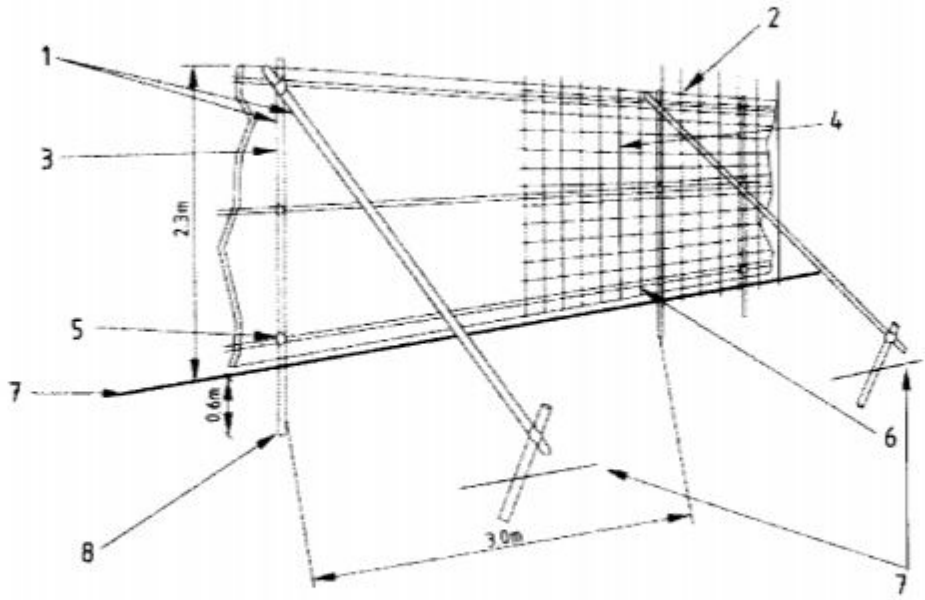

1 Standard scaffold poles
2 Uprights to be driven into the ground
3 Panels secured to uprights with wire ties and where necessary standard scaffold clamps
4 Weldmesh wired to the uprights and horizontals
5 Standard clamps
6 Wire twisted and secured on inside face of fencing to avoid easy dismantling
7 Ground level
8 Approx. 0.6 m driven into the ground

Figure 2 — Protective barrier

Services:

The location of the service runs to the site is critical. Drainage and services will need to be installed, however, these may connect to existing drains off site and can apparently be located away from the trees to be retained.

Hard surfaces:

There are proposals for hard surfaces to be installed within the root protection areas and the method for this is included below under **"Special considerations"**.
There should be no cultivation of soil within the root protection areas following construction as the use of machinery such as mechanical rotovators would damage sub-surface roots and have a detrimental affect on the trees.

Special considerations:
The techniques described for the retention of the trees are the most up-to-date available and are, for the most part, in accordance with or in advance of the requirements of the British Standard 5837 2005 "Guide for Trees in relation to construction".

A suitably qualified arboriculturalist should be appointed to oversee development works and undertake liaison with the council and the developer and contractors during the construction phase in order to ensure compliance with these guidelines.

Note: Failure to fulfil planning conditions or breaches of statutory legislation can lead to delays due to "stop" notices" and can lead to the prosecution of contractors and company directors.

Adequate site supervision can protect the developer from delays, wasted expense and criminal prosecution.

In respect of any proposed hard surfaces within the RPA of retained trees, the methodology should be as follows.

Method Statement for New Driveway

This method is to be implemented to prevent damage to the Horse Chestnut tree T1 and to minimise risks of future damage to the drive by roots from T1.

The methodology is prepared on the basis of the sequence of operations necessary to complete the construction the new hard with minimum damage to trees proposed for retention. There is already a hard surface adjacent Horse Chestnut t1 and this needs to be removed and replaced with a more extensive hard surface, within the 8-metre root protection area distance for T1. Roots that emanate from T1 beneath the drive are a legal nuisance, in that they have encroached beneath the boundary. Under normal circumstances (with no TPO) a landowner would be entitled to cut back encroaching roots level with the boundary. Any damage caused by encroaching roots to the new hard surfaces in future could be subject to claims for compensation from the council under the TPO. I do not consider that any necessary minor pruning of encroaching roots would have an adverse affect on T1, which is a tree of poor quality that appears to be in decline with a relatively short useful life expectancy.

- Erect protective fencing to edge of construction area around T1 and T2 (if retained) as indicated on the attached plan to the report and as recommended in BS 5837.
- Break up and remove existing hard surface by hand with the aid of hand held power tools to avoid unnecessary root damage.
- An engineer should provide a detailed specification for materials and installation methods. It must be accepted that, in order to install hard surfaces within the RPAs without damaging roots, there will be a risk of future distortion of the final surface due to tree root activity. This activity can be direct (root expansion and physical stresses on roots beneath the finished surfaces or indirect damage caused by seasonal clay shrinkage and swelling exacerbated by root activity. It must be accepted that some future repairs are likely to be required. Any future repairs are to consider the methods in this statement in a similar manner to the initial construction process.
- Prune any damaged roots and roots within the upper surface that would prevent construction of the drive. Prune any roots less than 25mm with a sharp secateurs or lopper, the pruning of any roots over 25mm should be supervised by an arboriculturalist, all root pruning to conform to BS5837.
- Following excavation to the required depth for the subgrade, any ruts or dips should be levelled with washed sharp sand (not builders sand).
- Geotextile - Place a geotextile separation, filtration layer over the prepared ground surface, laid by hand. Use a material such as Fibrex F4M non woven geotextile, with dry joints overlapping by 300mm.
- Spread a subgrade material over the areas to fill any small ruts - it is anticipated that the parking areas can follow the general contours of the ground rather than excavate to find levels. If necessary levels can be raised by 'stacking' the geoweb cells on top of each other.

- Extend the cellular material (E.g. Geoweb 200mm perforated tree root protection system) over the area of the car parking areas within RPAs with sufficient overlap such that kerbs / footpaths can be constructed on top of the Geoweb.
- Fill the voids within the Geoweb with reduced fines Type 3 material working into the site over the top of the Geoweb. Type 3 is permeable and allows gaseous exchange, it is granular with a low fines content.
- Lay any kerbs and surface over the Geoweb such that the construction binds itself together.
- A further geotextile may be placed over the sub-base to prevent dry bedding materials or surfacing from merging into the sub-base.
- Place the final surface. This should consist of gravel or brick paving / slabs to be dry bedded onto the sub-base, with no joint sealant, to allow moisture and gas diffusion. Block Paving - Lay a second layer of e.g. Fibrex F4M geotextile separation fabric over the backfilled Cellweb Sysytem. Lay a sharp sand bedding layer compacted with a vibro compaction plate to the recommended depth. Place block paviors as per the manufacturers instructions.
- Loose Gravel – Place a second layer of e.g. Fiberex F4M geotextile separation fabric over the backfilled Cellweb sections. Construct a treated timber edge to restrict gravel movement. Place decorative aggregate to the required depth and compact surface with a vibro plate.
- Import free draining stone to edge of hard surface areas to act as 'french drain' and limit drop off edge of kerb.

IMPORTANT:

Due to the high rate of leaching of bituminous material into root systems, the implications of frost on water retained within the structure and the likelihood of particulates limiting porosity, porous tarmac is not to be used. Instead, the final surface should be of porous material such as butt jointed brick paving or gravel.

The implementation of the above methods will require that an arboricultural supervisor visits during critical development operations and monitors the trees and protection measures on a regular basis during the ground works phase as well as the building and landscape construction phases.

The site supervision visits will be documented and circulated to the site agent, developer, architect and Local Planning Authority as appropriate. The reports will detail the date of the visit, the operations being supervised and any issues that require action to meet the aims and objectives of this method statement.

Ground protection and scaffolding within the RPA.

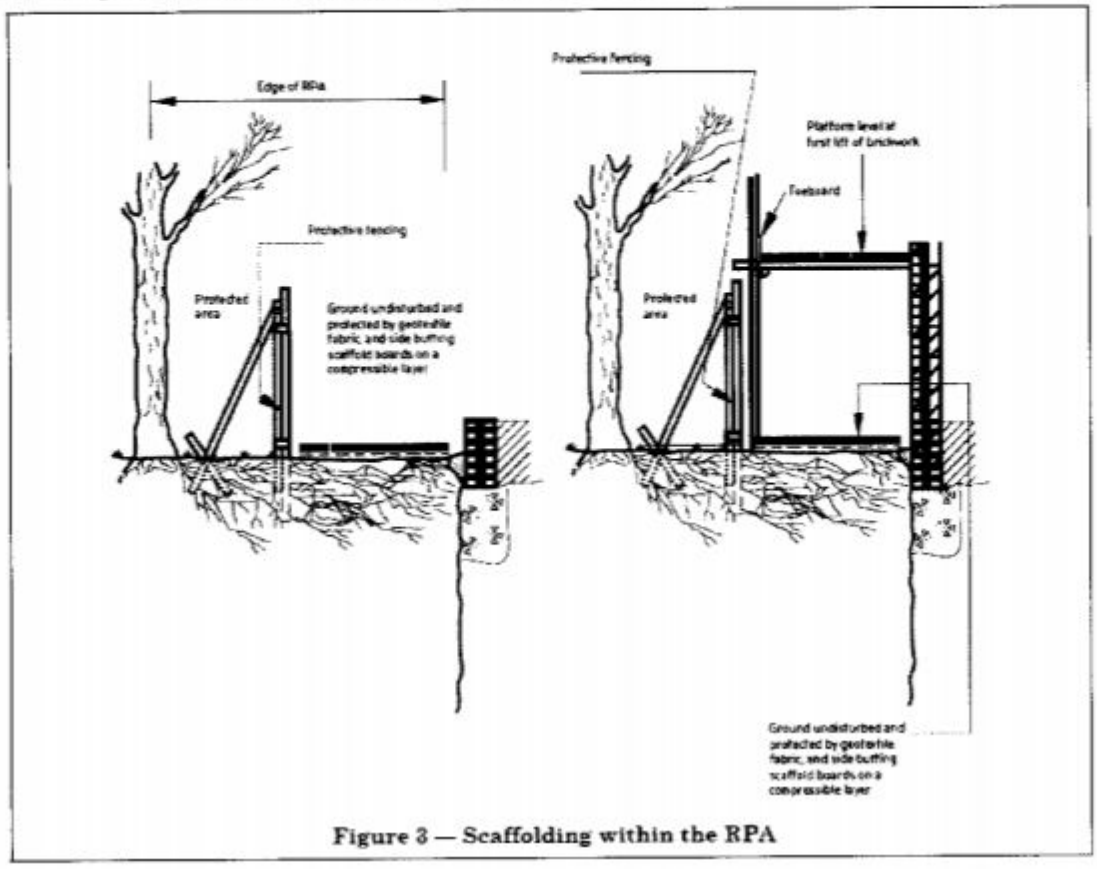

Figure 3 — Scaffolding within the RPA

Where vehicular or pedestrian access for the construction operation may take place within the root protection area (RPA), the possible effects of construction activity should be addressed by a combination of barriers and ground protection. The position of the barrier may be shown within the RPA at the edge of the agreed working zone but the soil structure beyond the barrier to the edge of the RPA should be protected with ground protection.

For pedestrian movements within the RPA the installation of ground protection in the form of a single thickness of scaffold boards on top of a compressible layer laid onto a geotextile, or supported by scaffold, may be acceptable (see Figure 3).

For wheeled or tracked construction traffic movements within the RPA the ground protection should be designed by an engineer to accommodate the likely loading and may involve the use of proprietary systems or reinforced concrete slabs

3. **Whether the development can be modified to accommodate the retention of trees that would otherwise be at risk or lost;**

There are no apparent substantial conflicts between the juxtapositions of the proposed buildings and the trees that would require any modification of the proposals. Trees will remain and there are opportunities for replanting to mitigate any losses. The removal of Yew T2 would not be significant in terms of the local landscape.

Tree works;

There are no tree works required to allow construction: The removal of Yew T2 could be considered as its loss would be of no detriment to the quality of the local landscape.

4. **Infrastructure requirements, e.g. easements for underground and above ground services; highway safety and visibility splays; substations; refuse stores; lighting; signage and CCTV requirements;**

There are currently no apparent issues in respect of the above requirements. Further information can be provided once greater design detail is available. New services will be unlikely to impact on the root protection areas and method statements are unlikely to be required in this regard.

5. The proposed use of the space;

The space around the proposed newly constructed building would be mainly domestic use with new hard landscaping to the front, landscape planting is likely to include shrubs and small trees.

These activities would have no detrimental affect on the retained trees and there are no other trees nearby that would require consideration.

6. **Whether tree loss resulting from the development proposals can be acceptably mitigated by new tree planting.**

There are no significant trees losses proposed and replacement planting is proposed. There are opportunities to reinforce the site with new planting to enhance the landscape value of the site.

All new tree planting proposals should take into consideration the future use, layout and design of a development site, constraints of soil and climate, the local landscape character and the contextual surroundings. As trees generally form the dominant elements of the long-term landscape structure of a site, careful consideration should be given to their ultimate height and spread, form, habit and colour, density of foliage and maintenance implications.

I would suggest Hawthorn, Hazel, Laurel, Holly, Privet and Cypress as appropriate species to provide screening along the boundaries.

Tree Retention Process

Development Stage	Action
Stage 1	Install protective fencing around Retained trees. Prepare any hard surface areas within root protection areas as per the Method Statement (where required). (See Method Statement under "Special Considerations") Protective fencing around T1 and T2 (to avoid impacts) to be erected on scaffold frame around the stems of the trees. Ground protection to be installed where new drive is to be constructed within RPA (can be final drive surface). Where scaffolding is to be erected within the RPA then ground protection as described in Figure 3 (BS5837) should be installed Install new hard surfaces (without final surface) according to the Method Statement to act as ground protection for the RPA of T1 to protect roots from construction activities for the house. Undertake ground works for new building.
Stage 2	Observe tree protection measures during the entire process until completion of the new building and hard surfaces.
Stage 3	Undertake construction of the buildings whilst undertaking precautions to protect trees. Fencing not to be moved or breached. Care to be taken to avoid damage.
Stage 4	If the installation of underground services are required, excavations can be avoided that may damage roots by the use of "trenchless technology" or "thrust boring" below the root plate of the trees. Method Statements will be required.
Stage 5	Install any new final hard surfaces whilst undertaking suitable measures to avoid root damage. (See Method Statement under "Special Considerations")
Stage 6	Following construction, the protective fencing and ground protection (other than the new access drive) can be removed
Stage 7	Undertake landscape planting.

The implementation of the above methods will require that an arboricultural supervisor visits during critical development operations and monitors the trees and protection measures on a regular basis during the ground works phase as well as the building and landscape construction phases.

The site supervision visits will be documented and circulated to the site agent, developer, architect and Local Planning Authority as appropriate. The reports will detail the date of the visit, the operations being supervised and any issues that require action to meet the aims and objectives of this method statement.

Method Statements

In addition you may need to give consideration to the following that may be needed at sometime during the life of the application:

- **Where it is necessary and proposed to put foundations or services within the Root Protection zone**
- **Design considerations for new planting**

Further information can be provided if required.

References

Anon, British Standard BS 5837 (2005). *"Trees in Relation to Construction. Recommendations"*. British Standards Institute. London.

Anon, British Standard BS 3998 (1989). *"Recommendations for Tree Work"*. British Standards Institute. London.

***Anon.** British Standard BS 3938 (1980) *"Nursery Stock Specifications Part 1 Trees & Shrubs"* British Standards Institute. London

***Anon.** British Standard BS 4428 (1969) *"Recommendations for General Landscape Operations"* British Standards Institute. London

***Anon.** British Standard BS 4043 *"Recommendations for transplanting root-balled trees"* British Standards Institute. London

Arboricultural Association, 1997. *"Protection of trees on development sites"*. Leaflets numbers 9 & 10.

Patch D. & Dobson M., Arboricultural Practice Note APN12 (2008). *" Driveways Close to Trees"*. Arboricultural Advisory & Information Service.

DOE, *"Tree Preservation Orders - A guide to the law and good practice"*. Department of Environment, 1994.

Harris, R.W. (1983) Arboriculture: Care of trees, shrubs and vines in the landscape. Prentice Hall. London

Town & Country Planning Act Part VIII (1990). Issued by the Secretary of State for the Environment, HMSO.

Gasson, P.E. and Cutler, D.F. (1990) Tree root plate morphology. Arboric. Journal 14, 193-264

Shigo, A.L., (1986) A new tree biology. Shigo & trees, associates. Durham, New Hampshire, USA. 595 pp

Shigo, A.L. (1991) Modern Arboriculture. Shigo & trees, associates. Durham, New Hampshire, USA , 490pp

Mattheck, C. and Breloer, H. (1994) The body language of trees. HMSO 240 pp

Phillips D.H. and Burdekin, D.A. (1982) Diseases of forest and ornamental trees. Macmillan Press. 435 pp

TREES FOR REMOVAL

Category and definition	Criteria	Identification on plan
Category R Those in such a condition that any existing value would be lost within 10 years and which should, in the current context, be removed for reasons of sound arboricultural management	• Trees that have a serious, irremediable, structural defect, such that their early loss is expected due to collapse, including those that will become unviable after removal of other R category trees (i.e. where, for whatever reason, the loss of companion shelter cannot be mitigated by pruning) • Trees that are dead or are showing signs of significant, immediate, and irreversible overall decline • Trees infected with pathogens of significance to the health and/or safety of other trees nearby (e.g. Dutch elm disease), or very low quality trees suppressing adjacent trees of better quality NOTE Habitat reinstatement may be appropriate (e.g. R category tree used as a bat roost: installation of bat box in nearby tree).	DARK RED

TREES TO BE CONSIDERED FOR RETENTION

Category and definition	Criteria — Subcategories			Identification on plan
	1 Mainly arboricultural values	2 Mainly landscape values	3 Mainly cultural values, including conservation	
Category A **Those of high quality and value:** in such a condition as to be able to make a substantial contribution (a minimum of 40 years is suggested)	Trees that are particularly good examples of their species, especially if rare or unusual, or essential components of groups, or of formal or semi-formal arboricultural features (e.g. the dominant and/or principal trees within an avenue)	Trees, groups or woodlands which provide a definite screening or softening effect to the locality in relation to views into or out of the site, or those of particular visual importance (e.g. avenues or other arboricultural features assessed as groups)	Trees, groups or woodlands of significant conservation, historical, commemorative or other value (e.g. veteran trees or wood-pasture)	LIGHT GREEN
Category B **Those of moderate quality and value:** those in such a condition as to make a significant contribution (a minimum of 20 years is suggested)	Trees that might be included in the high category, but are downgraded because of impaired condition (e.g. presence of remediable defects including unsympathetic past management and minor storm damage)	Trees present in numbers, usually as groups or woodlands, such that they form distinct landscape features, thereby attracting a higher collective rating than they might as individuals but which are not, individually, essential components of formal or semi-formal arboricultural features (e.g. trees of moderate quality within an avenue that includes better, A category specimens), or trees situated mainly internally to the site, therefore individually having little visual impact on the wider locality	Trees with clearly identifiable conservation or other cultural benefits	MID BLUE
Category C **Those of low quality and value:** currently in adequate condition to remain until new planting could be established (a minimum of 10 years is suggested), or young trees with a stem diameter below 150 mm	Trees not qualifying in higher categories	Trees present in groups or woodlands, but without this conferring on them significantly greater landscape value, and/or trees offering low or only temporary screening benefit	Trees with very limited conservation or other cultural benefits	GREY
	NOTE Whilst C category trees will usually not be retained where they would impose a significant constraint on development, young trees with a stem diameter of less than 150 mm should be considered for relocation.			

Tree Locations Sketch Plan – Not to scale

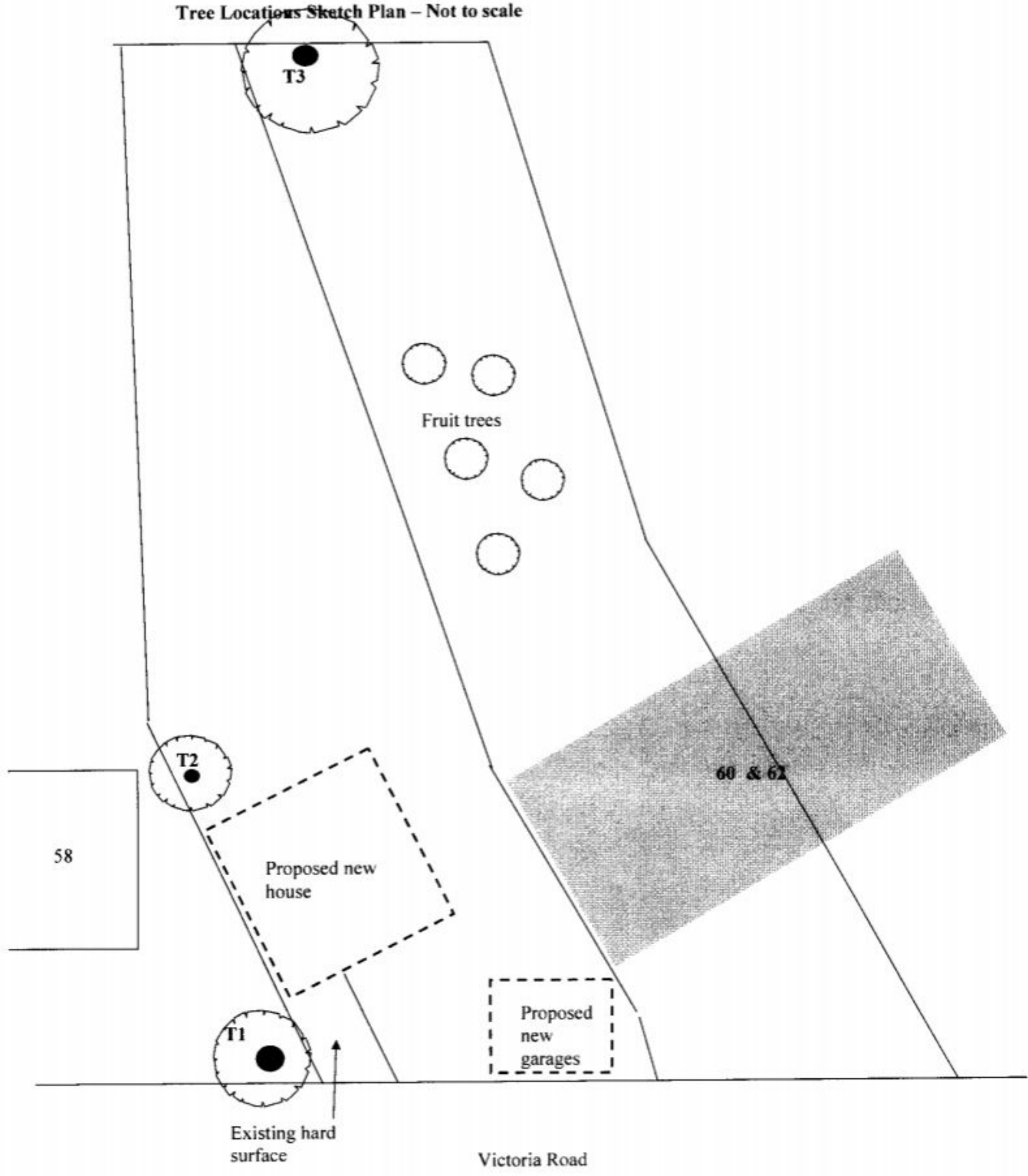

Tree Protection Plan - Not to scale

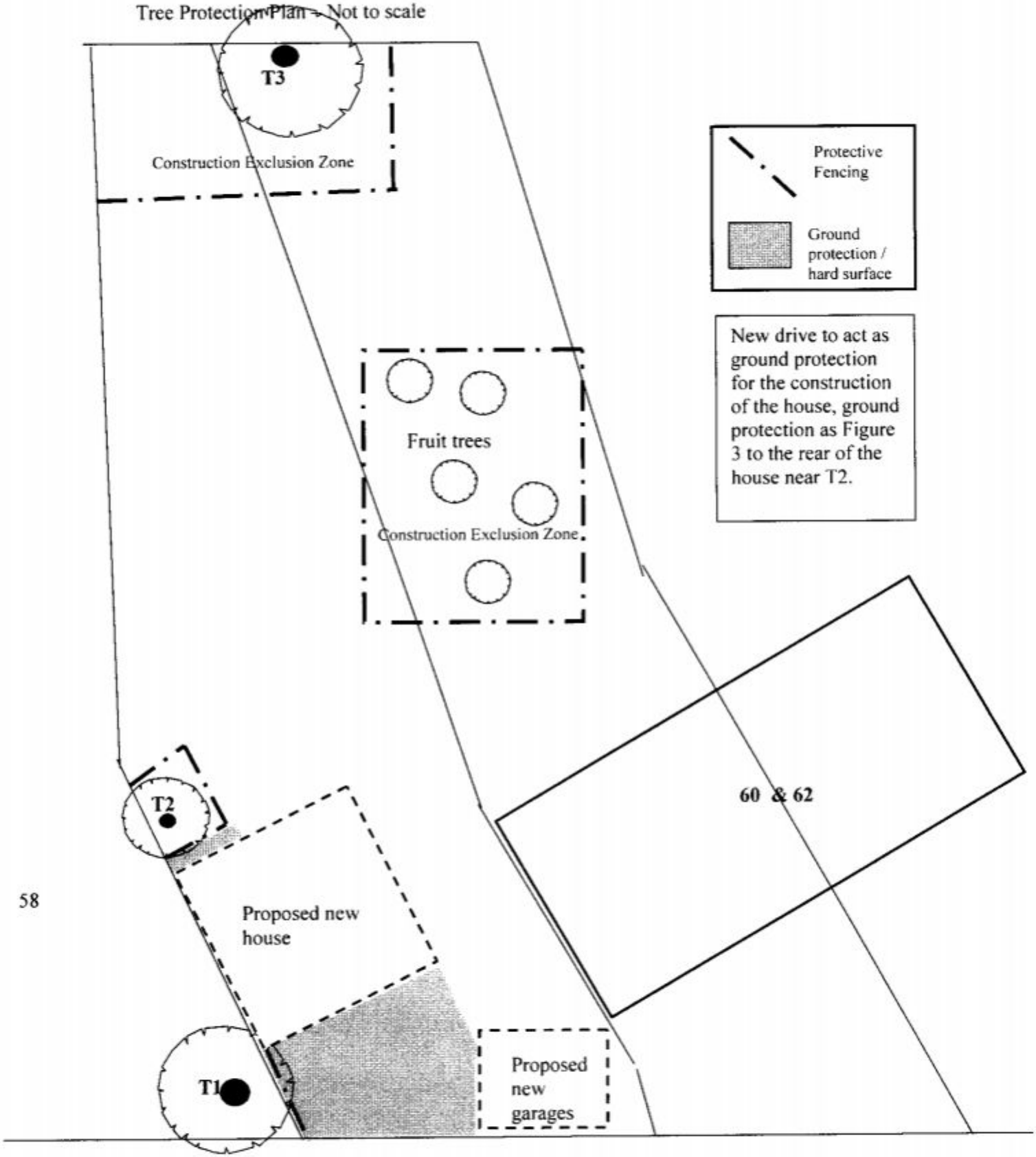

Appendix 1
Tree Schedule

60 Victoria Road, Emsworth, Hants.

Tree Details and Root Protection Areas

No.	Species	Height m	Stem Diam. mm	Branch Spread Into Site or Average Radius	Crown Clearance m	Age Class	Condition/ Comments	*RPA radius m	Estimated Remaining Contribution Years	BS5837 Category
T1	Horse Chestnut	7.5	<350 800 at base	<1m into site	2.5	Mature	Multi stemmed from 1 metre, unbalanced crown, previously lopped and topped heavily, poor form, weak crown structure	8	10	C3
T2	Yew	3.8	160	2m into site	1.5	Semi Mature	No significant defects	2	30	B2
T3	Oak	14	740	4m into site	3.5	Mature	No significant defects, evidence of previous pruning, typical of the species	7	30	B1

***RPA Radius** – This is defined by using either the calculations from BS 5837 (including the allowable offset distance) or half the height of the tree (including the allowable offset distance) if this is the greater distance.