Alderwood
Consulting Limited

Mr I Venn
PWP Architects
61 South Street
HAVANT
Hants
PO9 1BZ

My Ref: D948AIAL2

27th January 2011

HAVANT BOROUGH COUNCIL
10 FEB 2011
RECEIVED

Dear Mr Venn

RE: 4 THE GARDENS, WARBLINGTON PO9 2XH
PROPOSED REDEVELOPMENT

In accordance with your instruction on behalf of the applicant I have visited the above site and collected tree information relevant to the proposed development to the standard normally required by the Local Planning Authority in support of a planning application. My assessment of the impact of the proposals with appropriate protection and amelioration measures is set out below. This letter is written as a part of the formal submissions to the Local Planning Authority, with additional copies for use by Council officers.

1 The proposal

1.1 **Development:** The proposal is to erect a detached garage at 4 The Gardens, Warblington. The proposed layout is shown on the PWP Architects drawing no. 4815/1200, revision A dated 21st December 2010. This is based on a topographical survey of the site and shows the trees on and closely adjacent to the site. This drawing has been annotated with tree numbers and tree protection measures and a copy is attached as plan HB1.

2 Trees

2.1 **Trees:** There are 2 trees identified individually included in the tree schedule attached as Appendix 1. The yew T5 is located on neighbouring property to the northwest. The yew T1 is already protected by virtue of provisions relating to a previous application and consent.

2.2 **Formal tree controls:** The full extent of formal tree controls for the trees on and closely adjacent to the site is not known, although I understand at least one of the trees, T1, may be included in a tree preservation order. However, the proposal is to retain the trees of amenity value and protect them during

development as if they were included in formal protection. This arboricultural implications assessment has been prepared in acknowledgement of the general planning principle that trees are a material consideration in the planning process, and acknowledging the Council's relevant tree policies.

2.3 **Tree removals:** No trees included in the tree schedule and of amenity value are proposed for removal.

3 Issues relevant to the trees

3.1 **Services:** The site is currently fully serviced, and the proposal is to continue with existing connections to these existing services. There should be no requirement for new service installation through tree protection zones - the proposed garage does not need complicated services and there are no requirements for changes to foul water provisions. It seems reasonably clear that services for the existing building would have entered the site within the protection area (RPA) for the yew T1 when the existing building was constructed. This being so, the repair and maintenance of the existing services would be reasonable. For the avoidance of doubt any new services within RPAs would be installed in trenching in accordance with the recommendations in NJUG 10: *Guidelines for the planning, installation and maintenance of utility services in proximity to trees* (National Joint Utilities Group 1995). Trenches would be dug by hand and any roots over 2.5cm in diameter would be retained undamaged. The trench backfill round the roots would be a granular material that can be compacted to the point where it can bear the new surfacing without subsiding but without abrasion of tree roots and without raising the soil bulk density to the point where root growth cannot take place. Services installed in such a manner would avoid significant harm to tree roots. Surface water disposal may use the existing provisions (and see paragraph 5.1 below). At present there are no proposals for trenching or excavation for services within RPAs and no provisions for special installation measures for services in respect of the retained trees.

3.2 **Demolition:** There is no existing building or structure requiring demolition within RPAs and no adverse effects on retained trees from such activities. For the avoidance of doubt there shall be additional safeguards which include no fires within 10m of the canopy of any retained tree, and no storage or mixing of harmful materials e.g. DERV fuel, concrete within 10m of the trunk of any retained tree. The combination of these measures with the temporary tree protective fencing and temporary ground protection will reduce any risk of damage to retained trees to an acceptable minimum. There is no issue for trees from demolition.

3.3 **Construction:** The proposed garage in the northwest corner of the site lies partly within the RPA of T1, and of T5 located in the rear garden of a neighbouring property. In these circumstances, special foundations such as pile and beam or the Abbey Pinford 'Housedeck®' system are recommended to reduce the impact

HAVANT BOROUGH COUNCIL
10 FEB 2011
RECEIVED

on the trees' rooting system to an acceptable level. The piles will be hand driven to avoid root damage and the floor level raised above ground to allow for the annual increment of any surface roots. This phase of the construction may be monitored by a suitably qualified and experienced arboriculturist or Havant Borough Council (HBC). The method of floor construction will be agreed in writing with HBC prior to the commencement of development. In terms of the tree canopy, the garage roof is hipped away from the tree, ensuring sufficient clearance for canopy sway in high winds and normal shoot extension growth.

3.4 **Surfacing:** The existing dwelling already has vehicular access and parking across the front north elevation and parts of this are within RPAs. The proposal is for these areas of parking to remain and to be used for vehicular access during the building works. The scale of development means that there will be no significant extra loading on the access, and the trees will not be at additional risk from the continuing use of this access. The existing surfacing will be augmented with temporary tree protective fencing for T1 to ensure that vehicular access is constrained to the existing surfacing. The retention of the existing access and the addition of temporary protective fencing will limit the risk of damage to tree roots to an acceptable level.

3.5 **Construction access:** Access for construction will be on the existing surfaced access, and in any of those areas not protected by temporary tree protective fencing. There is space round the footprint of the proposed garage for pedestrian access and the additional safeguard here will be temporary ground protection. With the retention of the existing surfacing and with fencing and ground protection in place there will be no significant adverse effects on trees from this aspect of the development.

3.6 **Materials storage and handling:** The proposed access and space for parking within the site give space for the storage and handling of materials outside RPAs. Provided that materials storage and handling is limited to these areas, outside tree protection areas and fenced zones, there will be no significant adverse effects on trees from this aspect of the development.

4 Protective measures

4.1 **Protective fencing:** Temporary tree protective fencing has already been installed in respect of T1 at the location agreed in the permission for the changes to the existing dwelling. For the avoidance of doubt confirmatory details are provided in this report. The temporary fencing is to the BS 5837:2005 recommendations i.e. preformed galvanised steel mesh panels ('Heras' or similar) facings on a driven braced scaffold pole framework. It will be retained at the locations shown until construction is completed. It may be moved or removed only with notice to and consent from the Council. An indicative specification is given at Appendix 2. The protection for T1 includes the existing post and rail fence on its north side.

4.2 **Temporary ground protection:** Given that the proposed garage is situated within the RPA of T5, it would not be practicable to erect protective fencing to

10 FEB 2011
RECEIVED

demarcate the RPA as this would prohibit access for building. The ground within the RPA that lies outside the garage footprint will be protected with a protective temporary surface as indicated on plan HB1. Where such ground protection is proposed, it shall be in accordance with the recommendations in BS 5837:2005 and will take the form of scaffold boards butted to form a continuous surface, or plywood of at least 15mm thickness laid to cover the area indicated. This boarding will be laid over a compressible layer e.g. wood chips at least 50mm deep, the wood chips being laid over a geotextile membrane. An indicative specification is given at Appendix 3. The satisfactory installation of the ground protection may be confirmed in writing to the Council on inspection by a person suitably qualified in arboriculture and will be retained until construction is completed. No heavy machinery will be operated within the garage footprint as this may cause root compaction and the floor slab will be laid prior to any other building works: this may then be used as a load baring surface for pedestrian access and handling materials.

5 Other issues

5.1 **Rainwater supply:** The rainwater catchment area of T5 is likely to be slightly reduced once the proposed garage is erected. I recommend that rainfall collected in the garage's gutters is channelled underneath the garage floor and dispersed in at least 3 separate locations, within the footprint, to irrigate the rooting system.

5.2 **Post occupancy:** The location and character of the proposed garage has been achieved in consideration of all the site factors including the presence of trees. The proposed garage does not have a habitable component so issues of dominance and shading are not relevant. The Council could readily resist unreasonable applications for pruning or felling consent, and could expect to be supported in such decisions at appeal.

The details given in this letter show that, provided the protective measures set out are put in place, trees will not be adversely affected by the proposed development. For this reason, the proposals should be acceptable to the Council in tree terms and there should be no tree-related grounds for a refusal of planning permission.

Please call me if you would like to discuss any of these points.

Yours sincerely

Helen Brown MSc For; Tech Cert Arb.

HAVANT BOROUGH COUNCIL
10 FEB 2011
RECEIVED

Encs

APPENDIX 1
Tree Schedule and Explanatory Notes

Tree No	Species	Height (m)	Trunk Diameter (cm)	Crown spread (m)		Crown height above ground	Age class	Physiological condition	Structural condition and notes	BS 5837 cat	Root protection area (m)
T1	Yew (*Taxus baccata*)	9	134	7.7	7.7	2.5	Maturing	Good	Good - gravel parking area 3.5m from tree	A	15.0 (Maximum BS extent)
				7.7	7.7						
T5	Yew	11	50?	nm	4	3	Maturing	Good	Good - situated on neighbouring property; telegraph wire running through canopy.	A	6.0
				4	5						

HAVANT BOROUGH COUNCIL
10 FEB 2011
RECEIVED

APPENDIX 1
Tree Schedule and Explanatory Notes

Abbreviations:

G	: Group
m	: Metre
>	: Greater than
<	: Less than

Explanatory Notes

- **Reference numbers:** Accessible individual trees have been given a number which is given in the tree schedule and on the site plans.
- **Species:** I based the species identification on my visual observations.
- **Height:** Height is estimated to the nearest metre.
- **Trunk diameter:** Trunk diameter for accessible trees has been measured with a diameter tape and recorded in centimetres. Inaccessible trunk diameters are estimates, indicated with '?'. Trees with multiple trunks have their largest trunk diameter given.
- **Crown spread:** Crown spread for site boundary trees is measured in the direction of the proposed development. Crown spread for trees within the site is measured at the four cardinal compass points. Unmeasured crown spreads area shown as not measured 'nm'. The distances given as appropriate correspond to crown spreads to the four cardinal compass points as shown in the grid below:

N	E
W	S

- **Crown height above ground:** The height of the crown clearance above the ground over the site is estimated to the nearest 0.5m.
- **Age class:** Tree maturity has been assessed as mature (last one third of life expectancy), maturing (one third to two thirds life expectancy) and young (less than one third life expectancy) to correspond to the classes given in BS 5837:2005. There are no over mature or veteran trees included in the schedule.
- **Physiological condition:** This is an indication of the health and physiological condition of the tree, using at least the four categories in BS 5837:2005 (good, fair, poor, dead).
- **Structural condition:** This is an indication of the structural condition of the tree, e.g. collapsing, the presence of physical defects.
- **BS 5837 category:** As advised in BS 5837:2005. This grading is based on the estimated remaining contribution in years i.e. A - more than 40; B - 20-40; C - 10-20; R - less than 10.
- **Root protection area:** The area of root protection should be equivalent to the area of a circle centred on the tree with a radius of least 12 times the trunk diameter. This column gives the radius of such a circle; the distance may not be the same as the distance for protective fencing.

HAVANT BOROUGH COUNCIL
10 FEB 2011
RECEIVED

APPENDIX 2
Specification for tree protective fencing

Specification for tree protective fencing

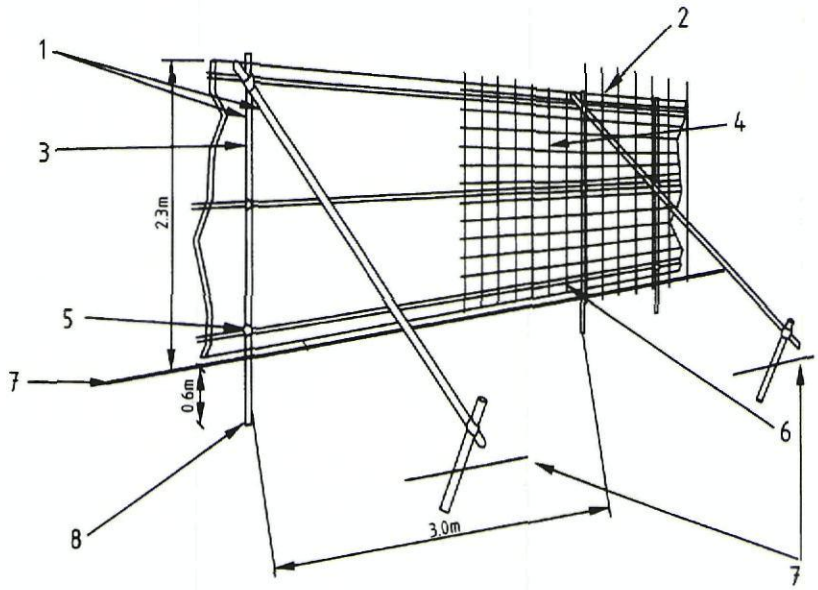

1 Standard scaffold poles
2 Uprights to be driven into the ground
3 Panels secured to uprights with wire ties and where necessary standard scaffold clamps
4 Weldmesh wired to the uprights and horizontals
5 Standard clamps
6 Wire twisted and secured on inside face of fencing to avoid easy dismantling
7 Ground level
8 Approx. 0.6 m driven into the ground

Purpose: Fencing will be installed to protect trees during the development process. Fencing should:

- Prevent pedestrian access into the protected area
- Prevent vehicular access, including site plant, into the protected area
- Prevent the storage of any materials associated with development e.g. top soil, building materials, fuel within the protected area
- Be installed in a fashion that makes it difficult to move easily
- Be installed in a fashion that allows it to remain effective for the life of the development
- Be installed in the positions agreed with the Local Planning Authority and shown on the fencing plan

Specification: Fencing should satisfy the above criteria. A typical construction is indicated in BS 5837:2005 and illustrated above. The fencing on this site will be to the standard recommended in BS 5837:2005 i.e. a scaffold framework comprising a vertical and horizontal framework, well braced to resist impacts, with vertical tubes spaced at a maximum interval of 3m. On this, weldmesh panels should be securely fixed with wires or scaffold clamps.

Location: The location of the fencing is shown on the annotated site layout plan JFI by a dashed black line. The fencing will be erected with arboricultural supervision prior to any demolition or development activity and retained in the positions shown until the completion of development or as required for landscaping and path installation. The position of the fencing shall be altered only with agreement from the Local Planning Authority.

HAVANT BOROUGH COUNCIL
10 FEB 2011
RECEIVED

APPENDIX 3
Specification for protective ground cover

Specification for ground protection

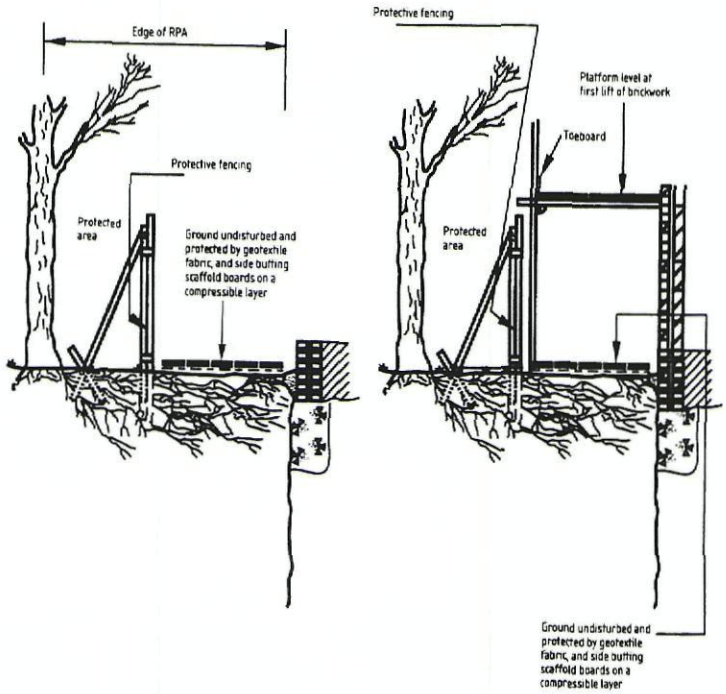

Purpose: Ground protection shall be installed in the locations indicated to protect trees during the development process. Ground protection should:

- Protect roots from compaction, abrasion or other damage during development
- Allow pedestrian access only into the protected area
- Allow the movement of materials by hand only within the area with ground protection
- Allow the installation and use of scaffolding within the area with ground protection
- Be installed in a fashion that makes it difficult to move easily
- Be installed in a fashion that allows it to remain effective for the life of the development
- Be installed in the positions agreed with the Local Planning Authority and shown on the tree protection plan

Specification: Ground protection should satisfy the above criteria. A typical installation is indicated in BS 5837:2005 and illustrated above.

Location: The location of the ground protection is shown on the annotated site layout plan attached to this report. The ground protection will be installed with arboricultural supervision prior to development activity and retained in the positions shown until the completion of development or as required for landscaping and path installation. The position of the ground protection shall be altered only with agreement from the Local Planning Authority.

HAVANT BOROUGH COUNCIL
10 FEB 2011
RECEIVED

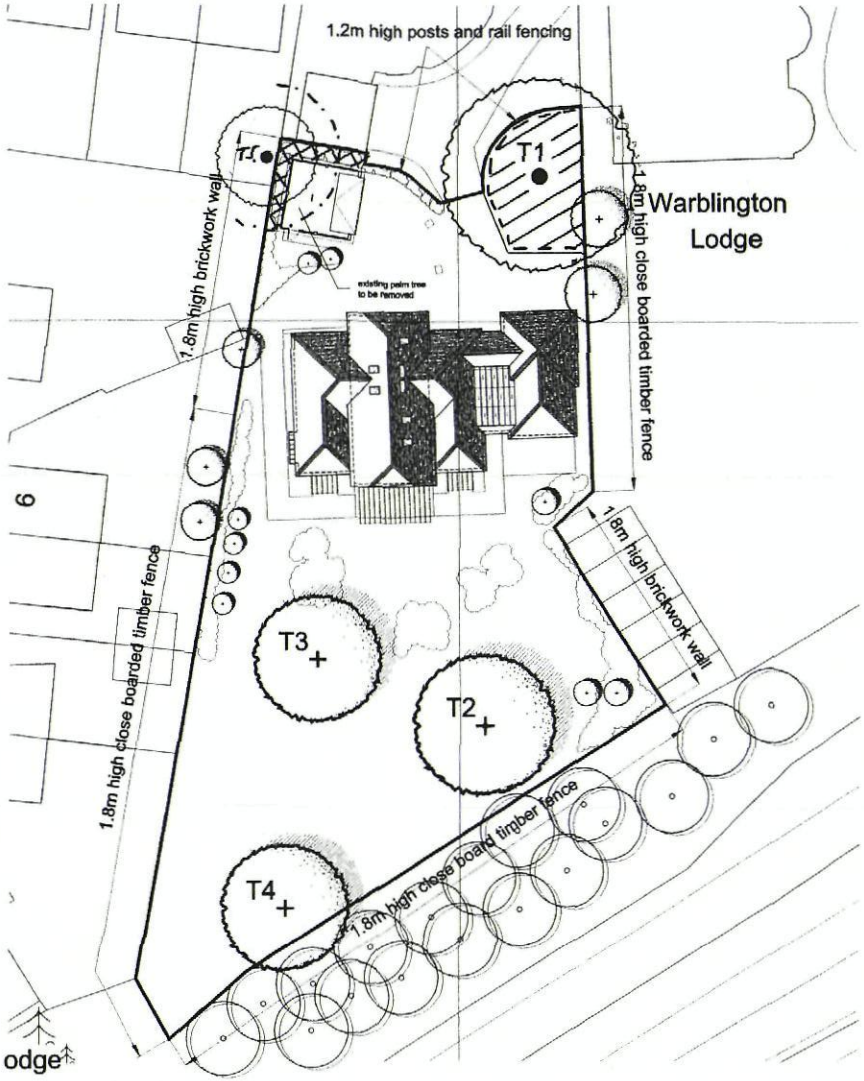

Crown Copyright. All rights reserved. Licence Number 100020449

As Proposed Site Plan
1:200



Typical site section
1:100



As Existing Location Plan
1:1250



East elevation
1:100



North elevation
1:100

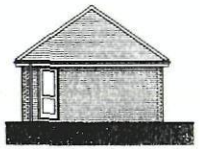

South elevation
1:100



West elevation
1:100

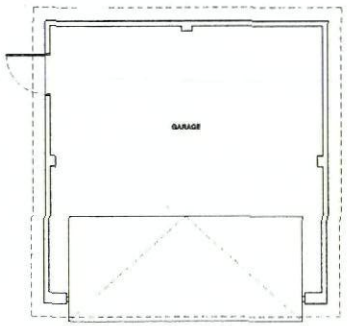

Proposed floor plan
1:50

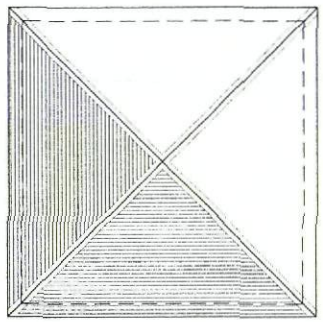

Proposed roof plan
1:50

HAVANT BOROUGH COUNCIL
10 FEB 2011
RECEIVED

Alderwood Consulting Limited

Plan HB1

Proposed development at 4 The Gardens, Warblington	Report Ref: D948AIAL2

Location of trees with tree schedule numbering showing location of temporary ground protection and temporary tree protective fencing

Key

T.1 •	Location of trees
	Location of temporary ground protection
	Location of temporary protective fencing

Alderwood Consulting Ltd. Chapel House, 1 Fearnes Road, Southampton, SO19 7GU
Tel 02380 111612 Fax 02380 111612 Mobile 07736 220057
Email jonathan@alder-wood.co.uk Web www.alder-wood.co.uk
Company Number 5513756
Registered Office: Windover House, St Anne Street, SALISBURY, Wiltshire, SP1 2DR.

notes:

revisions: A 21.12.2010 IV TPO in adjacent property added to site plan

revisions:

Lee Stewart
New Double garage
4 The Gardens, Warblington
drawing information title: Detailed proposals

pwparchitects

PWP Architects Ltd 61 South Street, Havant, Hampshire PO9 1BZ
t: 02392 482494 f: 02392 481152
e: design@pwp-architects.com
w: www.pwp-architects.com

status:	For Approval
date:	January 10
scale:	1:200/1250
drawn:	IV
chk'd:	SL

job: 4815 dwg: 1200 rev: A

100mm @A1

NOTE: The contractor is responsible for checking all site dimensions and levels. These should be checked prior to the ordering of any components and before the commencement of the works. All discrepancies should be brought to the attention of the Contract Administrator