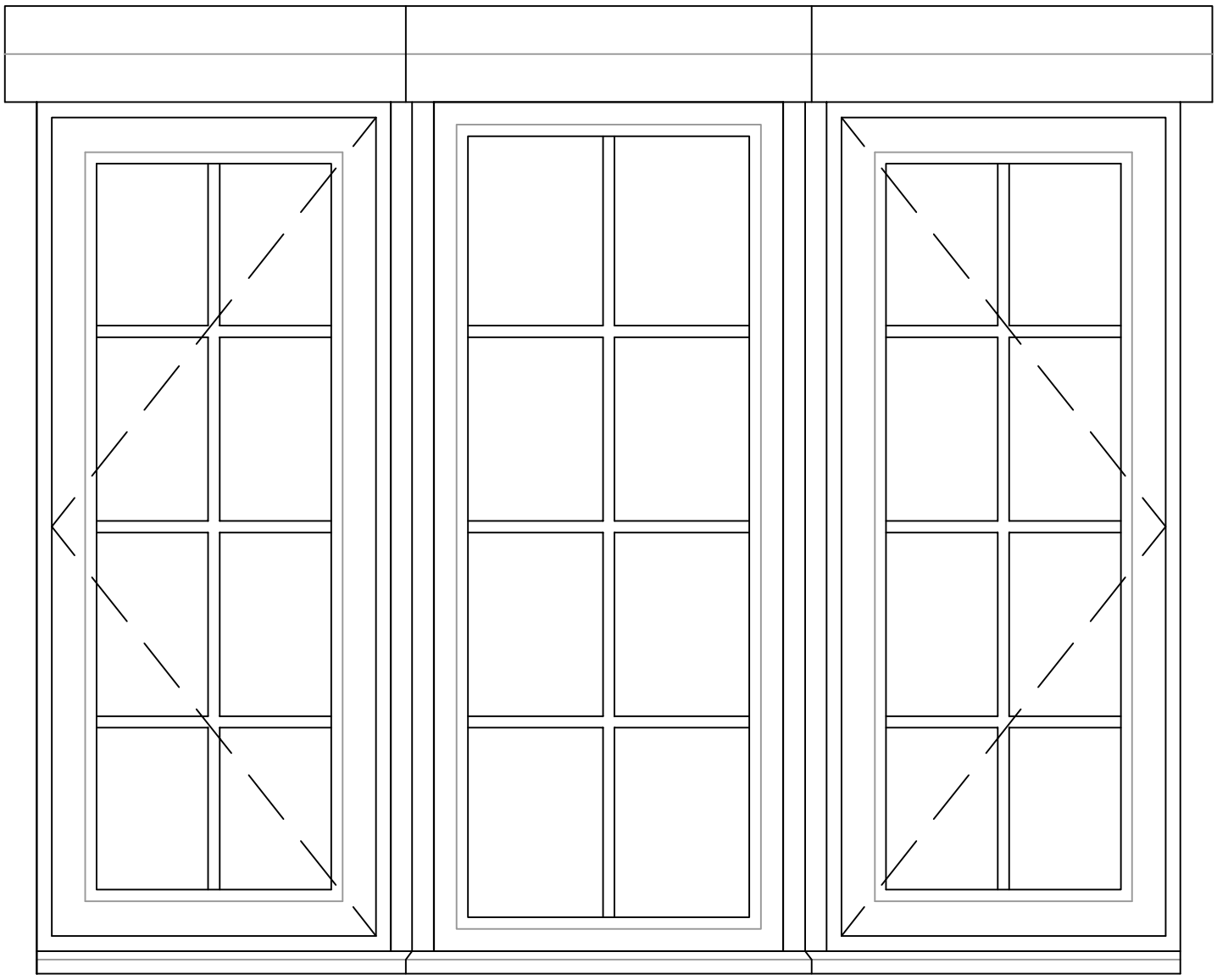

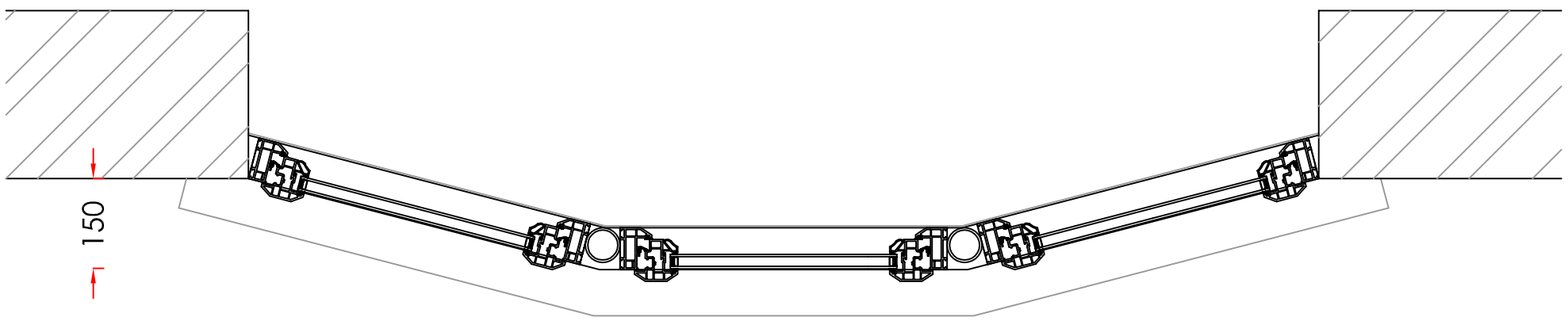

9,10,11. LOUNGE BAY

Scale - 1:10
(Produced on A3 Paper)

Drawers Initials.
AA

REVISION A- FANLIGHT AND TRANSOM REMOVED FROM ITEM 10 (BAY WINDOW).AA

CONTRACT No.: 01689954 A **date:** 26/01/2012

PROPOSED: PROPOSED WINDOW REPLACEMENT
AT: (INSTALLATION ADDRESS) 31 BRIDGEFOOT PATH
EMSWORTH
HAMPSHIRE
PO10 7EB

FOR:..... MRS SPENCER

Anglian Home Improvements
CONSERVATORIES DIVISION
TELEPHONE: 0845 437 3600
FACSIMILE: 01603 480101

Scale Bar 1:10(mm)
0 100 200 300 400 500 600 700 800 900 1000 1100 1200 1300