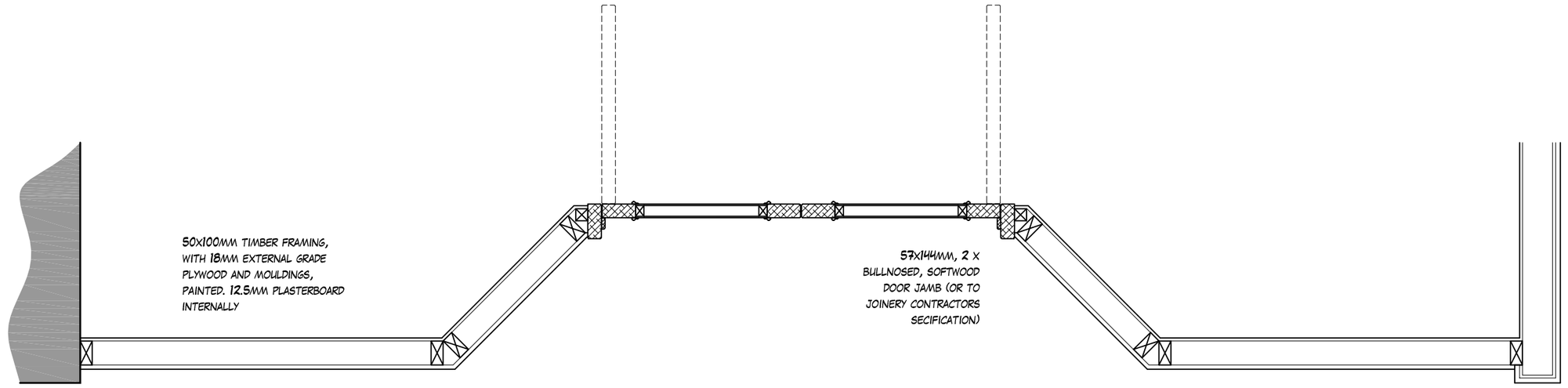

Joinery Plan below sill 1:20

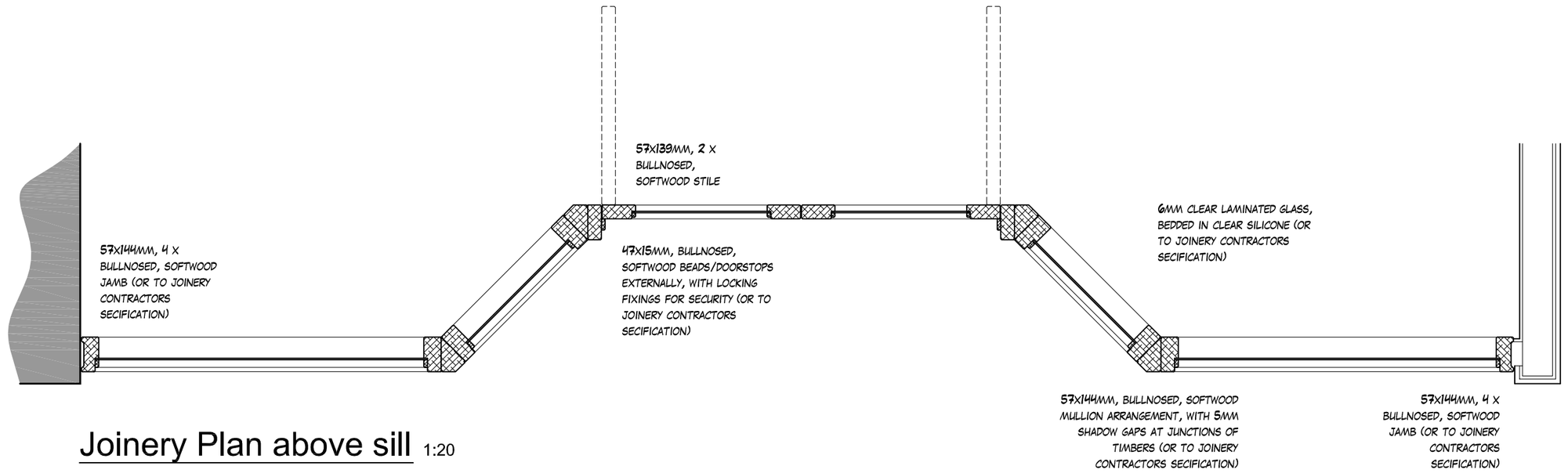

Joinery Plan above sill 1:20

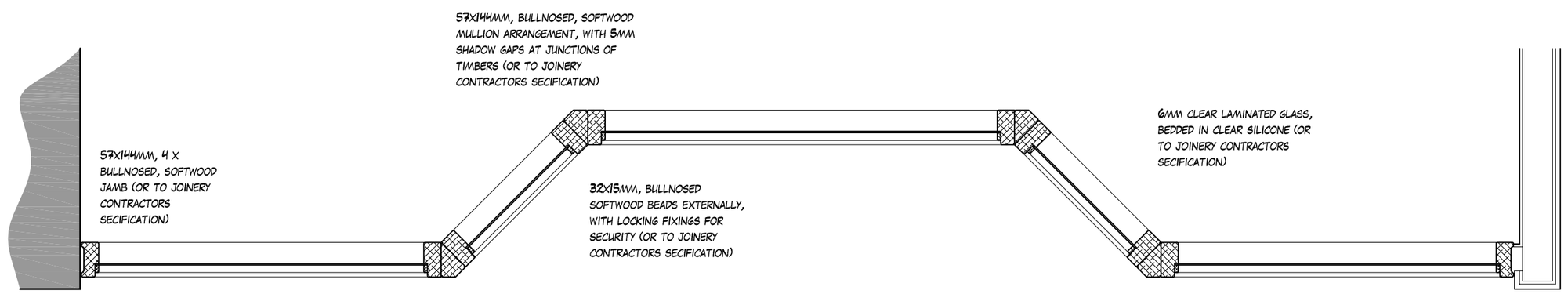

Joinery Plan at fanlight 1:20

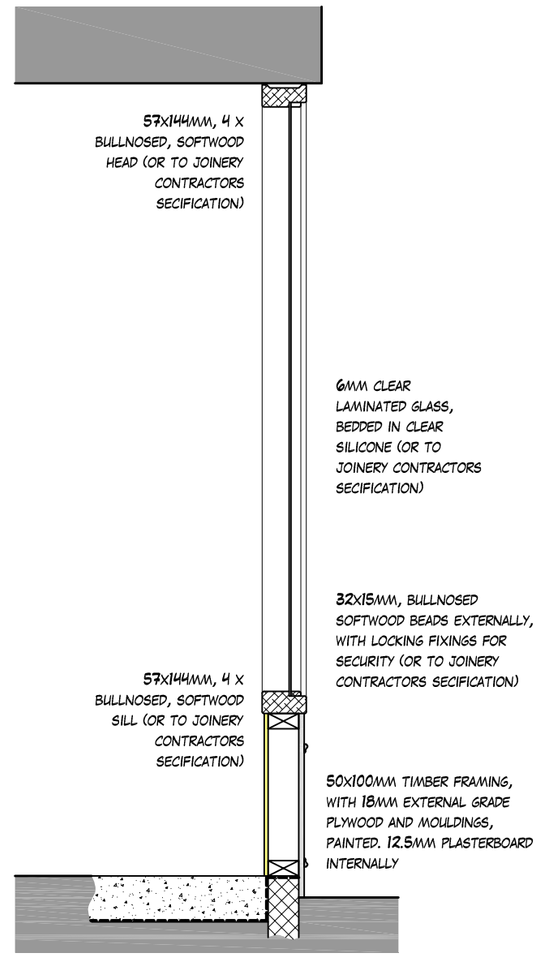

Joinery Section through window 1:20

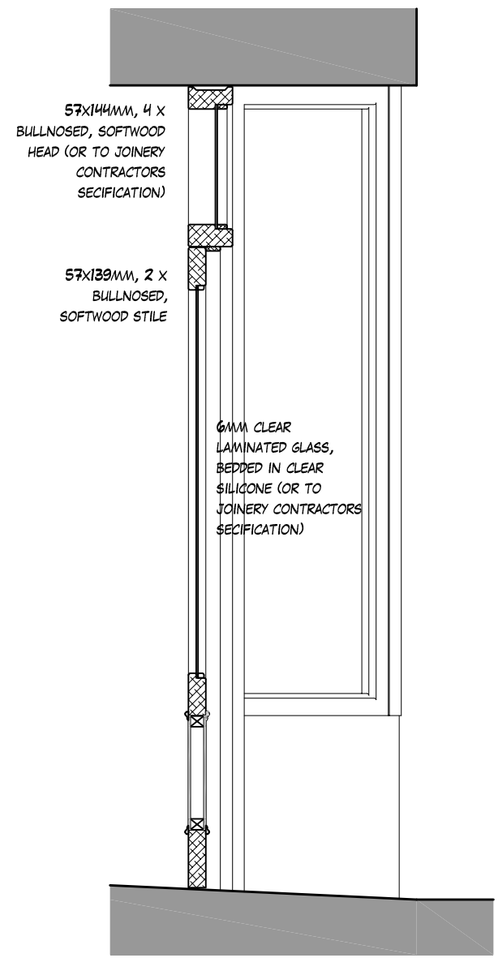

Joinery Section through door 1:20

DRAWN BY: KPL

CHECKED BY: DJK

This drawing has been produced for a particular purpose. To ensure that the proposed is built and that high quality project is achieved, please observe the following:

- All dimensions shown are to be checked on site before work commences.
- Any discrepancies or errors found on this drawing MUST be reported to its originator immediately, to comply with any insurances or guarantees.
- All dimensions are in millimetres unless noted otherwise on the drawing.
- Building Regulations and any other requirements as the local/statutory authorities' enforcement officer may consider necessary.

IF IN DOUBT ABOUT ANY ELEMENT OF THIS DRAWING, CALL SPITFIRE

REVISIONS:

CLIENT: SOUTH ALLIANCE INVESTMENTS

PROJECT: PROPOSED CONVERSION TO TWO FLATS @ WEST STREET, HAVANT

DRAWING: JOINERY DETAILS AS PROPOSED

DRAWING NO: 1202.15

SCALE: AS SHOWN @ A2

DATE: DECEMBER 2011

© COPYRIGHT SPITFIRE ARCHITECTURAL CONSULTANTS LTD.

22A CORNFIELD ROAD, EASTBOURNE, BN21 4QE - 01323 431 892 - WWW.SPITFIREARCHITECTURE.CO.UK

SPITFIRE ARCHITECTURE