PERMIT

Mr. E. Walliker
023 92 460 882

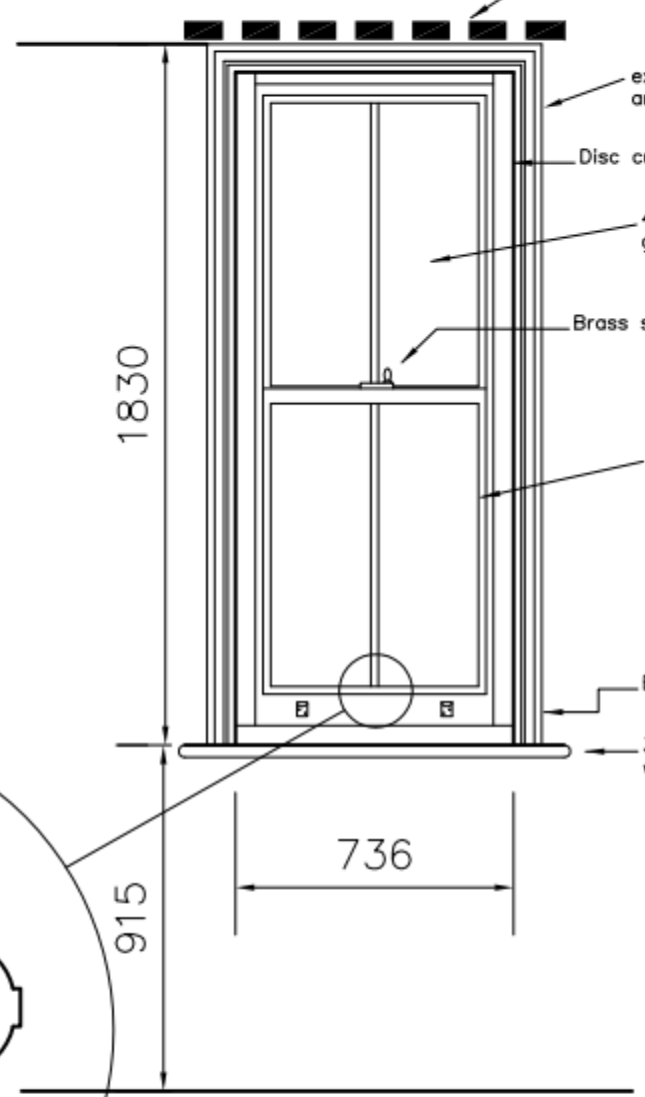

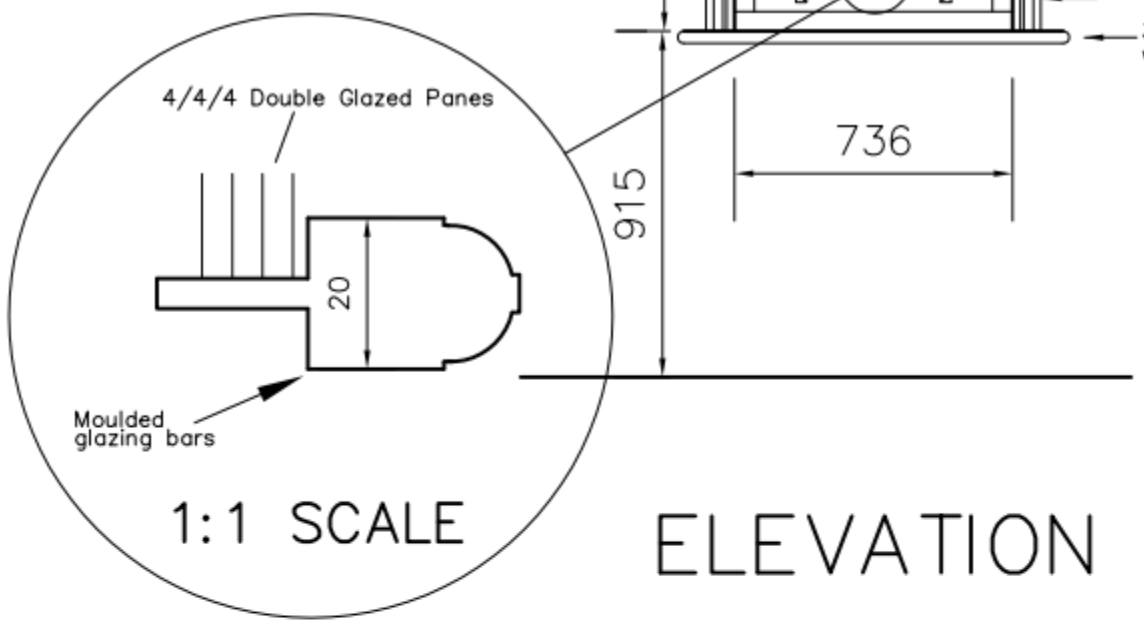

ELEVATION

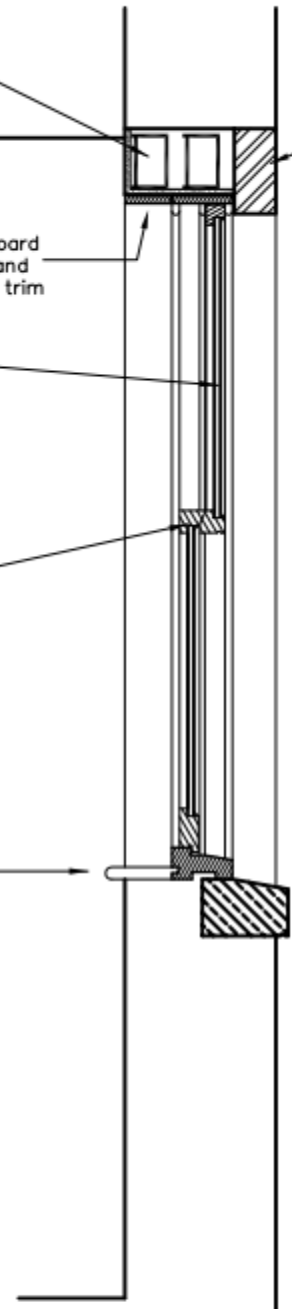

SECTION

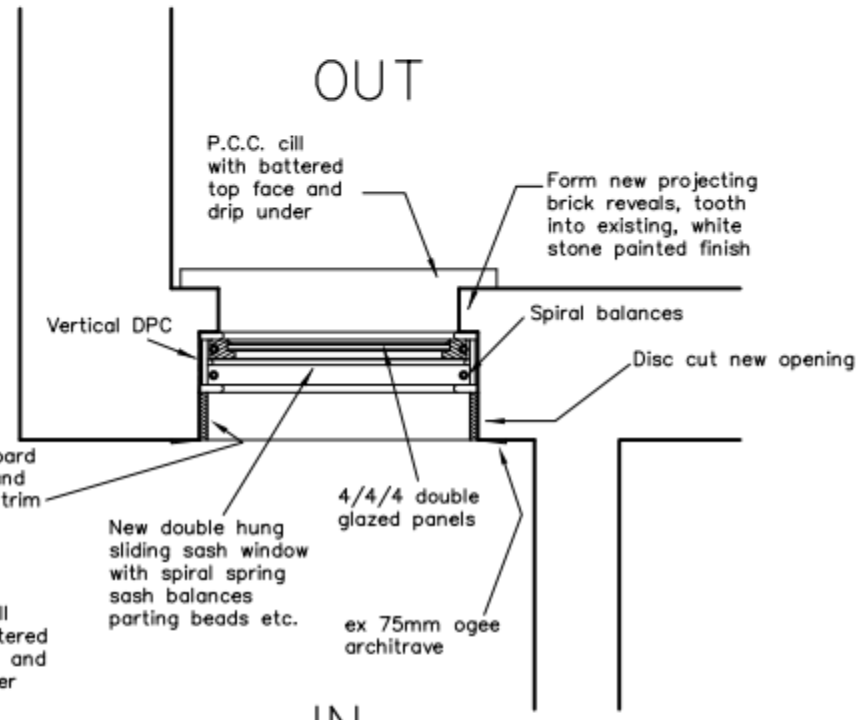

PLAN

THE ROYAL
FLAT 4
NEW HALL WINDOW

Scale 1:20
Drawn MHC
Date 04/11/04

Revisions

A. Spiral Balances. 24/11/04
B. Height adjusted. 28/04/06
C. Glazing bar section added. 12/12/11

Martin Critchley
Consultants Ltd.
Burgan House, 8–10 East Street
Havant, Hampshire, PO9 1AQ.
023 92 474 919
critchleyarchitect@hotmail.com

9348–615 C