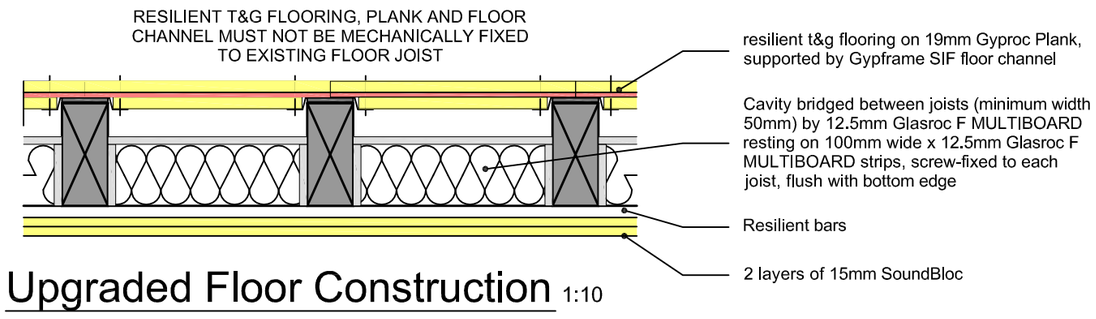

Upgraded Floor Construction 1:10

PLAN AND DETAILS TO BE READ IN CONJUNCTION WITH SPECIFICATION NOTES

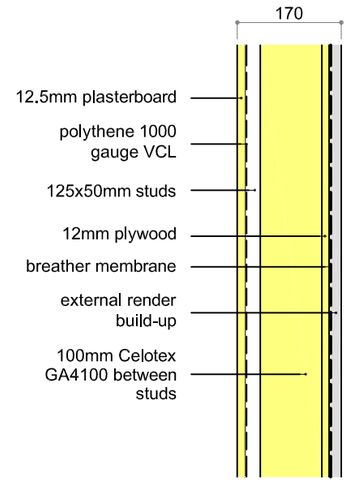

Wall/Lining Type A 1:10

Wall/Lining Type B 1:10

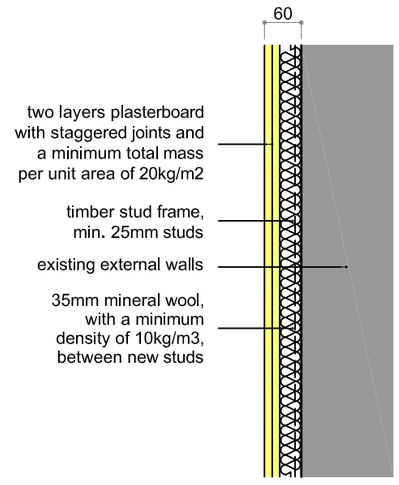

Wall/Lining Type C 1:10

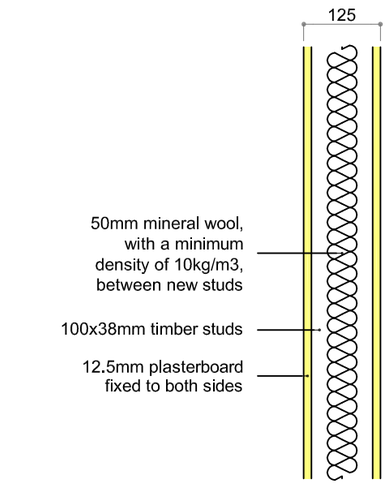

Wall/Lining Type D 1:10

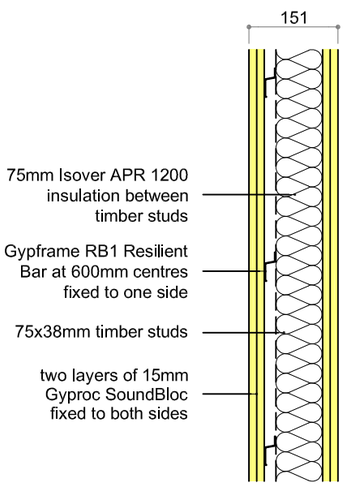

Wall/Lining Type E 1:10

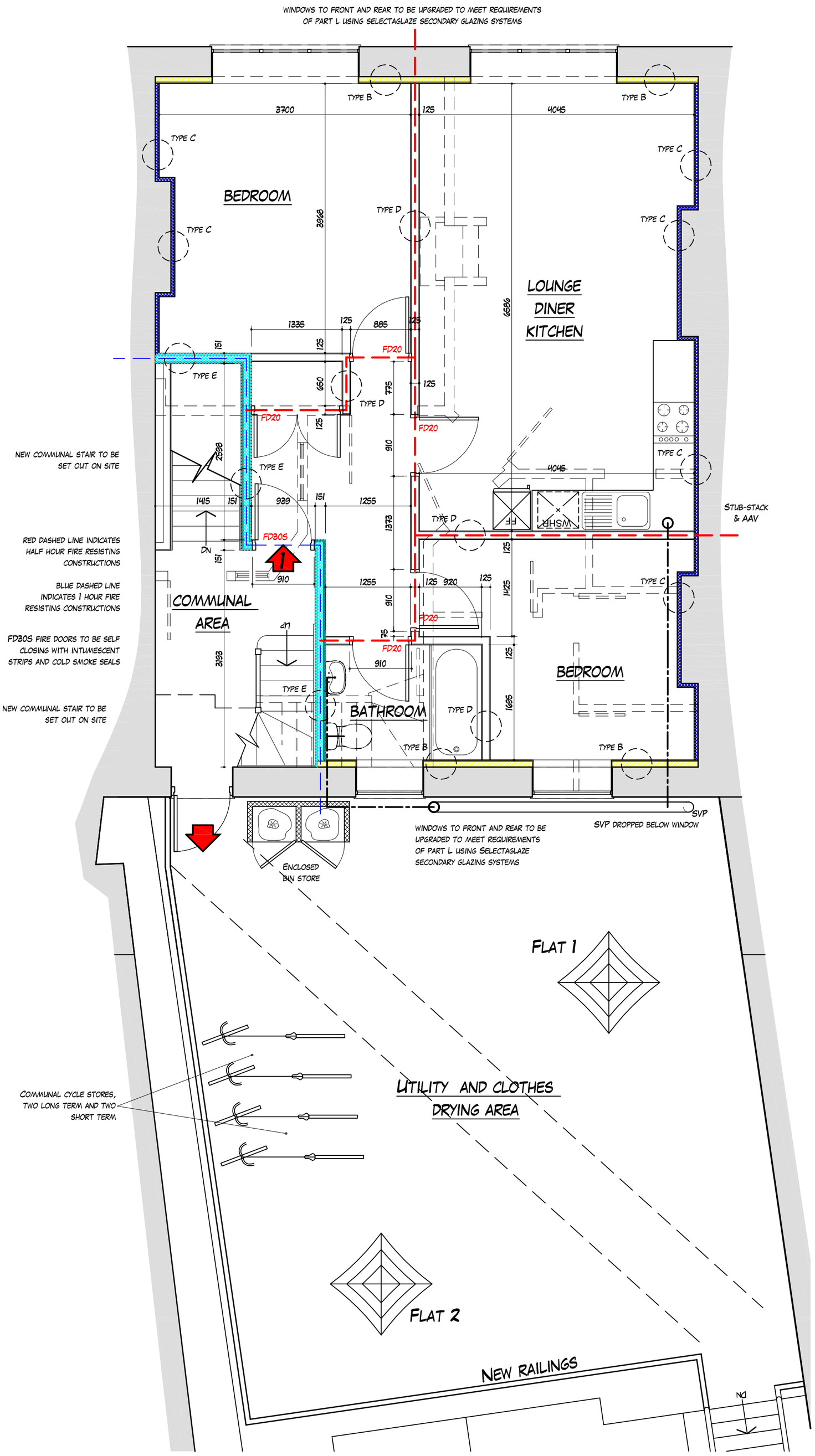

First floor as proposed 1:50

© Copyright Spitfire Architectural Consultants Ltd.

22A Cornfield Road, Eastbourne, BN21 4QE - 01323 431 892 - www.spitfirearchitecture.co.uk
SPITFIRE ARCHITECTURE

Drawing No: 1202.13 A
Scale: As shown @ A2
Date: December 2011

Drawing: First Floor Plan as Proposed

Client: South Alliance Investments

Project: Proposed conversion to two flats 6 West Street, Havant

Revisions: A - Dec 2011 - Lobby added, minor dimensional changes to layout - DK

This drawing has been produced for a particular purpose. To ensure that this purpose is fulfilled and a high quality project is achieved, please observe the following:
- All dimensions shown are to be checked on site before work commences.
- Any discrepancies or errors found on this drawing MUST be reported to its originator immediately, to comply with any insurances or guarantees.
- All goods, materials and workmanship are to comply with the current Building Regulations and any other requirements as the local/statutory authorities' enforcement officer may consider necessary.

IF IN DOUBT ABOUT ANY ELEMENT OF THIS DRAWING, CALL SPITFIRE

Checked By: DJK
Drawn By: KPL