Structural Timber
All Structural timbers to be stress graded to min C16. All timbers to be preservative treated

Suspended Concrete Floor Slab/raft
Floor Slab comprising 65mm well compacted sand and cement screed on minimum 150mm CUBE6 or similiar approved i beam and block flooring system (designed to manufacturers recomendations) supported within steel beam frame (guide plan shown on floor plan in red) to structural engineers / manufacturers specifications spanning between 600mm x 600mm pile foundations to a depth of minimum 1000mm to the satisfaction of the building control officer, all to be excavated by hand under supervision of the arbiculteral consultant. The raft should have a 150mm air gap below which is ventalated at the base of the garage walls and the ground surface should be protected by cellweb mating to ensure the tree roots are not compacted during construction

Wall Construction
105mm outer skin of brick with brick support piers provided at corners and central points to walls. to approval of building control officer DPC minimum 150mm above ground level. Movement joints to be provided as per block / brick manufacturers requirements

Pitched Roof Construction
25 degree pitched roof.Plain Tiles on 25 x 38 mm tanalised timber battens on type 1F undertile felt on cut roof provided by specialist carpenter fixed to internal brickwork
at maximum 1800mm centres with 30mm metal straps. Fixings to be as per manufacturers instructions to satisfy wind loading requirements and the requirements of the
local authority building officer.
Roof structures to be designed constructed fixed and braced in accordance with BS 5268 pt 3 *by specialist (calculations to be provided)*and to the full approval of the
building control officer. New half round white PVC guttering on gutter brackets with 63mm round white rwps to existing surface water drainage system

Door
Glazing to door to have safety glass in accordance with BS 6206

Ventilation
Ventilation to provide a minimum of 1/20th of the floor area of the relevant room.

Electrical / lighting
All work to conform to BS 7671 and IEE regulations17th edition wiring guidance and building regulations part P (electrical safety) by a competent person registered with an electrical self certification scheme (BRE,BSI,ELECA,NAPIT or NICEIC) position and number of lights to be agreed with contractor prior to contract agreement
Installation inspection and test certificate to be issued to the client within 30 days of completion and a copy of certificate and evidence of electrical competency to be forwarded to building control officer within the same time frame. Lighting to be energy efficient throughout the building

Drainage
Surface drainage to soakaway 1m3 and 5m from buildings
Any new storm drainage to comply with BS 6367:1983. 100mm diameter plastic in pea shingle surround , laid to 1:40 gradient to existing system Single stack drainage above ground to comply with BS4514 rainwater goods as per part h3 of building regulations.
Any existing services and soil pipes / drains are to be protected with suitable lintels where they pass through the line of walls / foundations. All drainage to the approval of the building inspector.

Lintels and steels
All lintels in new wall construction to be catnic, or similiar approved; All lintels over door openings to be p c lintels with minimum 100mm end bearing as per manufacturers recommendations size governed by opening span and loading as per manufacturers recommendations
All UBs to structural engineers calculations. All to have 100mm bearings with concrete padstone to structural engineers calculations

PERMIT

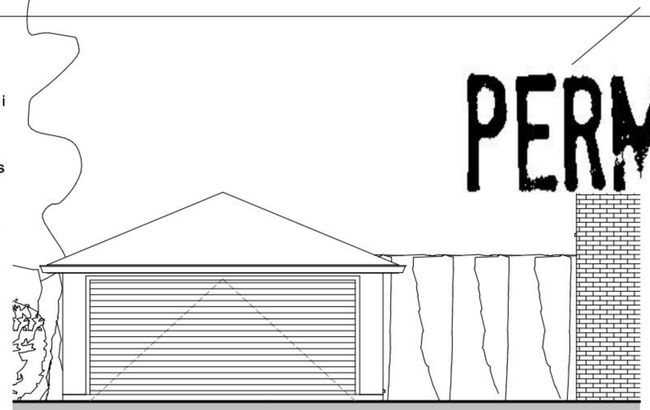

North Elevation 1:50



South Elevation 1:50

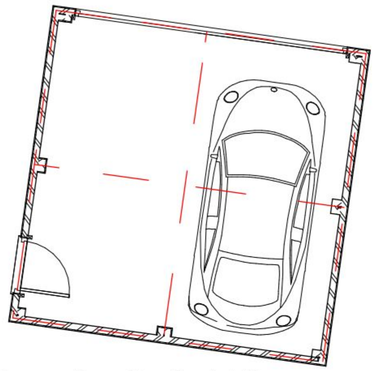

Floor plan Scale 1:50

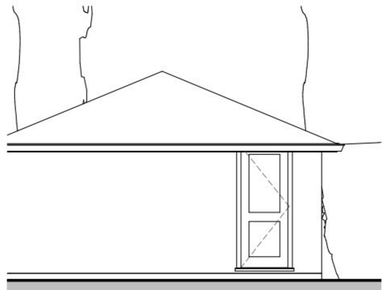

West Elevation 1:50

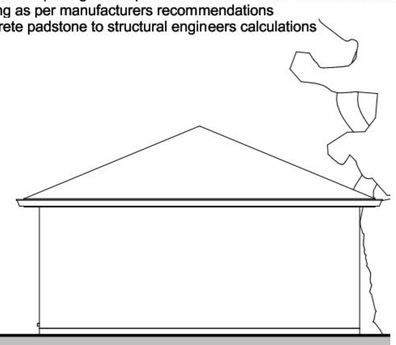

East Elevation 1:50

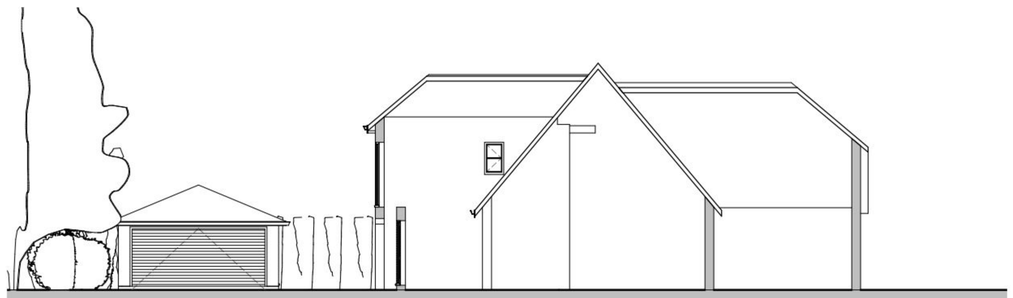

Site Section Scale 1:100

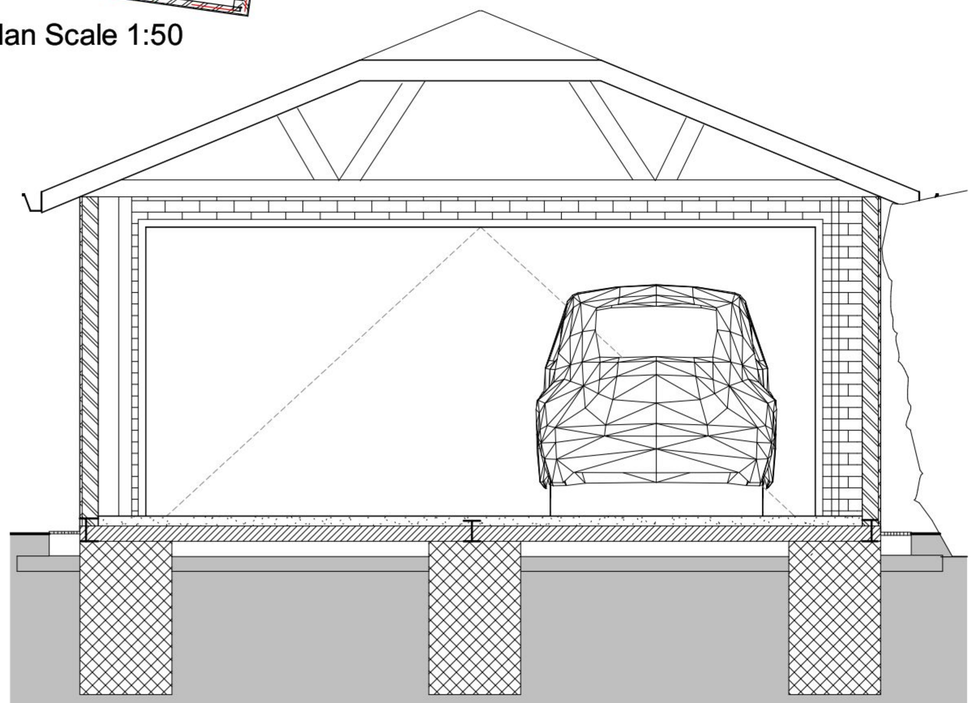

Section Scale 1:20

IJ Murray Associates

www.ijma.co.uk

IJ Murray Associates
173 Havant Road
Hayling Island
Hampshire
PO11 0LF
Phone 02392469004
Mob 07779 246915
e-mail ian@ijma.co.uk

No.	Description	Date

Mr Haffenden
66 Sinah Lane
Hayling Island

Elevations etc

Project number	Project Number
Date	Issue Date
Drawn by	Author
Checked by	Checker

A102

Scale: As indicated

07/06/2011 17:59:52