PERMIT

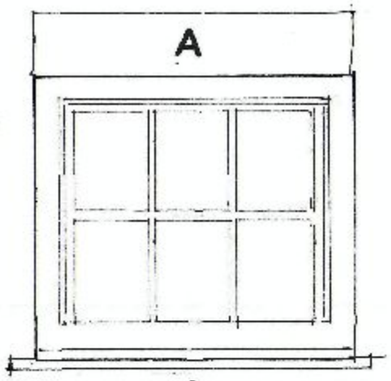

SECOND FLOOR WINDOW 1:20

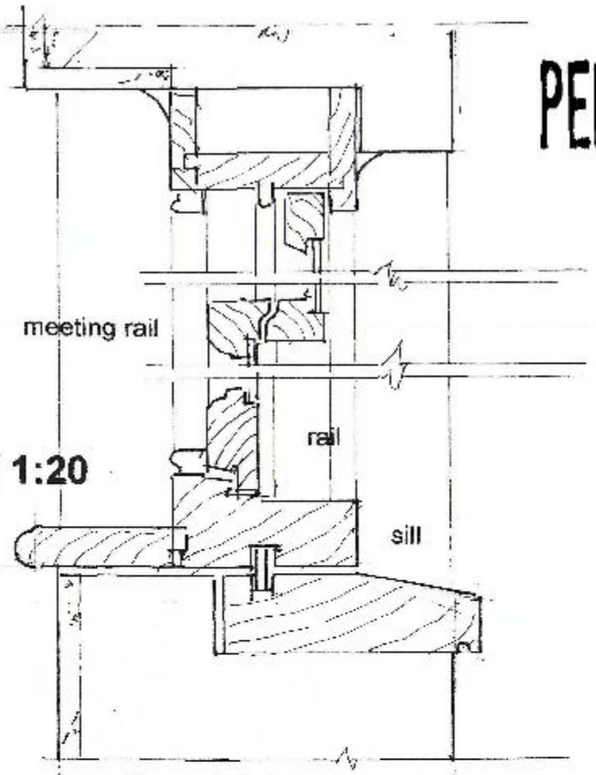

section AA 1:5

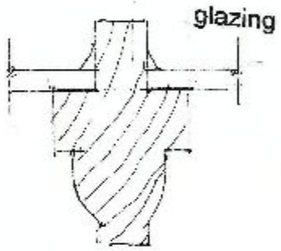

ovolo glazing bar 1:1

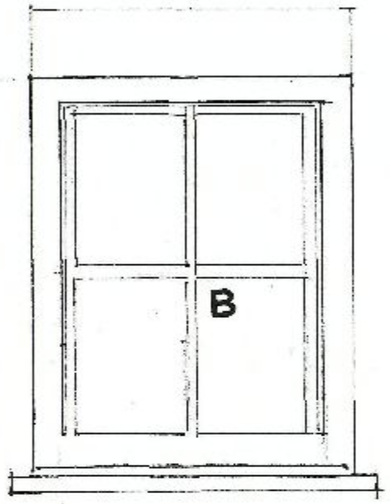

FIRST FLOOR WINDOW 1:20

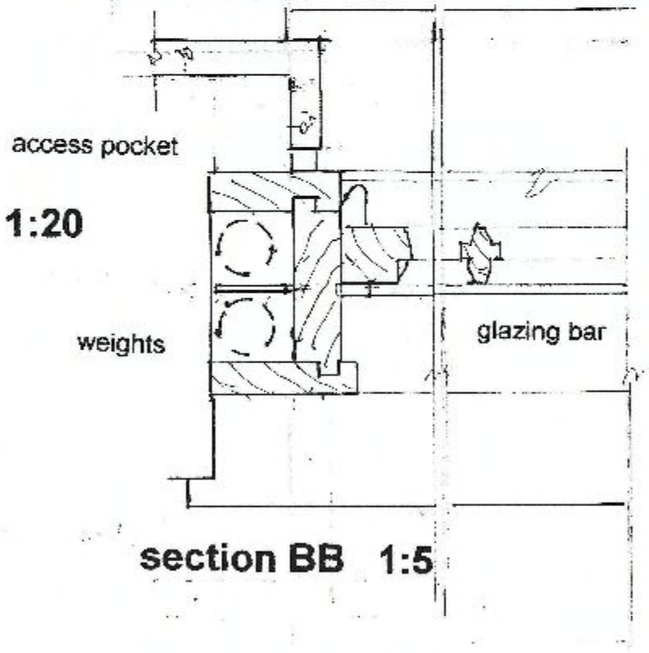

section BB 1:5

HAVANT BOROUGH COUNCIL
15 FEB 2011
RECEIVED

RIBA
Chartered Practice

John Groom Chartered Architect
32A High Street, Emsworth, Hampshire PO10 7AW
T 01243 372560 M 07780 997563
johngroom@freeuk.com
www.johngroomarchitect.co.uk

JOB: Conversion of office space to one apartment
LOCATION: Key Print, 2 Queen Street, Emsworth
DRG TITLE: Details of sliding sash windows
SCALE: 1:20 1:5 1:1 DRAWN: JG
DRG NO: 10/242/9 DATE. 9 February 2011