marstair



TECHNICAL MANUAL

for IMPACT-L WALL MOUNTED

SPLIT SYSTEMS.

This manual provides technical and installation information for **IMPACT-L WALL MOUNTED** split systems comprising:

INDOOR UNIT	537 series **IMPACT-L**
MATCHED WITH	550 series MCU or MCU+ condensing units 551 series MHPUL heat pump units 542 series DCUE ducted condensing units.

INDEX

		PAGE
GENERAL	Part numbers	2
	Dimensions and weights	3 - 4
	Unit features/accessories	4
SELECTION	Unit combinations, performance data	5
	Optional electric heating, airflows	6
	Sound power and sound pressure levels	6 - 7
ELECTRICAL	Electrical data, recommended fuse sizes	8 - 10
UNIT INSTALLATION	IMPACT-L, condensate removal, air deflection	11 - 12
	MCU(+)/MHPUL units and DCUE units	13 - 15
	Pipework, restrictors	16 - 18
	PCB configuration	19
	Electrical connections	19
	IMPACT-L remote controller mounting	20
	Evacuating and charging	20 - 21
WIRING DIAGRAMS	IMPACT-L units	22
	MCU(+)/MHPUL	23 - 25
	DCUE	25 - 26
	Interconnection	27 - 31
OPERATION	User maintenance	31
	IMPACT-L remote controller operation	32
IMPACT-L	Electric heaters	34
	Condensate pump	36
FAULT FINDING	All units	38
	Displays, diagnostics	38
COMPONENT IDENTIFICATION	Exploded views of units with component identification	40 - 42

TEV Ltd.,
Armytage Road, Brighouse,
West Yorkshire. HD6 1QF, UK.
Tel: +44 (0) 1484 405600
Fax: +44 (0) 1484 405620
Email: sales@marstair.com

53799174-07

IMPACT-L WALL MOUNTED SPLIT SYSTEMS

The IMPACT-L WALL MOUNTED range of split systems comprises 537 series IMPACT-L wall mounted indoor units, 550 series condensing units and 551 series heat pump outdoor units, or 542 series electronic ducted condensing units.

By choosing appropriate combinations, the installer can provide:

AIR CONDITIONERS with a cooling range of 1.65 - 9.9 kW,

or HEAT PUMP systems with a cooling range of 2.0 - 8.6 kW, and a heating range of 1.9 - 9.4 kW with an outdoor temperature of minus 1°C

PART NUMBERS

537 Series IMPACT-L INDOOR UNITS

Electronic	IMPACT 20L	IMPACT 40L	IMPACT 60L	IMPACT 80L	IMPACT 100L
Part Number	53700064	53700065	53700066	53700067	53700068

550 Series CONDENSING UNITS (MCU/MCU+)

MCU 1Ph Recip	MCU 15	MCU 30	MCU 40
R407C	55022045	55022047	55022048
R22	55022151	55022153	55022154

MCU 3Ph Recip	MCU 30	MCU 40
R407C	55022053	55022054
R22	55022074	55022075

MCU 1Ph Scroll	MCU 60	MCU 80	MCU 90
R407C	55022050	55022051	55022052
R22	55022071	55022072	55022073

MCU 3Ph Scroll	MCU 60	MCU 80	MCU 90	MCU 100
R407C	55022056	55022057	55022058	55022059
R22	55022077	55022078	55022079	55022080

MCU+ 1Ph Recip	MCU+ 15	MCU+ 30	MCU+ 40
R407C	55022002	55022004	55022005
R22	55022155	55022157	55022158

MCU+ 3Ph Recip	MCU+ 30	MCU+ 40
R407C	55022011	55022012
R22	55022032	55022033

MCU+ 1Ph Scroll	MCU+ 60	MCU+ 80	MCU+ 90
R407C	55022007	55022008	55099009
R22	55022029	55022030	55022031

MCU+ 3Ph Scroll	MCU+ 60	MCU+ 80	MCU+ 90	MCU+ 100
R407C	55022014	55022015	55022016	55022017
R22	55022035	55022036	55022037	55022038

551 Series HEAT PUMP UNITS (MHPUL)

MHPUL 1Ph Recip	MHPUL 15	MHPUL 30
R407C	55122040	55122042
R22	55122080	55122082

MHPUL 3Ph Recip	MHPUL 30
R407C	55122048
R22	55122066

MHPUL 1Ph Scroll	MHPUL 50	MHPUL 80	MHPUL 90
R407C	55122044	55122046	55122047
R22	55122062	55122064	55122065

MHPUL 3Ph Scroll	MHPUL 50	MHPUL 80	MHPUL 90
R407C	55122050	55122052	55122053
R22	55122068	55122070	55122071

542 Series DUCTED CONDENSING UNITS (DCUE)

Electronic DCUE 1Ph	DCUE 15	DCUE 30	DCUE 40	DCUE 60	DCUE 80
R22	54200002	54200004	54200005	54200007	54200008
R407C	54200027	54200029	54200030	54200032	54200033
Electronic DCUE 3Ph	--	DCUE 30	DCUE 40	DCUE 60	DCUE 80
R22	--	54200015	54200016	54200018	54200019
R407C	--	54200035	54200036	54200038	54200039

UNPACKED DIMENSIONS AND WEIGHTS

IMPACT INDOOR UNITS

Model	IMPACT				
	20L	40L	60L	80L	100L
HEIGHT mm	490	490	490	490	490
WIDTH mm	550	850	1150	1450	1750
DEPTH mm	204	204	204	204	204
WEIGHT kg	14	20	24	30	34

CONDENSING UNITS

Model		MCU(+) 15	MCU(+) 30	MCU(+) 40	MCU(+) 60	MCU(+) 80	MCU(+) 90	MCU(+) 100
HEIGHT* mm		620	620	620	720	720	820	820
WIDTH mm		900	900	900	1000	1000	1000	1000
DEPTH mm		300	300	300	300	300	350	350
WEIGHT kg	1 Ph	45	48	53	65	66	76	--
	3 Ph	--	48	53	63	64	73	81

Includes 60mm for mounting feet.

HEAT PUMP OUTDOOR UNITS

Model		MHPUL 15	MHPUL 30	MHPUL 50	MHPUL 80	MHPUL 90
HEIGHT* mm		620	620	720	820	820
WIDTH mm		900	900	1000	1000	1000
DEPTH* mm		300	300	300	350	350
WEIGHT kg	1 Ph	47	50	64	75	77
	3 Ph	--	50	62	72	75

Includes 60mm for mounting feet.

DUCTED CONDENSING UNITS

Model	DCUE 15	DCUE 30	DCUE 40	DCUE 60	DCUE 80
HEIGHT* mm	560	560	560	625	625
WIDTH mm	1075	1075	1075	1245	1245
DEPTH mm	565	565	565	565	565
WEIGHT kg	69	70	72	81	84

Includes 60mm for DCUE and 115mm for DHPUE mounting feet.

PACKED DIMENSIONS AND WEIGHTS

IMPACT-L INDOOR UNITS

Model	IMPACT				
	20L	40L	60L	80 L)	100 L
HEIGHT mm	616	616	616	616	616
WIDTH mm	720	1020	1320	1620	1920
DEPTH mm	290	290	290	290	290
WEIGHT kg	16	22	27	33	37

CONDENSING UNITS

Model		MCU(+) 15	MCU(+) 30	MCU(+) 40	MCU(+) 60	MCU(+) 80	MCU(+) 90	MCU(+) 100
HEIGHT mm		620	620	620	720	720	820	820
WIDTH mm		980	980	980	1080	1080	1090	1090
DEPTH mm		340	340	340	340	340	390	390
WEIGHT kg	1 Ph	47	50	55	67	68	78	--
	3 Ph	--	50	55	65	66	75	83

HEAT PUMP OUTDOOR UNITS

Model		MHPUL 15	MHPUL 30	MHPUL 50	MHPUL 80	MHPUL 90
HEIGHT mm		620	620	720	820	820
WIDTH mm		980	980	1080	1090	1090
DEPTH mm		340	340	340	390	390
WEIGHT kg	1 Ph	49	52	66	77	79
	3 Ph	--	52	64	74	77

DUCTED CONDENSING UNITS

Model	DCUE 15	DCUE 30	DCUE 40	DCUE 60	DCUE 80
HEIGHT mm	580	580	580	650	650
WIDTH mm	1090	1090	1090	1270	1270
DEPTH mm	610	610	610	610	610
WEIGHT kg	74	76	76	86	90

FEATURES / ACCESSORIES

INDOOR UNITS

	IMPACT-L
Adjustable air deflectors	STD
De-ice thermostat	STD
Electric heating	*
3 fan speeds	STD
Remote infrared control	STD
Programmable timer	STD
Condensate pump	*
Flame retardant material	STD
Long life washable filter	STD
High or low level mounting	STD

Key: * = factory / site option. STD = standard. --- = not available

OUTDOOR/DUCTED UNITS

	MCU	MCU+	MHPUL	DCUE
CSR hard start (1 phase)	*	*	*	*
PTC hard start (1 phase)	*	*	*	*
Fan speed head pressure control	*	STD	STD	STD
LP cutout Auto	*	STD	STD	STD
HP cutout auto (with manual backup)	*	*	*	STD
HP cutout auto	---	STD	STD	---
HP cutout manual	*	*	*	
Isolator	*	*	---	---
3 minute start time delay	*	STD	STD	STD
Wall mounting brackets	*	*	*	*
Contactor	STD	STD	STD	STD
Overload (standard on 3Ph)	*	*	*	*
MHPUL condensate drain	---	---	*	---
Low ambient start	---	---	---	STD
Ducting kits	---	---	---	*
Volt free relay	*	*	*	---

Key: * = site option. STD = standard. --- = not available

PRODUCT SELECTION

Combinations of indoor unit and (ducted) condensing / heat pump unit can be chosen to give either air conditioning or heat pump systems.

UNIT COMBINATIONS

Air Conditioning Systems				Heat Pump Systems	
IMPACT-L	MCU(+) or DCUE	IMPACT-L	MCU(+) or DCUE	IMPACT-L	MHPUL unit
20	15			20	15
40	30	40	40	40	30
60	40	60	60	60	50
80	80	80	90*	80	80
100	90*	100	100*	100	90

**** Ducted unit not available at this size***

AIR CONDITIONER PERFORMANCE DATA (kW)

IMPACT-L + MCU(+) or DCUE	UK CONDITIONS ROOM 21°C/15°C AMBIENT 27°C/19°C						NEMA (EUROVENT) ROOM 27°C/19°C AMB 35°C/24°C			TROPICAL ROOM 29°C/19°C AMB 46°C/24°C		
	MIN SPEED EVAP			MAX SPEED EVAP			MAX SPEED EVAP			MAX SPEED EVAP		
	TOTAL	SHR	SENS	TOTAL	SHR	SENS	TOTAL	SHR	SENS	TOTAL	SHR	SENS
20L + 15	1.4	0.71	1.1	1.9	0.77	1.5	2.1	0.78	1.6	1.6	0.98	1.6
40L + 30	2.3	0.77	1.8	3.1	0.83	2.5	3.4	0.84	2.9	2.9	0.96	2.8
40L + 40	2.7	0.74	2.0	3.6	0.78	2.8	4.0	0.78	3.1	3.2	0.98	3.1
60L + 40	3.0	0.78	2.3	3.9	0.88	3.5	4.4	0.86	3.8	3.7	0.99	3.7
60L + 60	3.7	0.74	2.7	5.1	0.80	4.1	5.4	0.81	4.4	4.4	0.98	4.3
80L + 80	4.2	0.74	3.2	5.7	0.87	4.9	6.4	0.85	5.4	6.0	0.92	5.5
80L + 90*	5.2	0.71	3.7	6.5	0.83	5.4	8.1	0.76	6.2	7.3	0.87	6.4
100L + 90*	5.6	0.73	4.1	7.5	0.84	6.3	8.8	0.84	7.4	8.1	0.88	7.1
100L + 100*	6.5	0.73	4.8	9.3	0.77	7.2	9.9	0.76	7.5	8.7	0.87	7.6

**** Ducted unit not available in this size***

For MED speed duties, interpolate between MIN speed and MAX speed duties.
Rating conditions are to BS2852: Part 1: 1982: UK condition C; NEMA condition A; Tropical condition B.

HEAT PUMP PERFORMANCE DATA

a. Cooling, (MAX speed outdoor unit fan). (kW)

	UK CONDITIONS ROOM 21°C/15°C AMBIENT 27°C/19°C						NEMA (EUROVENT) R27°C/19°C A35°C/24°C		
	MIN SPEED INDOOR FAN			MAX SPEED INDOOR FAN			MAX SPEED INDOOR FAN		
IMPACT-L	TOTAL	SHR	SENS	TOTAL	SHR	SENS	TOTAL	SHR	SENS
20L	1.2	0.75	0.9	1.7	0.81	1.4	2.0	0.78	1.6
40L	2.2	0.78	1.7	3.0	0.83	2.5	3.3	0.85	2.8
60L	3.5	0.72	2.6	4.8	0.82	3.9	5.3	0.81	4.3
80L	4.9	0.77	3.8	6.3	0.82	5.1	7.1	0.85	6.0
100L	6.1	0.73	4.4	7.9	0.79	6.3	8.6	0.83	7.2

b. Heating, (Room 20°C/12°C, outdoor unit fan at MAX speed) (kW)

	HEATING OUTPUT AT 7°C AMBIENT		HEATING OUTPUT AT -1°C AMBIENT	
	MAX SPEED INDOOR FAN		MAX SPEED INDOOR FAN	
IMPACT-L	kW	COP	kW	COP
20L	2.3	2.23	1.9	2.00
40L	4.0	2.78	3.1	2.30
60L	5.4	2.60	4.3	2.20
80L	8.7	2.90	7.2	2.70
100L	11.2	3.02	9.4	2.93

OPTIONAL ELECTRIC HEATING

IMPACT-L	at 230V 50Hz (kW)	at 240V 50Hz (kW)
20L	0.7	0.8
40L	1.4	1.5
60L	2.1	2.25
80L	2.75	3.0
100L	3.2	3.5

AIRFLOWS IMPACT UNITS

	MIN Speed		MED Speed		MAX Speed	
IMPACT-L	CFM	m^3/s	CFM	m^3/s	CFM	m^3/s
20L	125	0.06	170	0.08	210	0.10
40L	275	0.13	345	0.16	420	0.20
60L	360	0.17	440	0.21	645	0.30
80L	465	0.22	695	0.33	905	0.43
100L	550	0.26	750	0.35	1110	0.52

AIRFLOWS OUTDOOR/DUCTED UNITS

		MIN Speed		MAX Speed	
Model		CFM	m^3/s	CFM	m^3/s
MCU(+) 15	MHPUL 15	1200	0.57	1720	0.81
MCU(+) 30	-	1200	0.57	1720	0.81
MCU(+) 40	MHPUL 30	1080	0.51	1530	0.72
-	-	-	-	-	-
MCU(+) 60	MHPUL 50	1250	0.59	1660	0.78
MCU(+) 80	-	1250	0.59	1660	0.78
MCU(+) 90	MHPUL 80	1440	0.68	2420	1.14
MCU(+) 100	MHPUL 90	1440	0.68	2420	1.14

	Min. Speed		Max. Speed	
Model	CFM	m^3/s	CFM	m^3/s
DCUE 15	680	0.31	930	0.44
DCUE 30	685	0.32	885	0.42
DCUE 40	680	0.31	800	0.38
-	885	0.42	1115	0.53
DCUE 60	885	0.42	1115	0.53
DCUE 80	740	0.34	1040	0.48
-	-	-	-	-
-	-	-	-	-

SOUND POWER and SOUND PRESSURE LEVELS

537 SERIES IMPACT-L

		SOUND POWER LEVELS							SOUND PRESSURE LEVELS	
		Frequency Hz								
MODEL	SPEED	125	250	500	1K	2K	4K	dBA	dBA	NC
20L	Min	42.1	48.6	52.2	47.4	40.7	34.8	52.1	31.6	26
	Med	45.5	51.3	54.6	51.8	45.3	39.1	55.6	35.1	30
	Max	48.3	53.9	57.2	55.2	48.8	42.9	58.7	38.2	33
40L	Min	45.9	51.4	53.3	51.3	46.9	44.6	55.6	35.1	30
	Med	47.5	53.1	55.4	53.5	48.9	45.8	57.6	37.1	32
	Max	50.7	55.6	58.0	56.6	51.9	48.0	60.4	39.9	35
60L	Min	56.4	51.1	52.8	50.2	47.2	42.4	55.2	34.7	27
	Med	56.6	53.0	55.4	52.9	48.6	43.6	57.3	36.8	31
	Max	58.0	57.8	60.3	58.9	53.7	48.9	62.6	42.1	37
80L	Min	46.5	49.5	51.2	47.6	41.4	34.3	51.9	31.4	25
	Med	48.2	50.6	52.6	49.1	43.2	35.7	53.3	32.8	26
	Max	53.4	57.5	60.0	58.3	53.0	47.6	62.0	41.5	36
100L	Min	43.3	47.5	46.8	44.7	40.5	38.3	49.7	29.2	22
	Med	48.6	51.1	52.3	49.7	43.6	39.4	53.8	33.3	27
	Max	54.9	59.9	62.6	61.5	56.2	52.0	65.1	44.6	40

Sound Power Levels were obtained in full conformity with BS 4196: Part 5: 1981. Quantities are shown in dB with a standard reference of 1 pW.
Sound Pressure Levels are dB relative to 2 x 10^{-5}N/m^2 and are calculated from the results under anechoic conditions and are quoted as an average of all points on a hemisphere of a radius of 3m away from the centre of the unit.

SOUND POWER and SOUND PRESSURE LEVELS

550/551 SERIES MCU, MCU+ and MHPUL

MAXIMUM SPEED

MCU(+)	MHPUL	Compressor	SOUND POWER LEVELS Frequency Hz 125	250	500	1K	2K	4K	dBA	SOUND PRESSURE LEVELS dBA	NC
15	15	Recip	77.2	67.3	68.7	64.7	60.0	53.9	69.7	49.2	44
30	30	Recip	77.4	67.5	68.5	64.8	60.2	53.8	69.8	50.0	44
40	--	Recip	77.3	67.4	68.6	64.7	60.1	53.9	69.8	49.3	44
--	50	Scroll	73.6	68.2	67.1	65.5	61.1	54.3	69.7	49.2	44
60	--	Scroll	72.9	67.7	67.8	66.4	61.9	54.1	70.3	49.8	45
80	--	Scroll	70.9	68.6	68.1	65.3	59.5	53.8	69.7	49.2	43
--	80	Scroll	75.4	72.9	69.1	68.8	62.6	56.6	72.4	51.9	47
90	90	Scroll	81.8	71.8	69.2	68.6	63.1	57.4	72.8	52.3	47
100	--	Scroll	79.4	73.7	71.5	68.5	63.8	58.1	73.4	52.9	47

MINIMUM SPEED

MCU(+)	MHPUL	Compressor	SOUND POWER LEVELS Frequency Hz 125	250	500	1K	2K	4K	dBA	SOUND PRESSURE LEVELS dBA	NC
15	15	Recip	65.4	61.7	65.2	58.4	53.1	47.7	64.4	43.9	40
30	30	Recip	65.6	61.3	65.0	58.5	53.3	47.6	64.5	43.7	40
40	--	Recip	65.5	61.2	65.1	58.4	53.2	47.7	64.5	43.7	40
--	50	Scroll	67.4	64.1	66.0	63.6	58.7	51.8	67.7	47.2	42
60	--	Scroll	67.4	64.3	67.1	66.8	60.7	51.7	69.7	49.2	45
80	--	Scroll	69.4	66.5	66.9	62.1	56.1	51.6	67.5	47.0	41
--	80	Scroll	67.5	63.4	64.4	64.2	57.4	51.0	67.0	46.5	43
90	90	Scroll	79.0	65.4	64.9	61.5	58.5	53.7	67.6	47.1	40
100	--	Scroll	75.3	69.4	70.9	63.7	59.7	53.6	70.4	49.9	46

Sound Power Levels were obtained in full accordance with the direct method of ISO 3741: 1988. Quantities are shown in dB with a standard reference of 1 pW.
Sound Pressure Levels are dB relative to 2 x 10^{-5}N/m^2 and are calculated from the results under anechoic conditions and are quoted as an average of all points on a sphere of a radius of 3m away from the centre of the unit (in cooling mode); (add 3dBA or 3NC for units at an intersection of a wall, add 1dBA or 1NC for high level wall mounted units).

SOUND PRESSURE LEVELS -- DUCTED CONDENSING UNITS AND DUCTED HEAT PUMP UNITS

Measurement Point	Unit Size	Fan Speed	dBA	NC
3m from unit in void	DCUE 15, 30, 40 DHPUE 15, 30	Max	52	46
		Min	35	28
	DCUE 60, 80 DHPUE 50	Max	54	48
		Min	44	31
Office area	DCUE 15, 30, 40 DHPUE 15, 30	Max	37	26
		Min	30	15
	DCUE 60, 80 DHPUE 50	Max	42	28
		Min	32	17
3m from discharge grille	DCUE 15, 30, 40 DHPUE 15, 30	Max	52	46
		Min	34	27
	DCUE 60, 80 DHPUE 50	Max	52	44
		Min	40	28

All readings taken from a typical application of a unit suspended in a ceiling void complete with 5m of insulated ducting, conditioning an office directly below. Sound Pressure Levels are dB relative to 2x10^{-5}N/m^2.

ELECTRICAL DATA (Cooling Data rated at NEMA conditions) (Heating Data rated at 20°C/12°C indoor; 7°C/6°C ambient)

a) R22 Air Conditioning Systems (with MCU/MCU+)

MODEL COMBINATION	Single Phase Supply 230Volts - 50Hz					Three Phase Supply 400Volts - 50Hz				
	INPUT		FULL LOAD AMPS		SYSTEM MAX. STARTING CURRENT	INPUT		FULL LOAD AMPS		SYSTEM MAX. STARTING CURRENT
	Cooling	Heating	Cooling	Heating		Cooling	Heating	Cooling	Heating	
IMPACT + MCU(+)	kW	kW	AMPS	AMPS	AMPS	kW	kW	A/PH	A/PH*	A/PH
20L + 15	0.9	0.9	4.3	3.7	22	--	--	--	--	--
40L + 30	1.2	1.7	6.2	7.3	33	1.7	1.7	4.2	7.3	19
40L + 40	1.4	1.7	7.3	7.3	33	2.1	1.7	5.4	7.3	23
60L + 40	1.4	2.5	7.4	10.8	33	2.1	2.5	5.5	10.8	23
60L + 60	2.3	2.5	10.3	10.8	62	2.3	2.5	4.5	10.8	33
80L + 80	2.9	3.3	11.4	14.4	77	2.9	3.3	4.9	14.4	41
80L + 90	4.0	3.3	16.6	14.4	116	4.0	3.3	7.4	14.4	50
100L + 90	4.0	3.4	16.8	14.4	116	4.0	3.4	7.6	14.4	50
100L + 100	--	--	--	--	--	4.1	3.4	7.7	14.4	53

b) R22 Air Conditioning Systems (with DCUE)

MODEL COMBINATION	Single Phase Supply 230Volts - 50Hz					Three Phase Supply 400Volts - 50Hz				
	INPUT		FULL LOAD AMPS		SYSTEM MAX. STARTING CURRENT	INPUT		FULL LOAD AMPS		SYSTEM MAX. STARTING CURRENT
	Cooling	Heating	Cooling	Heating		Cooling	Heating	Cooling	Heating	
IMPACT + DCUE	kW	kW	AMPS	AMPS	AMPS	kW	kW	A/PH	A/PH*	A/PH
20L + 15	1.3	0.9	6.0	4.0	25	--	--	--	--	--
40L + 30	1.8	1.7	8.4	7.6	37	1.8	1.7	3.6	7.6	19
40L + 40	2.3	1.7	10.6	7.6	51	2.3	1.7	4.8	7.6	24
60L + 40	2.3	2.5	10.7	11.1	51	2.3	2.5	4.9	11.1	24
60L + 60	3.1	2.5	14.3	11.1	61	3.1	2.5	6.0	11.1	26
80L + 80	3.2	3.3	17.0	14.7	72	3.2	3.3	7.0	14.7	26

c) R22 Heat Pump Systems (with MHPUL)

MODEL COMBINATION	Single Phase Supply 230Volts - 50Hz					Three Phase Supply 400Volts - 50Hz				
	INPUT		FULL LOAD AMPS		SYSTEM MAX. STARTING CURRENT	INPUT		FULL LOAD AMPS		SYSTEM MAX. STARTING CURRENT
	STD. MODEL	+ ELECT Heating	STD. MODEL	+ ELECT Heating		STD. MODEL	+ ELECT Heating	STD. MODEL	+ ELECT Heating	
IMPACT + MHPUL	kW	kW	AMPS	AMPS	AMPS	kW	kW	A/PH	A/PH*	A/PH
20(E) + 15	0.9	1.7	4.3	7.8	29	--	--	--	--	--
40(E) + 30	1.2	2.8	6.2	13.2	39	1.5	2.8	4.2	11.2	26
60(E) + 50	2.0	4.4	9.1	19.5	43	2.0	4.4	4.4	14.8	33
80(E) + 80	2.9	6.1	11.4	25.4	91	2.9	6.1	4.9	18.9	55
100(E) + 90	4.0	7.0	16.8	30.8	130	4.0	7.0	7.6	21.6	64

*** Max. Phase.**

d) R407C Air Conditioning Systems (with MCU/MCU+)

MODEL COMBINATION	Single Phase Supply 230Volts - 50Hz					Three Phase Supply 400Volts - 50Hz				
	INPUT		FULL LOAD AMPS		SYSTEM MAX. STARTING CURRENT	INPUT		FULL LOAD AMPS		SYSTEM MAX. STARTING CURRENT
	Cooling	Heating	Cooling	Heating		Cooling	Heating	Cooling	Heating	
IMPACT + MCU(+)	kW	kW	AMPS	AMPS	AMPS	kW	kW	A/PH	A/PH*	A/PH
20L + 15	0.9	0.9	6.4	4.0	23	--	--	--	--	--
40L + 30	1.4	1.7	8.7	7.6	37	1.4	1.7	4.5	7.6	19
40L + 40	1.6	1.7	10.8	7.6	51	1.6	1.7	5.7	7.6	23
60L + 40	1.6	2.5	10.9	11.1	51	1.6	2.5	5.8	11.1	23
60L + 60	2.5	2.5	10.2	10.8	62	2.5	2.5	4.6	10.8	33
80L + 80	3.1	3.3	11.9	14.4	77	3.1	3.3	5.3	14.4	41
80L + 90	4.2	3.3	17.3	14.4	116	4.2	3.3	7.5	14.4	50
100L + 90	4.2	3.4	17.5	14.4	116	4.2	3.4	7.7	14.4	50
100L + 100	--	--	--	--	--	4.4	3.4	7.8	14.4	53

e) R407C Air Conditioning Systems (with DCUE)

MODEL COMBINATION	Single Phase Supply 230Volts - 50Hz					Three Phase Supply 400Volts - 50Hz				
	INPUT		FULL LOAD AMPS		SYSTEM MAX. STARTING CURRENT	INPUT		FULL LOAD AMPS		SYSTEM MAX. STARTING CURRENT
	Cooling	Heating	Cooling	Heating		Cooling	Heating	Cooling	Heating	
IMPACT + DCUE	kW	kW	AMPS	AMPS	AMPS	kW	kW	A/PH	A/PH*	A/PH
20L + 15	1.3	0.9	6.0	4.0	25	--	--	--	--	--
40L + 30	1.8	1.7	8.4	7.6	37	1.8	1.7	3.6	7.6	19
40L + 40	2.3	1.7	10.6	7.6	51	2.3	1.7	4.8	7.6	24
60L + 40	2.3	2.5	10.7	11.1	51	2.3	2.5	4.9	11.1	24
60L + 60	3.1	2.5	14.3	11.1	61	3.1	2.5	6.0	11.1	26
80L + 80	3.2	3.3	17.0	14.7	72	3.2	3.3	7.0	14.7	26

f) R407C Heat Pump Systems (with MHPUL)

MODEL COMBINATION	Single Phase Supply 230Volts - 50Hz					Three Phase Supply 400Volts - 50Hz				
	INPUT		FULL LOAD AMPS		SYSTEM MAX. STARTING CURRENT	INPUT		FULL LOAD AMPS		SYSTEM MAX. STARTING CURRENT
	STD. MODEL	+ ELECT Heating	STD. MODEL	+ ELECT Heating		STD. MODEL	+ ELECT Heating	STD. MODEL	+ ELECT Heating	
IMPACT + MHPUE	kW	kW	AMPS	AMPS	AMPS	kW	kW	A/PH	A/PH*	A/PH
20L + 15	0.9	1.7	6.4	9.9	31	--	--	--	--	--
40L + 30	1.4	3.0	8.7	15.7	42	1.4	3.0	4.5	11.5	26
60L + 50	2.1	4.5	9.5	19.9	61	2.1	4.5	4.6	15.0	33
80L + 80	3.1	6.3	11.9	25.9	91	3.1	6.3	5.3	19.3	55
100L + 90	4.2	7.2	17.5	31.5	130	4.2	7.2	7.7	21.7	64

*** Max. Phase.**

ELECTRICAL LOADS (230V / 50 Hz / 1Ph) (A) or (400V / 50 Hz / 3PhN) (A/Ph)

IMPACT

	20L	40L	60L	80L	100L
FAN MOTOR	0.2	0.3	0.4	0.4	0.6
ELECTRIC HEATER (AIR COND.)	3.5	7	10.4	14	14
ELECTRIC HEATER (HEAT PUMPS)	3.5	7	10.4	14	14

MCU(+)

	15	30	40	60	80	90	100
FAN MOTOR	0.6	0.6	0.6	0.6	0.6	1	1
R407C COMPRESSOR (1 PH) NOMINAL FLA	5	7.2	9.3	9.2	10.9	15.9	--
R407C COMPRESSOR (3 PH) NOMINAL FLA	--	2.7	3.9	3.6	4.3	6.1	6.2
R22 COMPRESSOR (1 PH) NOMINAL FLA	3.5	5.3	6.4	9.3	10.4	15.2	--
R22 COMPRESSOR (3 PH) NOMINAL FLA	--	2.7	3.9	3.5	3.9	6	6.1

MHPUL

	15	30	50	80	90
FAN MOTOR	0.6	0.6	0.6	1	1
R407C COMPRESSOR (1 PH) NOMINAL FLA	5	7.2	8.3	10.9	15.9
R407C COMPRESSOR (3 PH) NOMINAL FLA	--	2.7	3.9	4.3	6.1
R22 COMPRESSOR (1 PH) NOMINAL FLA	3.5	5.3	7.9	10.4	15.2
R22 COMPRESSOR (3 PH) NOMINAL FLA	--	2.7	3.4	3.9	6.1

DCUE

	15	30	40	60	80
FAN MOTOR	2.6	2.6	2.6	2.6	2.6
CRANKCASE HEATER	0.25	0.25	0.25	0.25	0.25
R407C COMPRESSOR (1 PH) NOMINAL FLA	5	7.2	8.3	12	14.1
R407C COMPRESSOR (3 PH) NOMINAL FLA	--	2.7	3.9	4.2	4.8
R22 COMPRESSOR (1 PH) NOMINAL FLA	3.5	5.3	6.4	12	14.1
R22 COMPRESSOR (3 PH) NOMINAL FLA	--	2.7	3.9	4.2	4.8

FUSES

The system and its supply/interconnecting wiring must be protected by fuses, preferably High Rupture Current (HRC) motor rated types (EN60269) or miniature circuit breakers (EN60898) or local codes having similar time lag characteristics, that allow starting of the compressor yet still afford close overcurrent protection under running conditions. The ratings below are for HRC motor rated fuses.

FUSES FOR SYSTEMS WITH SINGLE PHASE (230 volt) OUTDOOR UNITS (A)

IMPACT-L										
MCU(+) or DCUE	20		40		60		80		100	
	S	H	S	H	S	H	S	H	S	H
15	16 (10)	16								
30			16	16						
40			20 (16)	16 (20)	16 (20)	20 (16)				
60					20	20 (16)				
80							25 (20)	25 (20)		
90*							32	32	32	32
MHPUE or DHPUE	S	H	S	H	S	H	S	H	S	H
30			10	16						
50					16	20				
80*							25 (20)	32		
90*									32	32

**** Ducted unit not available in this size*** ***S= Standard*** ***H= Heaters***

Figures in brackets are for R22 systems, if different to R407C fuses.

FUSES FOR SYSTEMS WITH THREE PHASE (400 volt) OUTDOOR UNITS (A/Ph)

IMPACT-L								
MCU(+) or DCUE	40		60		80		100	
	S	H	S	H	S	H	S	H
30	10	10						
40	10	10	16 (10)	16				
60			10	16				
80					10	16		
90*					16	16	16	16
100*							16	16
MHPUL	S	H	S	H	S	H	S	H
30	10	16						
50			10	16				
80*					10	20		
90*							16	32

**** Ducted unit not available in this size*** ***S= Standard*** ***H= Heaters***

Figures in brackets are for R22 systems, where different to R407C fuses.

IMPACT-L WALL MOUNTED UNIT INSTALLATION

The IMPACT-L wall mounted unit may be matched with an outdoor condensing unit (550 series), a ducted condensing unit (542 series), or a heat pump outdoor unit (551 series).

The installer supplies:

* 4 off M6 (or equivalent strength) Rawlbolt shields, bolts and washers.
* Fully insulated refrigeration pipework.
* All mains wiring with suitable isolation; Interconnecting wires for indoor and outdoor units.
* Condensate drain (minimum 10mm bore for gravity drain, 8mm bore for condensate pump drain).
* Two spanners for securing the flare connectors.
* A cross-headed screwdriver for releasing the end cover fasteners.
* A 4 or 5mm Allen key for opening the outdoor/ducted unit valves (depending on valve type).
* Method for securing solid sheathed cables if these are used.

Unpacking

Carefully unfasten the banding and lift off the outer cardboard carton sleeve.

The following are supplied:

* IMPACT-L unit (in protective sleeve, held between two polystyrene end caps).
* A cardboard sleeve containing two pipe assemblies complete with insulation and two cable glands suitable for flexible, p.v.c. sheathed cable.
* A wall mounting bracket also held between the two polystyrene end caps.
* Envelope containing operating instructions to be left with the end user.
  Infrared controller, wall mounting bracket, screws and two 1.5V AAA batteries.

1. Remove and place to one side the cardboard sleeve containing the two pipe assemblies, (and remote control assembly on IMPACT-L models).
2. Lift the IMPACT-L unit from the inner cardboard sleeve complete with the two polystyrene end caps; (this will require 2 people for sizes 60 to 100).
3. Remove the wall mounting bracket and carefully remove the two polystyrene end caps and the protective sleeve from the IMPACT-L unit.
4. Remove both end covers by removing the self tapping screws, one on each end trim. By pulling the end covers sharply they can be removed from the backpanel and fascia.

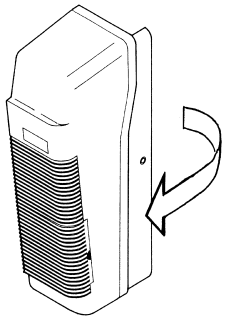

Chassis Mounting

NOTE: It is generally easier to fit kits prior to mounting the unit and connecting the pipework. It is essential to fit a heater kit at this stage if right hand side access will be limited to less than the unit width.

1. Ensure that the wall is flat and will support the operating weight of the unit, (see below)

2. Ensure that sufficient access is left around the unit for future kit fitting, servicing and maintenance (Fig. 1).

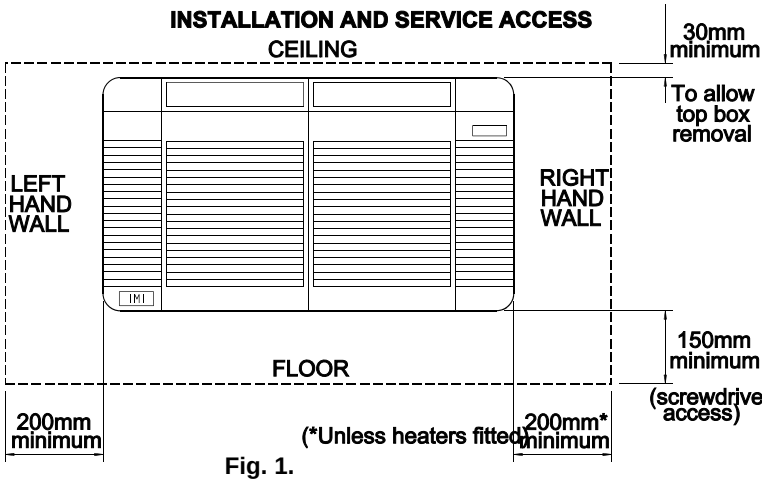

Fig. 1.

Model	Weight kg	Operating Weight kg
20L	14	15
40L	20	21
60L	24	25
80L	30	31
100L	34	35

Includes all kits and refrigerant

***Removal or replacement of heater elements requires a clearance at the right hand side equal to the length of the unit**

3. Mark out the two required top hole centres as shown in Fig. 2, (note that the top of the IMPACT unit will be approximately 100mm above the level of the hole centres). Drill to suit M6 Rawlbolt shields or equivalent strength fasteners. Secure the wall mounting bracket to the upper two holes ensuring that it is level.

4. Hang the unit on the two protrusions from the wall mounting bracket and, ensuring that the unit is level, mark out and drill the lower two holes and secure the unit to the wall.

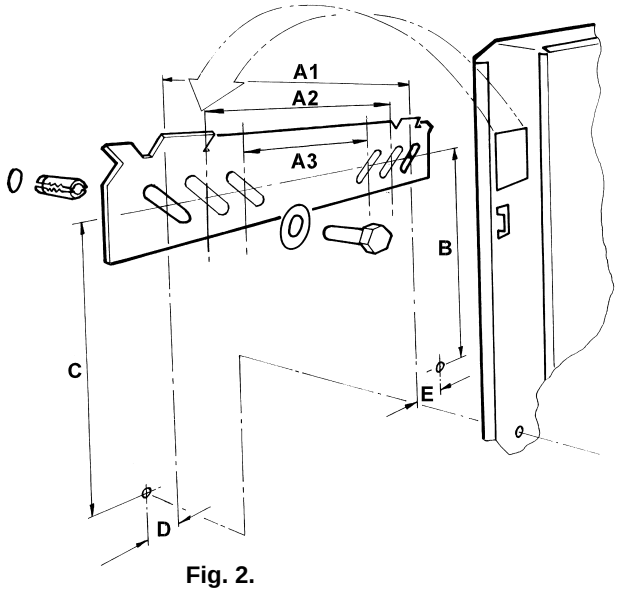

Fig. 2.

Model	20L	40L	60L	80L	100L
A1	445	745	1045	1345	1645
A2	395	695	995	1295	1595
A3	345	645	945	1245	1545
B	370	370	370	370	370
C	340	340	340	340	340
D	31	31	31	31	31
E	29	29	29	29	29

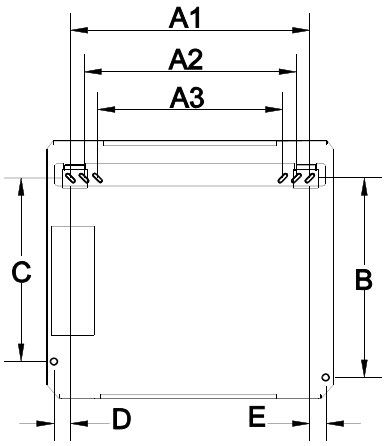

Condensate Removal

Condensate collects in a drip tray along the full length of the coil.
An outlet pipe is provided at the rear left hand end of the tray for connection to a pipe for gravity drain.
Slide the outlet pipe from the clip and exit the unit vertically through the hole in the backpanel or base tray.

The drain stub has a 14mm o.d. barb and is supplied with connector and a short length of 6.35mm i.d. hose
For connection to a 10-12mm i.d. flexible hose, remove the hose and connector supplied and connect directly to the stub.

Ensure that the drain pipe is kept below the rim of the drip tray along its entire length.
Once a gravity drain has been installed, check to ensure that the pipe is not kinked and that correct drainage occurs by slowly filling the drip tray with water.

A condensate pump kit (incorporating overflow protection) can be fitted within the unit to enable a lift of up to 5m.

Air Deflection

Air deflection is set by manually adjusting the vanes. The unit is supplied with front discharge but can be changed to top discharge as follows.

1. **Remove the filters.**
2. **Remove the end covers.**
3. **Using a screwdriver or thin bladed tool, release the three tabs at the bottom of the top box; these are directly below the centre and two end vertical vanes.**
4. **Lift the top box assembly from the unit.**
5. **By gently flexing the top box sides from the rear, transfer the deflector plate from the upper to the lower two fixing holes.**
6. **Rotate the top box assembly and refit to give top discharge.**

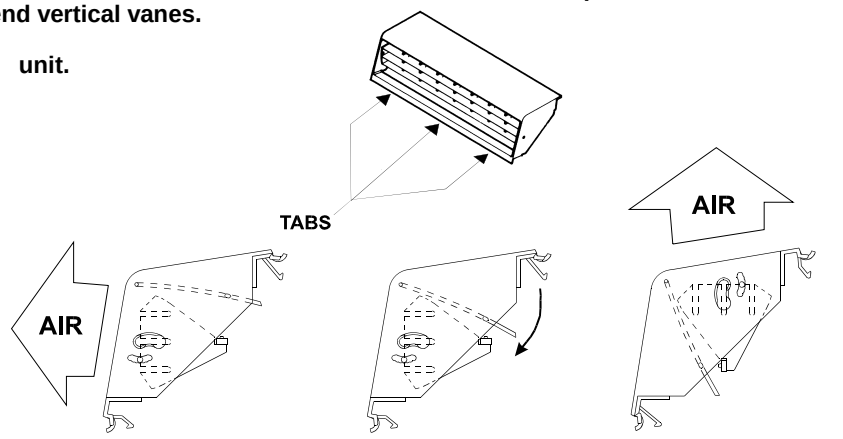

DEFLECTOR AS SUPPLIED FOR FRONT DISCHARGE

MOVE DEFLECTOR TO ALTERNATIVE POSITION

TURN TOP BOX THROUGH 180° AND SNAP IN TO SUIT TOP DISCHARGE

INSTALLATION of 550 Series CONDENSING UNITS and 551 Series HEAT PUMP OUTDOOR UNITS

MCU = standard condensing unit MCU+ = standard condensing unit + FSC + LP MHPUL = electronic heat pump outdoor unit

Some units are supplied with a number of loose restrictors which may be required, depending on the indoor unit it is matched with and whether the unit is to be run in NEMA conditions; refer to pages 18 and 19.

The installer will require:

2 open ended spanners for securing the flare fittings
A 4 or 5mm Allen Key for the valves (dependant on valve type).

Note: It is easier to fit kits prior to mounting the unit.

These units are designed to stand on a flat surface. If the unit is to be wall mounted the following kits are available.
(Marstair Ltd cannot accept liability for installers own mounting arrangements).

	MCU	MCU+	DCUE	MHPUL
R407C	✘	✔	✔	✔
R22 (EC)	✘	✘	✘	✔
R22 (NON-EC)	✔	✔	✔	✔
R290	✘	✘	✘	✘
?	✘	✘	✘	✘

Model	MCU(+) 15 - 80 / MHPUL 15 - 60	MCU(+) 90 - 100 / MHPUL 80 - 90
Mounting Bracket Kit	55021100	55021101

Whether floor or wall mounted, it is essential that the mounting surface is capable of supporting the unit weight. Leave space around the unit for air circulation and access for installation and maintenance.

MOUNTING: MCU(+) 15 - 100 and MHPUL 15 - 90

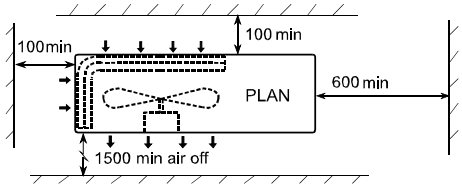

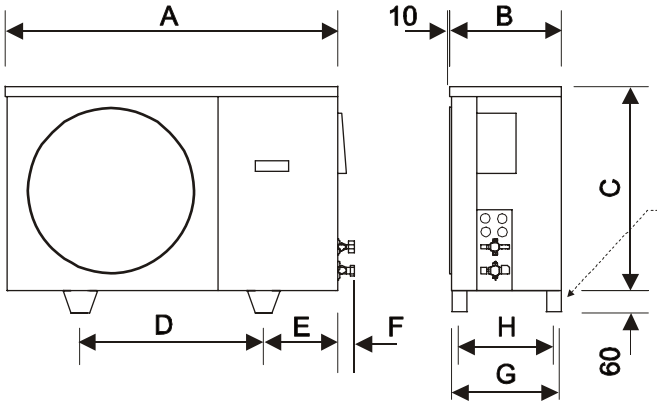

MOUNTING HOLES

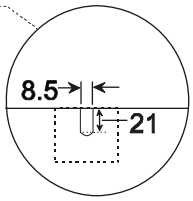

All dimensions are in millimetres.

MODEL	A	B	C	D	E	F	G	H	Weight (kg)	
									1 Ph	3 Ph
MCU(+) 15	900	300	560	525	185	60	295	275	45	--
MCU(+) 30	900	300	560	525	185	60	295	275	48	48
MCU(+) 40	900	300	560	525	185	60	295	275	53	53
MCU(+) 60	1000	300	660	570	213	60	295	275	65	63
MCU(+) 80	1000	300	660	570	213	60	295	275	66	64
MCU(+) 90	1000	350	760	495	250	70	345	325	76	73
MCU(+) 100	1000	350	760	495	250	70	345	325	--	81

MHPUL 15	900	300	560	525	185	60	295	275	47	--
MHPUL 30	900	300	560	525	185	60	295	275	50	50
MHPUL 60	1000	300	660	570	213	60	295	275	68	66
MHPUL 80	1000	350	760	495	250	70	345	325	75	72
MHPUL 90	1000	350	760	495	250	70	345	325	77	75

DUCTED CONDENSING UNITS and DUCTED HEAT PUMP UNITS

Electronic fan speed control, start delay timer, HP and LP switches, stabilizing brackets and a contactor are fitted as standard.

It is generally preferable to fit the following kits (if applicable), prior to mounting the unit. Kits available are:-

i) PTC (Positive Temperature Coefficient resistor). } for use on single phase systems,
ii) CSR (Capacitor Start Relay). } particularly on long pipe runs.
iii) Isolator.
iv) Overload (single phase units only; standard on three phase units).
v) Wall mounting kit.

Consideration should be given to the following, prior to mounting, but should not be fitted until the unit is in position:-

i) Flexible duct.
ii) Plenum (intake/discharge).
iii) Grille (intake/discharge).

MOUNTING

Units are supplied with a polystyrene packing piece supporting the blower assembly; this MUST be removed prior to commissioning.
Ducted units are designed to be hung on a wall (kit available), suspended from a ceiling (installer supplied fittings), or to stand on a flat surface. Whichever method is used, it is essential that the mounting surface is capable of supporting the unit's weight.

DIMENSIONS

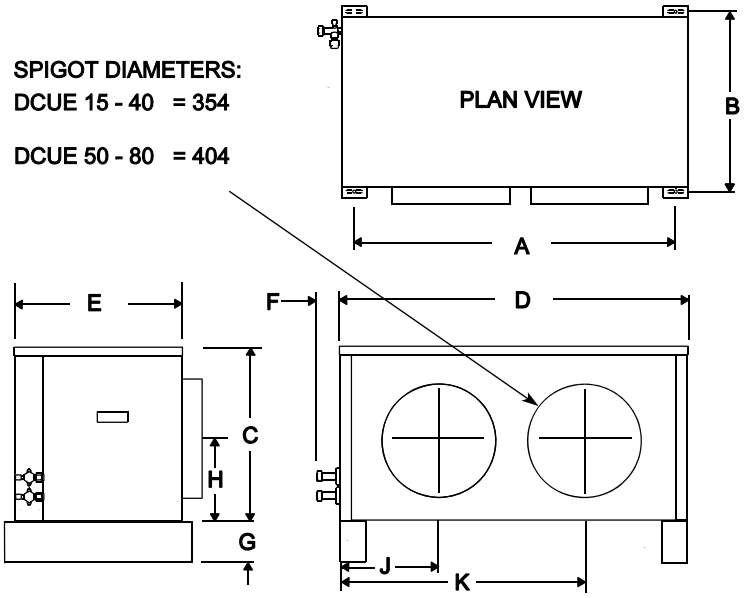

Model	A	B	C	D	E	F	G	H	J	K	Spigot Ø	Weight (kg)
DCUE 15	930	510	495	1004	490	65	65	210	317	717	354	69
DCUE 30	930	510	495	1004	490	65	65	210	317	717	354	70
DCUE 40	930	510	495	1004	490	65	65	210	317	717	354	72
DCUE 60	1100	510	560	1174	490	65	65	240	392	865	404	81
DCUE 80	1100	510	560	1174	490	65	65	240	392	865	404	84

FLOOR MOUNTING

Using the appropriate side of the packing carton as a template, (centres marked A), mark out and drill 4 holes to suit maximum M8 bolts (also see overleaf). Secure the unit to the floor. Discard the stabilizing brackets.

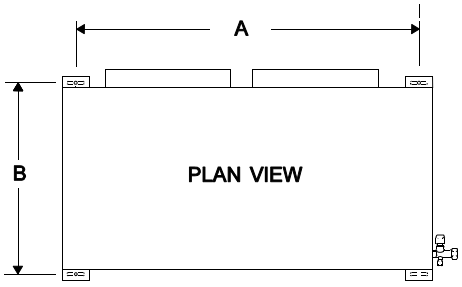

Dimensions in mm.

Model	A	B
15 to 40	930	510
50 to 80	1100	510

SUSPENSION MOUNTING

The installer must supply 4 x M8 threaded rods with 16 nuts and washers to suit.

IMPORTANT: **The stabilizing brackets provided MUST be used when suspending a unit.**
Fit the stabilizing brackets to the top corners of the backpanel and front face using the No. 10 screws
provided, (2 per bracket).
If these brackets are omitted the unit will be subject to unacceptable movement on compressor start
(Fig. 2).

Where long drops of M8 rod are used, it is advisable to incorporate flexible pipes in the suction and expansion lines.

Using the template printed on the side of the packing carton, (centres marked A) mark out theceilingand drill 4 holes to suit M8 screwed rod, (see Fig. 1).
Raise the unit to the required height and pass the screwed rods through the mounting holes in the units feet and stabilizing brackets.
Secure the unit with a nut and washer on either side of each stabilizing bracket and two nuts and washers underneath each foot mounting hole, (Fig. 2).

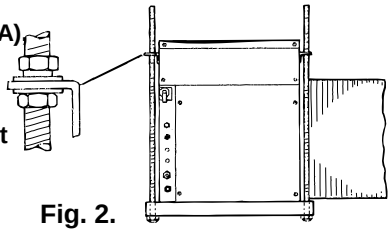

Fig. 2.

WALL MOUNTING

Wall mounting brackets are available as an optional kit (53200407).

DUCTWORK

Each unit is supplied with air inlet and discharge spigots:-
Models 15- 40: 354mm (14") Ø Models 50-80: 404mm (16") Ø.
These may be used for connecting installers ducting or with the optional duct, plenum and grille kits (refer to the kit instruction for installation). The front face of the units are fitted with M6 rivnuts to accept square ducting (shown below). Maximum flange width is 25mm and fixing holes should be central within them.

It is essential that inlet ducting is adequately insulated to prevent sweating,. An insulation thickness of at least 45mm is recommended.

Dimensions (mm)	Model	
	15 to 40	50 to 80
A	400	450
B	300	350
C	100	100

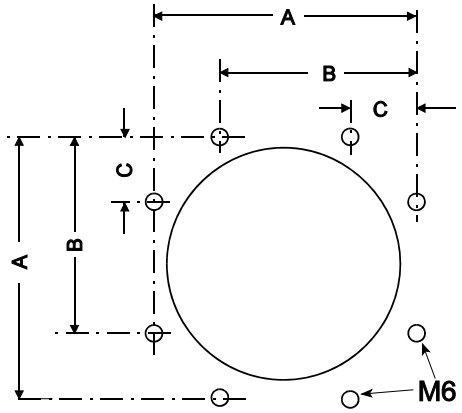

APPLICATION

1. **To maximise performance, pipe runs should be kept as short as possible, avoiding sharp bends. However, individual pipe runs to a maximum of 80m, , including 20m lift, are permissible provided good refrigeration practice is followed.**
   Published performance duties are based on 7.5m pipe runs. Correctly sized pipes for each installation, and fitting the correct expansion orifice (restrictor) will result in no significant loss of capacity on extended pipe runs.

   a) **Pipe sizes are based on:-**
      Minimum of 3.8 m/s (750 fpm) suction gas velocity for horizontal or downflow.
      Minimum of 7.6 m/s (1500 fpm) suction gas velocity for upflow.
      Maximum of 15.2 m/s (3000 fpm) suction gas.
   b) **Where vertical risers exceed 3m, oil traps must be formed in the pipe. This will help ensure that oil returns to the compressor. Typically fit an oil trap every 3m with a trap at the bottom of the riser.**

2. **Add 25 grams of polyolester (POE) oil for every 350 grams of charge added to systems with pipe runs exceeding 25m, up to a maximum of 300 grams; preferably by slowly pumping into the suction side with the unit running, after charging the system.**

3. **The maximum pipe lengths to be used for each pipe size and outdoor unit are shown in the table below. Use of these sizes and lengths is recommended in order to achieve optimum system performance.**

4. **In calculating equivalent lengths of pipe runs, the effect of bends and fittings must be taken into account. The table below covers the fittings most likely to be encountered in this type of installation. The equivalent lengths of all the fittings in a particular pipe run must be added together and the total added to the actual length of pipe in the run, in order to calculate the total equivalent length.**

FITTING LOSSES, in equivalent straight lengths of pipe (metres).

	Pipe Size (outside diameter in inches)					
Fitting	3/8	1/2	5/8	3/4	7/8	1-1/8
45° Bend	0.12	0.15	0.18	0.21	0.24	0.3
90° Bend R/d = 1	0.37	0.43	0.49	0.55	0.61	0.79
90° Bend R/d = 1.5	0.24	0.27	0.30	0.37	0.43	0.52
180° Bend C/d = 1.5	0.73	0.91	1.10	1.28	1.46	1.83
180° Bend C/d = 2.5	0.46	0.55	0.64	0.76	0.85	1.07
90° Elbow	0.67	0.85	1.04	1.25	1.46	1.89
R = Radius of bend		d = Diameter of tube			C = Centres of bend	

5. **Use the shortest possible route, avoiding sharp bends.**

6. **Fully insulate both the suction and expansion lines, including the expansion device, since both lines may sweat.**

RESTRICTORS

Outdoor units are supplied with cooling restrictors fitted in the expansion assembly; refer to the following tables for any restrictor changes. Those ticked do not require a change of restrictor.
Heat pumps are supplied with a heating resrtrictor in an expansion assembly. This must be fitted close to the indoor unit in the expansion line, arrows pointing in the direction of the outdoor unit.
Where appropriate, the alternative cooling or heating restrictor is supplied with either the indoor or the outdoor unit.

SYSTEM MATCH	PIPE CONNS		MAXIMUM PIPE RUNS (m)									COOLING RESTRICTOR			R407C (R22) CHARGE TO ADD (for 7.5m)	
			SUCTION						EXPANSION			MCU(+)		DCUE		
	SUC[N]	EXP[N]	3/8	1/2	5/8	3/4	7/8	$1^1/_8$	3/8	1/2	5/8	UK	NEMA	UK + NEMA	UK (g)	NEMA (g)
IMPACT 20L	3/8	3/8	7.5	30	50				50			033	035	032	210 (200)	240 (230)
MCU(+)15 DCU(+) 15	3/8	3/8														
IMPACT 40L	1/2	3/8		15	50	80			50	80		040	042	039	0 (0)	60 (65)
MCU(+)30 DCU(+) 30	1/2	3/8														
IMPACT 40L	1/2	3/8		10	36	80			7.5	80		042	044	041	140 (140)	245 (240)
MCU(+)40 DCU(+) 40	1/2	3/8														
IMPACT 60L	5/8	3/8		10	36	80			7.5	80		042	044	043	200 (200)	305 (300)
MCU(+)40 DCU(+) 40	1/2	3/8														
IMPACT 60L	5/8	3/8			14	36	80		7.5	50	80	051	053	050	0 (0)	670 (635)
MCU(+)60 DCU(+) 60	5/8	3/8														

SYSTEM MATCH	PIPE CONNS		MAXIMUM PIPE RUNS (m)								COOLING RESTRICTOR		HEATING RESTRICTOR (WITH ODU)	R407C (R22) CHARGE TO ADD (for 7.5m)	
			SUCTION					EXPAN-SION			MHPUL		MHPUL		
	SUC[N]	EXP[N]	3/8	1/2	5/8	3/4	7/8	3/8	1/2	5/8	UK	NEMA		UK (g)	NEMA (g)
IMPACT 20L	3/8	3/8	7.5	30	80			50			033	035	035	0 (0)	170 (180)
MHPUL 15	3/8	3/8													
IMPACT 40L	1/2	3/8		15	50	80		50	80		040	042	039	0 (0)	160 (170)
MHPUL 30	1/2	3/8													
IMPACT 60L	5/8	3/8		7.5	18	50	80	7.5	50	80	052	052	044	0 (0)	90 (100)
MHPUL 50	1/2	3/8													

PIPE CONNECTIONS

IMPACT-L UNITS

Pipework is terminated at the left hand side of the unit. Two pipe assemblies are supplied loose with flare nut connectors to enable pipe exit from either the top or bottom of the unit via knockouts. Rear pipe exit is possible with installer supplied pipework.
Always use two spanners to secure the flare connections to avoid distorting and damaging the pipework.
Pipe flare connections (in inches) are;

IMPACT Model	20L	40L	60L	80L	100L
Expansion Pipe	3/8	3/8	3/8	1/2	1/2
Suction Pipe	3/8	1/2	5/8	5/8	3/4

PIPEWORK CONNECTION and RESTRICTORS

1. **If top or bottom pipe exit is required, remove the appropriate knockout in the backpanel flanges.**

2. **Remove and retain the flare nuts from the coil, (the bonnets should be discarded).**

3. **Screw the angled ends of the pipe extensions to the male connectors on the coil, ensuring that the straight ends extend through the knockout.**

   For pipe exit through the rear of the unit, the installer must supply appropriately flared pipework.
   On heat pump systems the IMPACT unit needs to have an expansion assembly fitted: refer to the next section.

4. **Interconnecting pipework should be installed in accordance with good refrigeration practice.**

5. **Final connection is made to the male flare connectors, either on the pipe extensions (for top or bottom entry) or directly onto the coil (for rear entry).**

6. **Care should be taken to ensure that pipe flares are correctly formed and have undamaged seating surfaces. The use of a little oil on the flaring tool will help. DO NOT FORGET to fit the flare nut onto the pipe BEFORE flaring it.**

7. **Make the flare connections to IMPACT-L using a little refrigeration oil on the mating surfaces. Always use two spanners in opposing directions to avoid twisting the pipework and damaging the coil connections.**

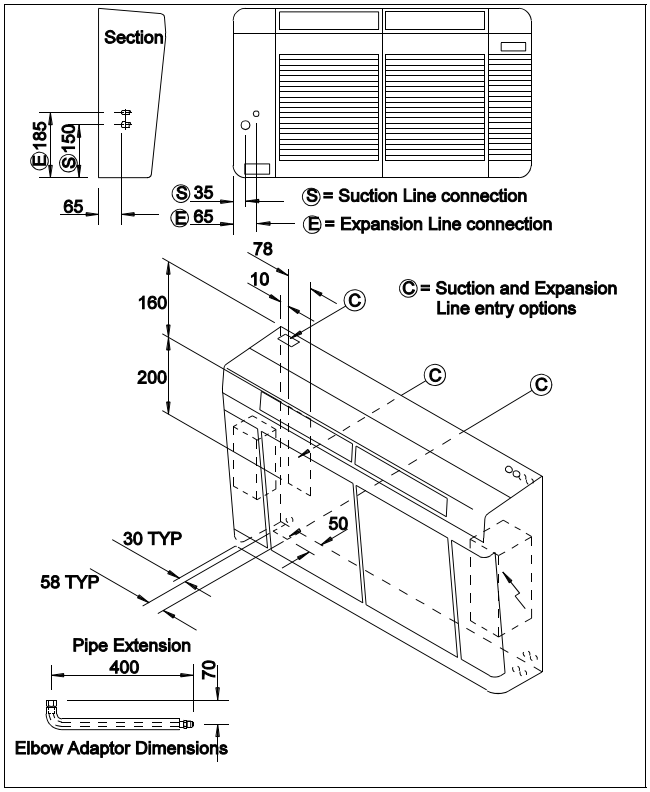

OUTDOOR/DUCTED UNITS

1. **Outdoor/ducted units are supplied with the following male flare connections (sizes in inches);**

Model Size	MCU(+) / DCUE						
	15	30	40	60	80	90	100
Expansio	3/8	3/8	3/8	3/8	1/2	1/2	1/2
Suction	3/8	1/2	1/2	5/8	5/8	5/8	3/4

MHPUL				
15	30	50	80	90
3/8	3/8	3/8	1/2	1/2
3/8	1/2	1/2	5/8	3/4

Ensure that both service valves on the outdoor unit are closed (IN, fully clockwise) before commencing installation.

Indoor units have a low pressure holding charge of nitrogen, which may be released into the atmosphere without damage to the environment. This should be done prior to making pipework connections.

2. **Outdoor units are delivered with restrictors: see page 18 for details of any changes necessary.**

3. **MHPUL 15 - 90 are supplied with 2 expansion assemblies. One is fitted to the outdoor unit and one is supplied loose to be fitted to the indoor unit. For any change of restrictor, reference must be made to the tables on pages 18 and 19.**

   a. **When installing a heat pump system, the second expansion assembly (140mm long) must be fitted to the expansion line as close to the indoor unit as possible. This provides throttling of the refrigerant and eliminates the need for separate check valves.**

   b. **Remove the flare nuts from the suction service valve and the expansion device as appropriate.**

   c. **Ensure that both the suction and expansion lines are fully insulated.**

   d. **Place the flare nuts over the incoming pipework and flare the pipe ends. The use of a little refrigeration oil on the flaring tool will help.**

   e. **Connect the pipework between the units. Do not leave pipe ends, valves etc. open to the atmosphere. Always use two spanners when tightening the flare nuts to avoid twisting the pipes. Use a small amount of refrigerant oil on the mating surfaces.**
   f. **Sight glasses and filter driers are not necessary, but if required should be fitted between the outdoor unit liquid shut off valve and the expansion device.**

4. **For units supplied with an alternative restrictor, replace the restrictor in the outdoor unit by:**

   a. **Completely removing the expansion assembly from the outdoor unit.**
   b. **Split the expansion assembly in the middle.**
   c. **Remove the existing restrictor.**
   d. **Drop the new restrictor vertically downwards into the field connector.**
   e. **Reassemble in the vertical plane (field connector lowest) and refit the expansion assembly to the outdoor unit.**

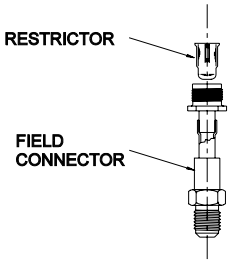

ELECTRICAL CONNECTIONS

CONFIGURATION

HEAT PUMPS need to have a resistor removed from the external electrics box.

AIR CONDITIONERS need to have the pcba jumpers reconfigured.

HEAT PUMPS

The printed circuit board is supplied configured for heat pump systems.

NO JUMPER RE-CONFIGURATION IS NECESSARY - JUMPER IS FITTED TO JMODE or CNMODE.

INDOOR BOARD
(AS SUPPLIED SUITABLE FOR HEAT PUMP SYSTEMS)

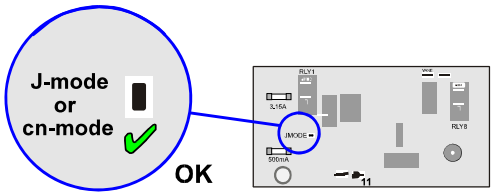

L INDOOR UNIT + MHPUL

THERE SHOULD NOT BE A RESISTOR CONNECTED TO THE TERMINALS MARKED 'S'

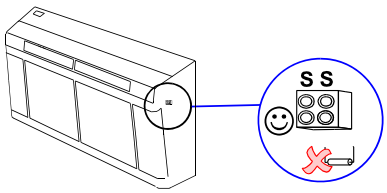

AIR CONDITIONERS

PRIOR TO CONNECTING A POWER SUPPLY

For use in an air conditioning system with or without an electric heater fitted, reconfigure the printed circuit board as follows:

1. **Locate programming plug JMODE or CNMODE in the middle of the printed circuit board.**
2. **Remove and discard programming plug JMODE or CNMODE.**

INDOOR BOARD
(RECONFIGURED FOR AIR CONDITIONING SYSTEMS)

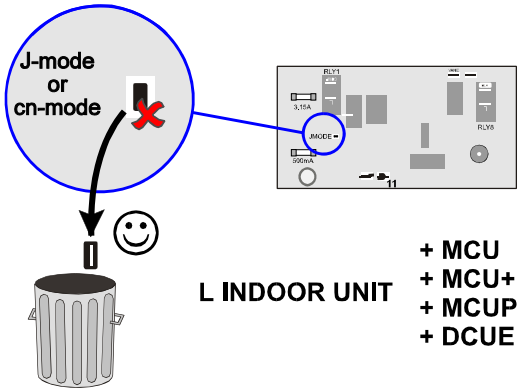

L INDOOR UNIT

+ MCU
+ MCU+
+ MCUP
+ DCUE

THE RESISTOR SHOULD REMAIN CONNECTED TO THE TERMINALS MARKED 'S'

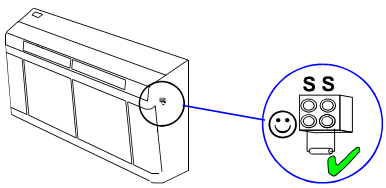

INCORRECT PROGRAMMING

If the unit has been powered whilst incorrectly programmed, turn the power OFF then ON again.

ALL SYSTEMS

Systems require a supply to the outdoor unit with connecting cables run to the indoor unit.
Refer to pages 27 to 31 for the interconnecting wiring diagrams.

Mains, control and interconnecting cables are supplied and fitted by the installer.
Installer wiring must be carried out in accordance with local and national codes.

Cables must be size compatible with the recommended fuse for a given system.

An isolator switch should be positioned within easy reach of the indoor unit.

The equipment MUST be earthed.

Cable clamps for use with stranded cables are supplied in units 15 - 90 and should be used to secure all incoming/outgoing cables. Installers must supply a method of securing any solid sheathed cables.

OUTDOOR UNIT WIRING

Cable entry for the outdoor unit electrics is through the cabinet to a terminal block.

MCU+, MHPUL and DCUE are supplied wired via the head pressure controller to give maximum control. Ensure that all connections are secure and that both units are earthed.

Electromechanical condensing units (MCU) are supplied wired for low fan speed, which is suitable for temperate climates. If continuous running is expected at ambient temperatures of 35°C or higher, change to high speed by interchanging the black and red wires, i.e. black to fused terminal, red to terminal 4 (single fan units) or terminals 4 and 8 (double fan units).

COMPRESSOR ROTATION

On 3 Phase units sizes 50 to 100 it is possible for the scroll compressor to run backwards. This becomes obvious on start up; the compressor will not develop a normal running pressure differential and the top will not become warm. It may be excessively noisy. If this happens, switch off the mains power and exchange any two of the phases supplying the unit. This will correct the rotation of the compressor.

DATA PLATES

Because of the ability to mix-match indoor and outdoor units, the data plate only gives information on outdoor units. To obtain the system details, input power and currents from indoor and outdoor units should be added together.
Data plates show basic units with electric heater kit loads shown separately.

FIRE LINK

In order to automatically switch off the fan in the event of a fire, it is necessary to fit an external switch (240V, 3A, closed to run, volt free contact) in series with the small black wire connected to the bottom terminal of the fuse.
This switch should be operated by the building's fire alarm or BMS system.

IMPACT-L REMOTE CONTROLLER

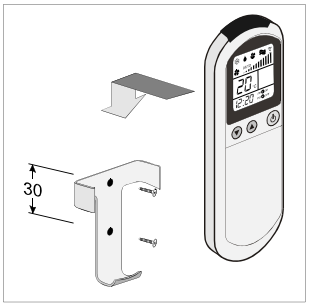

IMPACT-L indoor units are supplied with a remote controller, wall mounting bracket, two batteries, and screws: suitable wall plugs must be provided by the installer.
The controller operates remotely by infrared signals and the bracket may be used to park the controller for convenience.

Infrared operation

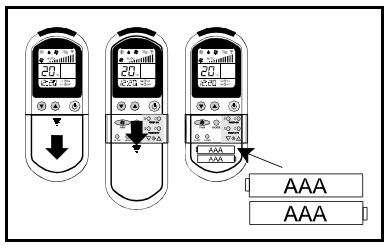

Slide down the cover at the front of the controller. Insert two AAA batteries, (checking polarity), then close the cover.
The controller is now ready for operation, as shown on page 32 .

Avoid installing the unit at high level with the infra red receiver (display) close to, and in direct line of sight of, fluorescent lamps as this may cause false operations. If this should occur, reset by turning the power off for a few seconds.

EVACUATING

1. **Connect a vacuum pump to the service ports on the outdoor unit valves and evacuate the interconnecting pipework and indoor unit to 1000 microns (1 Torr) or better and allow to be held for a minimum of 15 minutes.**

2. **If NO additional refrigerant charge is required:**
   Replace the caps on the service ports, (tighten to a torque of 25NM), and open the valves using a 4 or 5mm Allen key. On electronic units, REMOVE link JP6 identified by a white label, (otherwise the unit will always run at full speed).

ADDING REFRIGERANT

1. **If additional refrigerant charge is required:**
   After evacuating the indoor unit and interconnecting pipework, open the valves using a 4 or 5mm Allen key.

The high and low side pressures should equalise within a minute.

2. Additional charge for all systems, including heat pumps, should be introduced with the system in the AIR CONDITIONING MODE.

3. Additional charge should be introduced through the Schrader valve on the indoor unit or the service port on the suction service valve on the outdoor unit (see charging section overleaf to calculate the weight).

4. DCUE are supplied with link JP6 fitted on the outdoor unit pcba; this allows additional charging and overrides alarms during the charging process. With both units powered, the DCUE fan will run at high speed and IMPACT L indoor fan will run at maximum speed. When JP6 is linked, the infrared handset is inoperative.

MCU+ units are fitted with head pressure control; before charging, isolate the unit and transfer the blue wire on the head pressure control from terminal 4 to terminal 1. Do NOT forget to transfer it back once charging is complete.

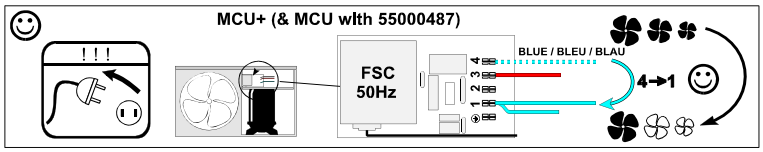

5. Ensure that the refrigerant being added is the same refrigerant that the system was originally charged with.

6. If a manual HP cutout is fitted, ensure that the reset button is depressed.

7. On DCUE and MHPUL models a random start delay of up to 1 minute occurs when mains is first applied. A 3 minute delay occurs between successive compressor operations on all systems incorporating DCUE and MHPUL units, or MCU(+) units fitted with a 3 minute timer kit.

8. Run the system for a few minutes to allow it to stabilize. Where possible, charge to a sweat line on the evaporator. Typical suction pressures on short lines at UK conditions, with high speed evaporator fan, low speed condenser fan (commissioning speed for DCUE), should be; electromechanical comfort systems approx. 4.4 bar (65 psig); electronic comfort systems approx. 3.8 bar (55 psig); heat pump systems approx. 4.0 bar (58 psig).

Care should be taken when the compressor is first started in the field to ensure that the system is not overcharged, in which case liquid return to the compressor could result.

9. On DCUE units, once refrigerant has been added, REMOVE link JP6, identified by a white label (otherwise the unit will always run at full speed).

10. On MCU+ units,return the blue wire from 4 to 1.

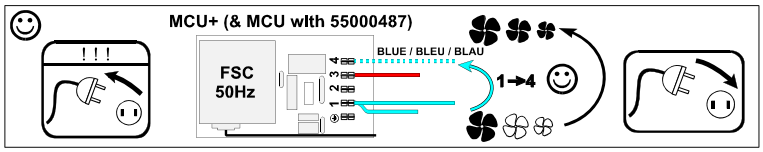

CHARGING

IMPACT-L WALL MOUNTED SYSTEMS - pipe runs below 7.5m.
Each outdoor unit is charged with R22 or R407C as shown on page 16. Additional refrigerant may be needed at any operating condition.
Where additional refrigerant is needed this is shown on P16. Additional oil is not required.

IMPACT-L WALL MOUNTED SYSTEMS - pipe runs over 7.5m.
For pipe runs over 7.5m, extra refrigerant and oil must be added to the system by the installation engineer as shown on page 16 PLUS additional refrigerant and oil for each metre over 7.5m, based on the following:

Expansion line size.	3/8	1/2	5/8
Additional refrigerant (g/m)	16	30	48
Additional oil	25g per 350g of additional refrigerant to a maximum of 300g		

WHEN INSTALLATION HAS BEEN COMPLETED - CHECK :-

1. All pipe work and joints for leakage.
2. All pipe work and fittings for insulation.
3. All bolts are secure and that the fan rotates freely.

IMPACT-L WIRING DIAGRAM

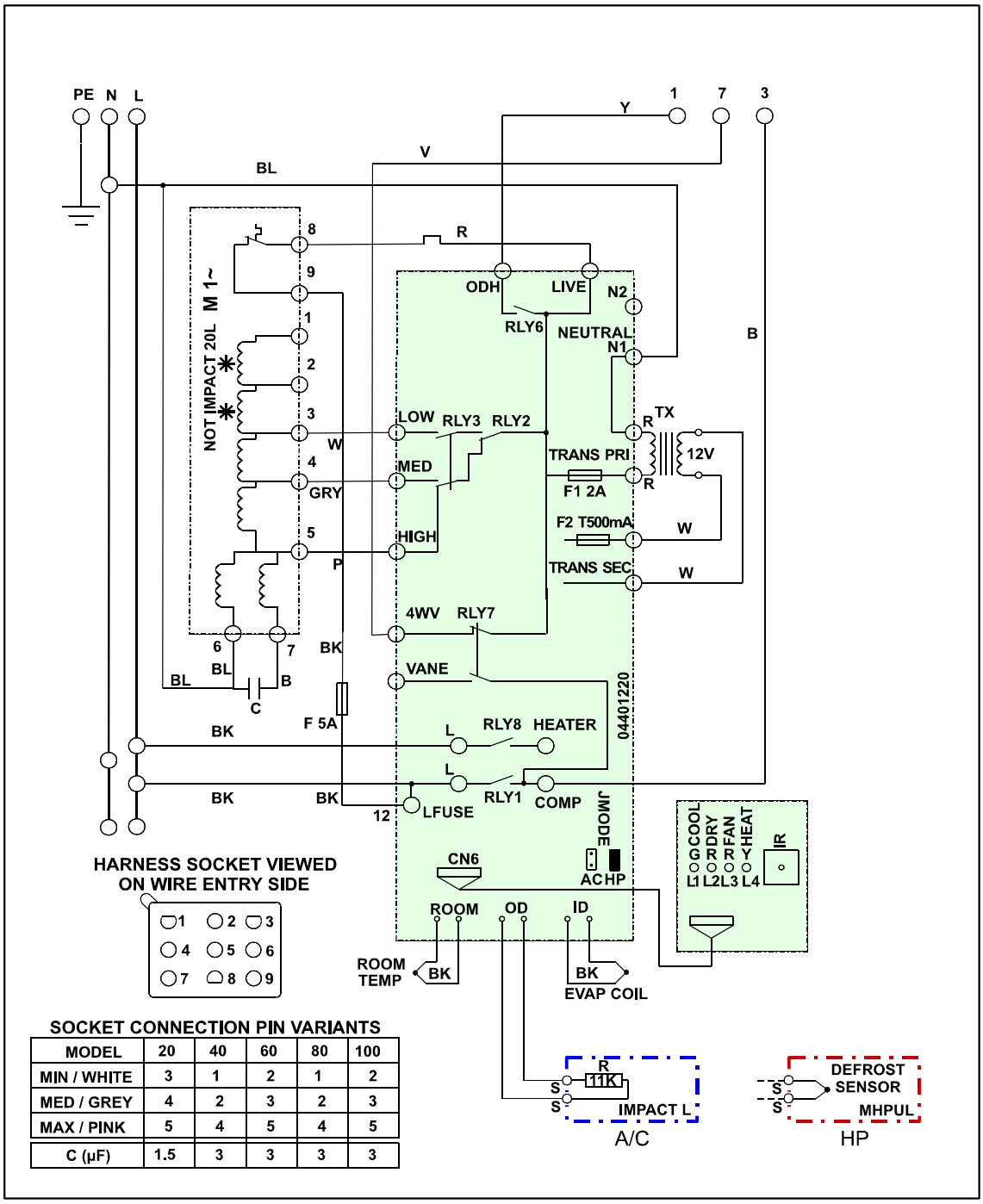

SOCKET CONNECTION PIN VARIANTS

MODEL	20	40	60	80	100
MIN / WHITE	3	1	2	1	2
MED / GREY	4	2	3	2	3
MAX / PINK	5	4	5	4	5
C (µF)	1.5	3	3	3	3

B	BROWN
R	RED
O	ORANGE
Y	YELLOW
G	GREEN
BL	BLUE
V	VIOLET
GRY	GREY
W	WHITE

H	HEAT/HEATER
TH	THERMISTOR SENSORS
RY	RELAY
F	FUSE
C	CAPACITOR
M1	MOTOR FAN
TX	TRANSFORMER
P	PINK
BK	BLACK

MCU WIRING DIAGRAMS

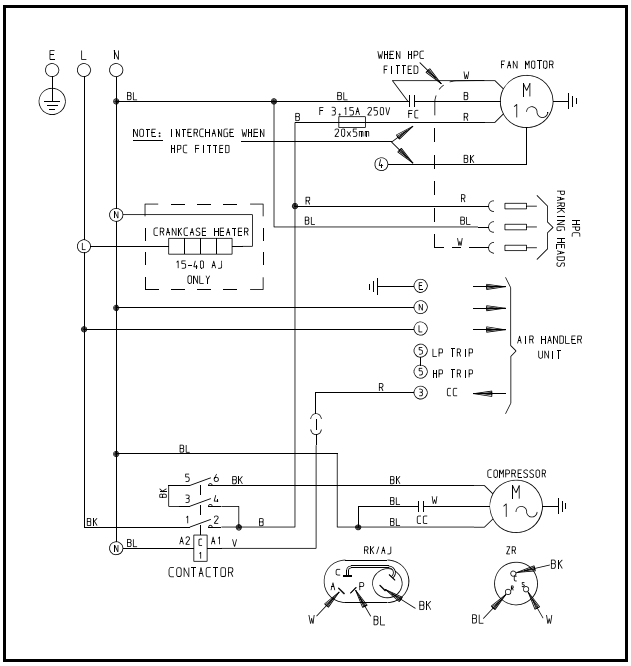

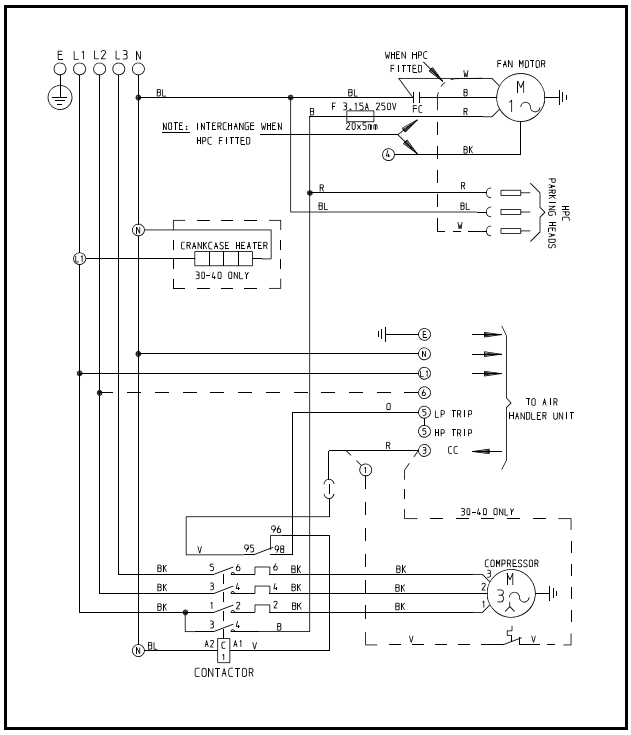

1 Phase MCU 15 to 90

3 Phase MCU 30 to 100

MCU(+) WIRING DIAGRAMS

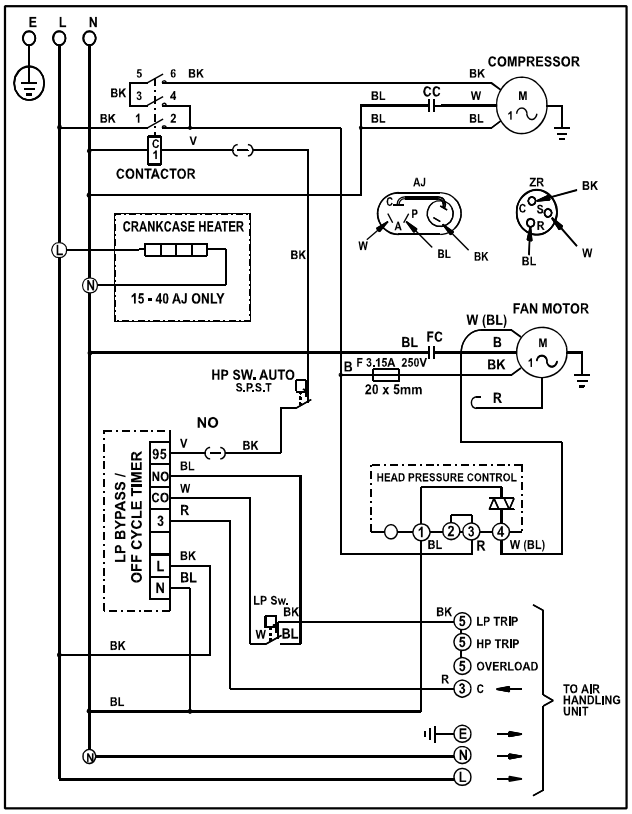

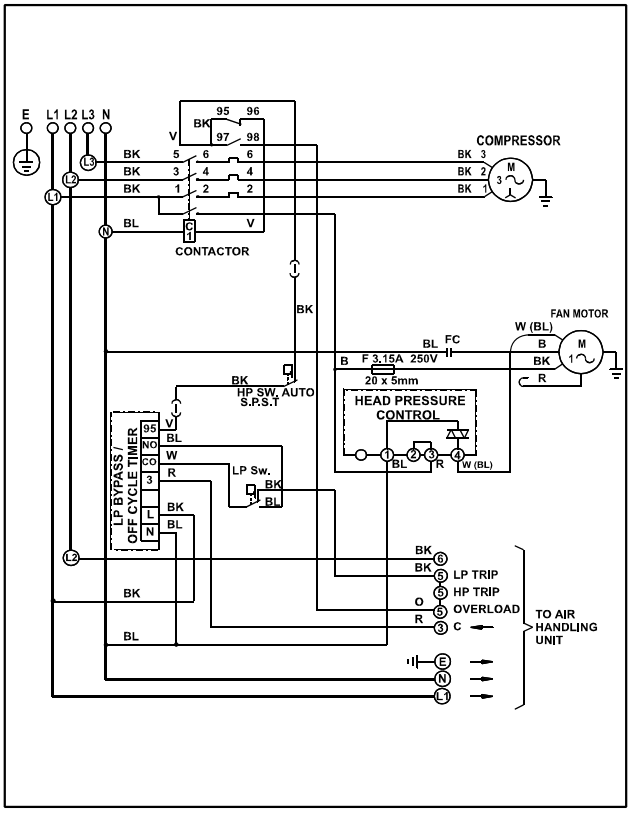

1 Phase MCU+ 15 to 90

3 Phase MCU+ 30 to 100

MHPUL WIRING DIAGRAMS

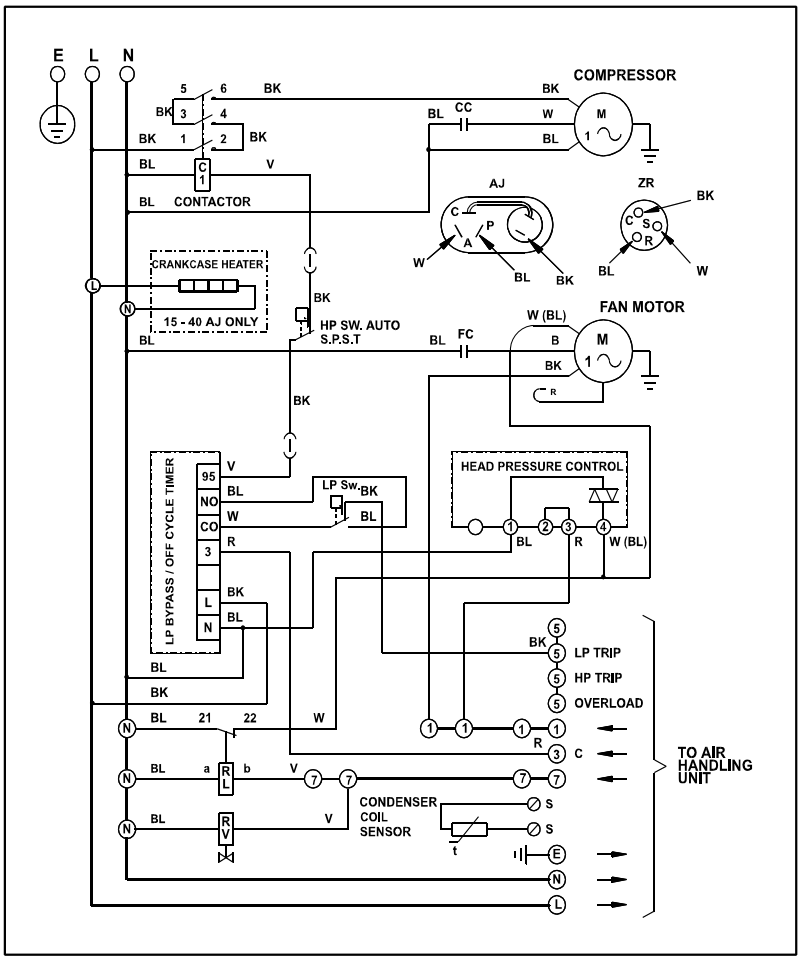

1 Phase MHPUL 15 to 60

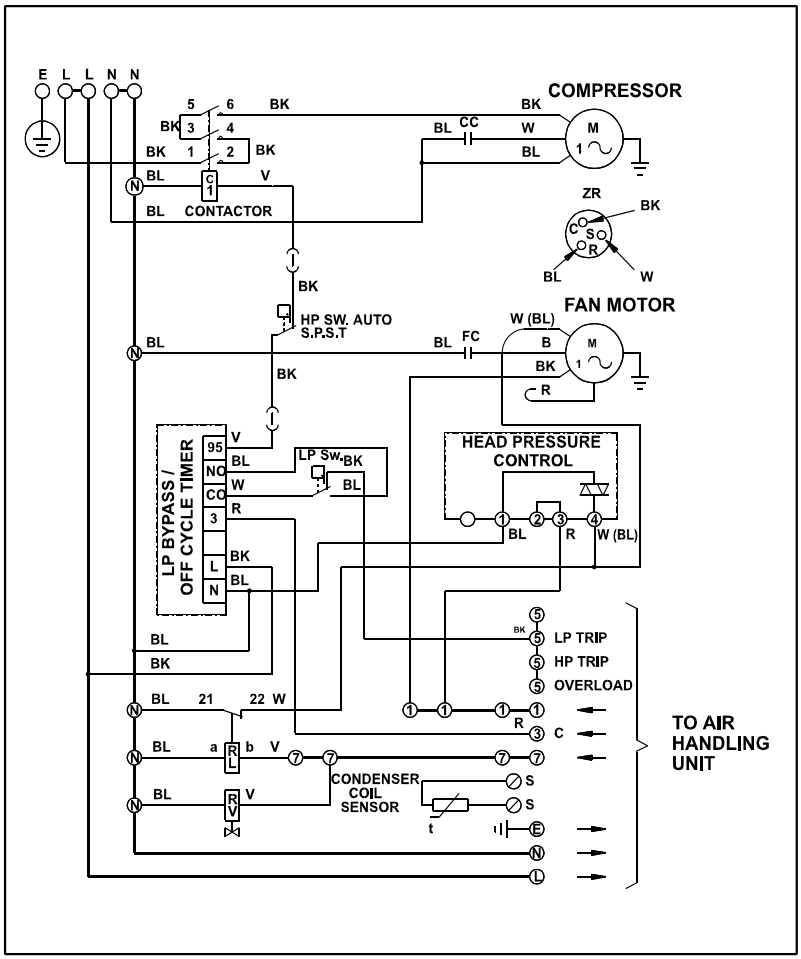

1 Phase MHPUL 80 - 90

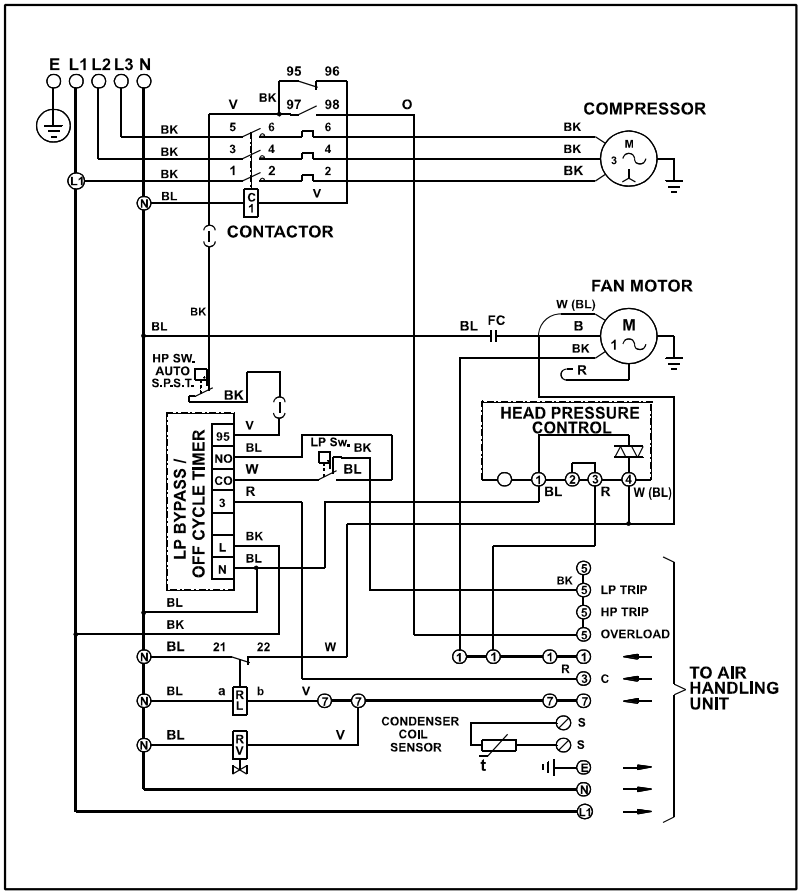

3 Phase MHPUL 30 to 90

ELECTRONIC DCUE WIRING DIAGRAMS

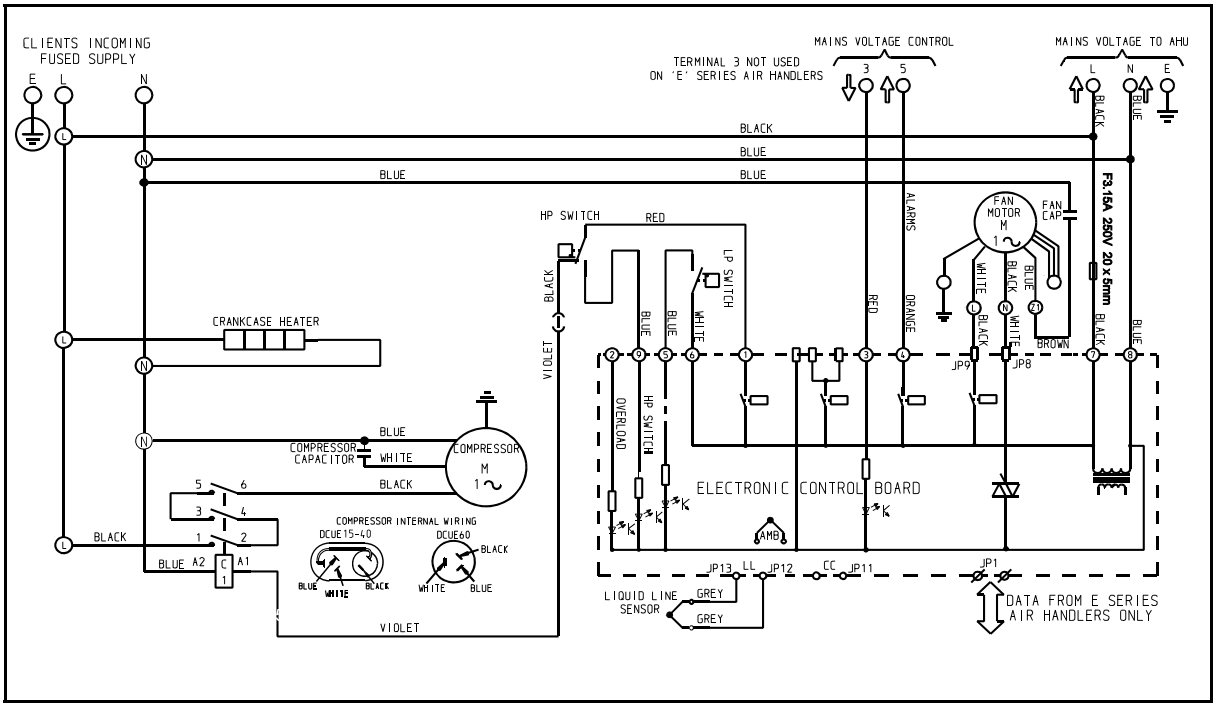

1 Phase DCUE 15 - 60

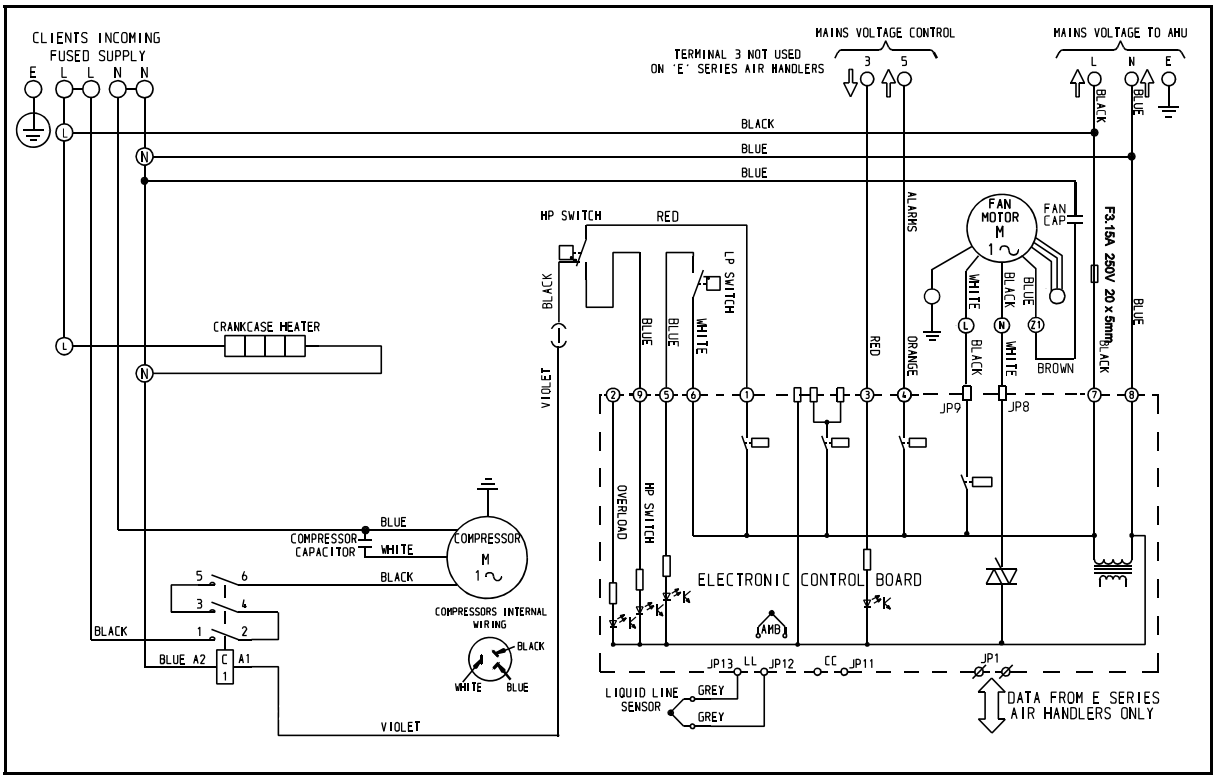

1 Phase DCUE 80

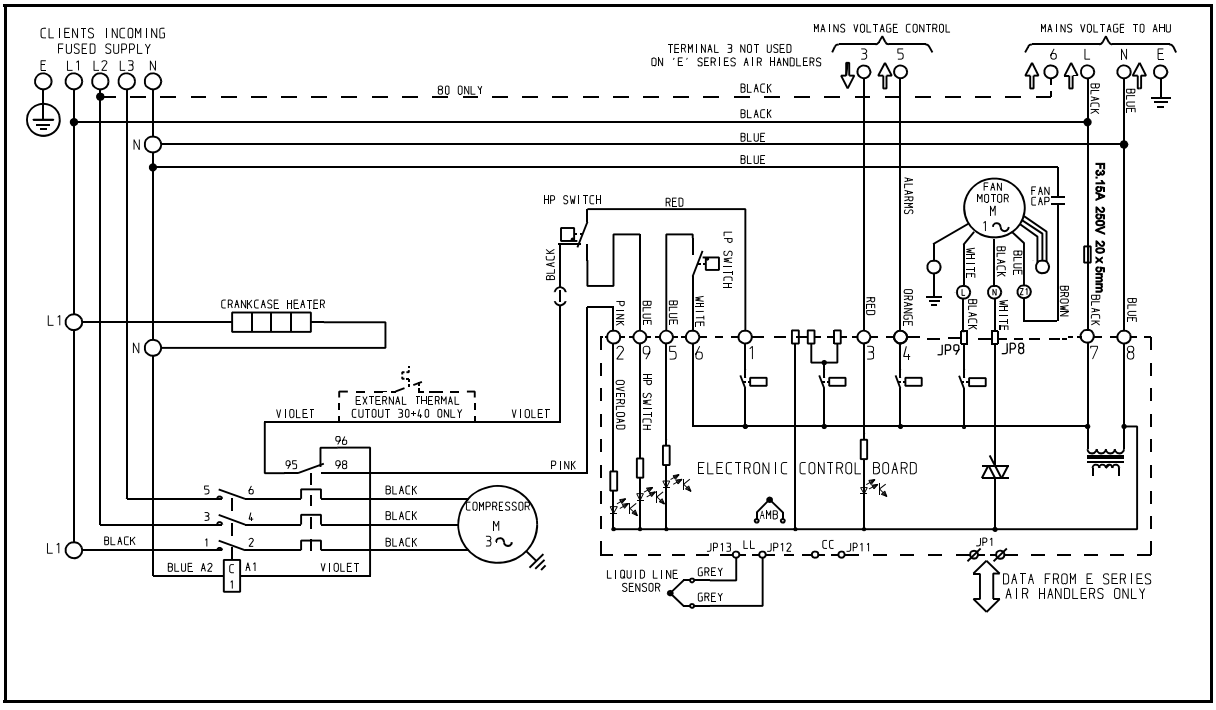

3 Phase DCUE 30 to 80

IMPACT L INTERCONNECTING WIRING DIAGRAMS

80L - 100L and 1 Phase MCU(+) 80 - 90

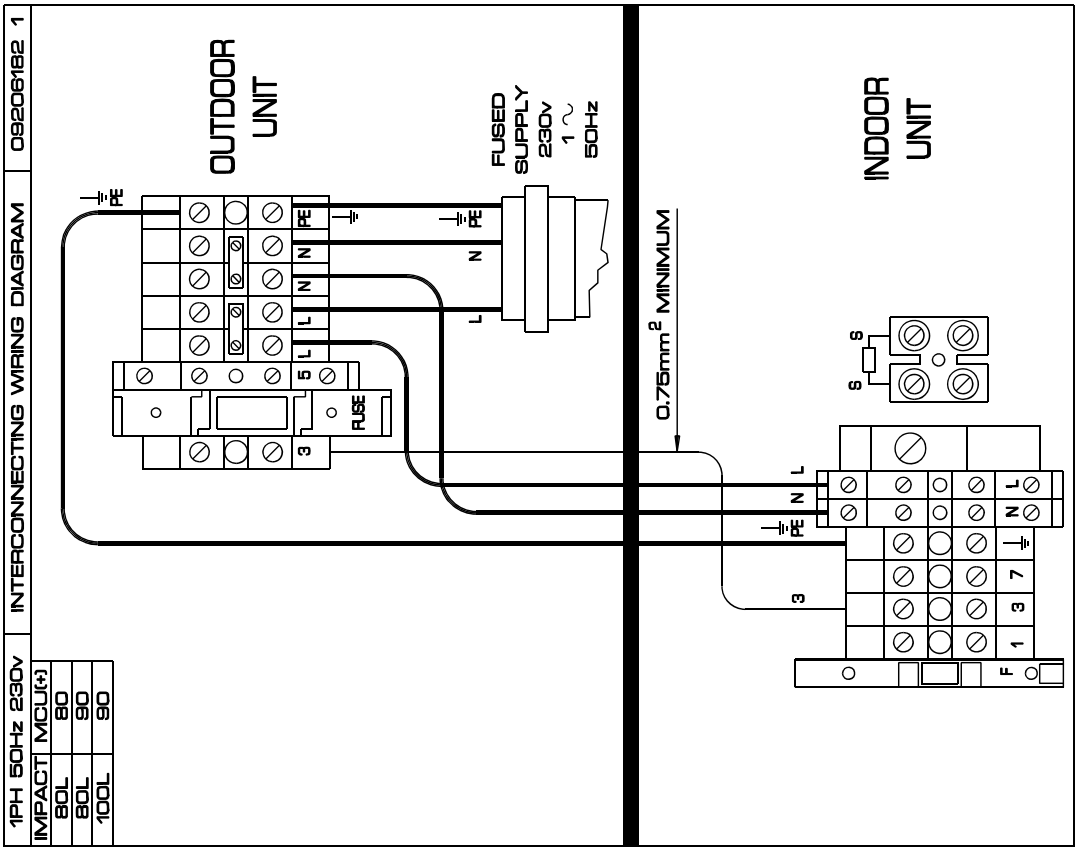

20L - 60L and 1 Phase MCU(+) 15 - 60

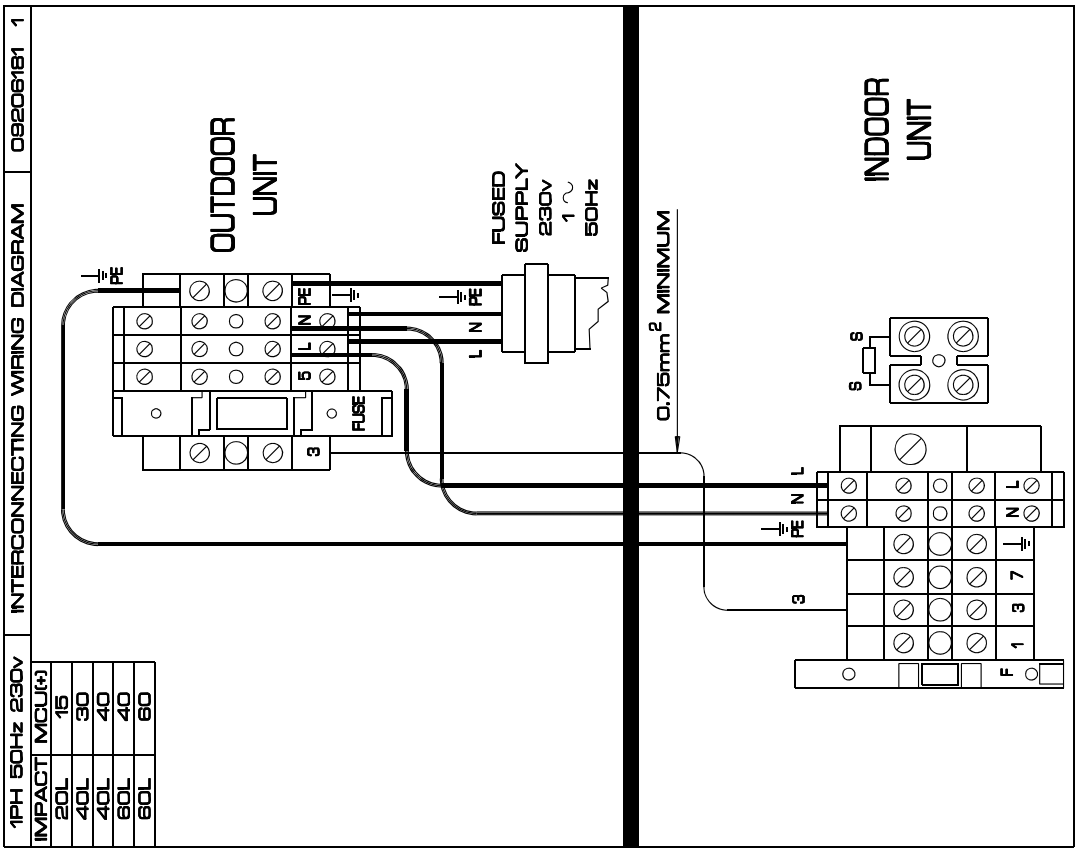

20L - 60L and 1 Phase MHPUL 15 - 50

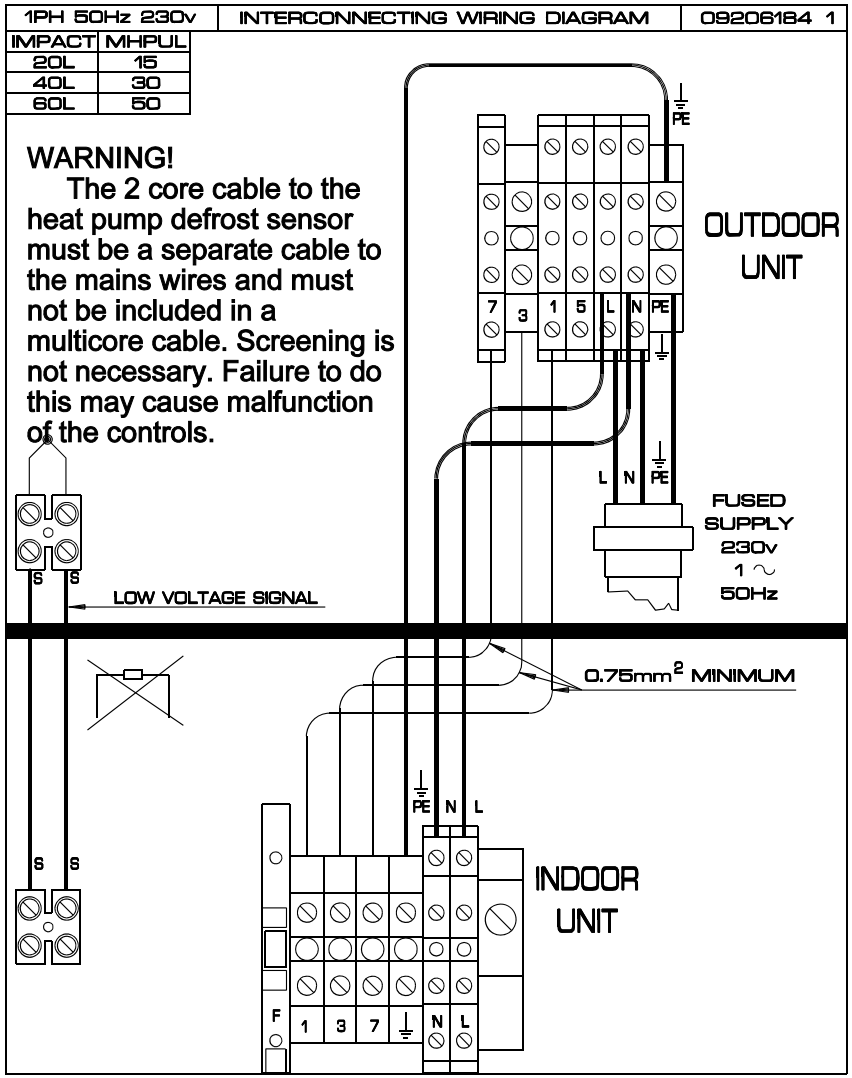

80L - 100L and 1 Phase MHPUL 80 - 90

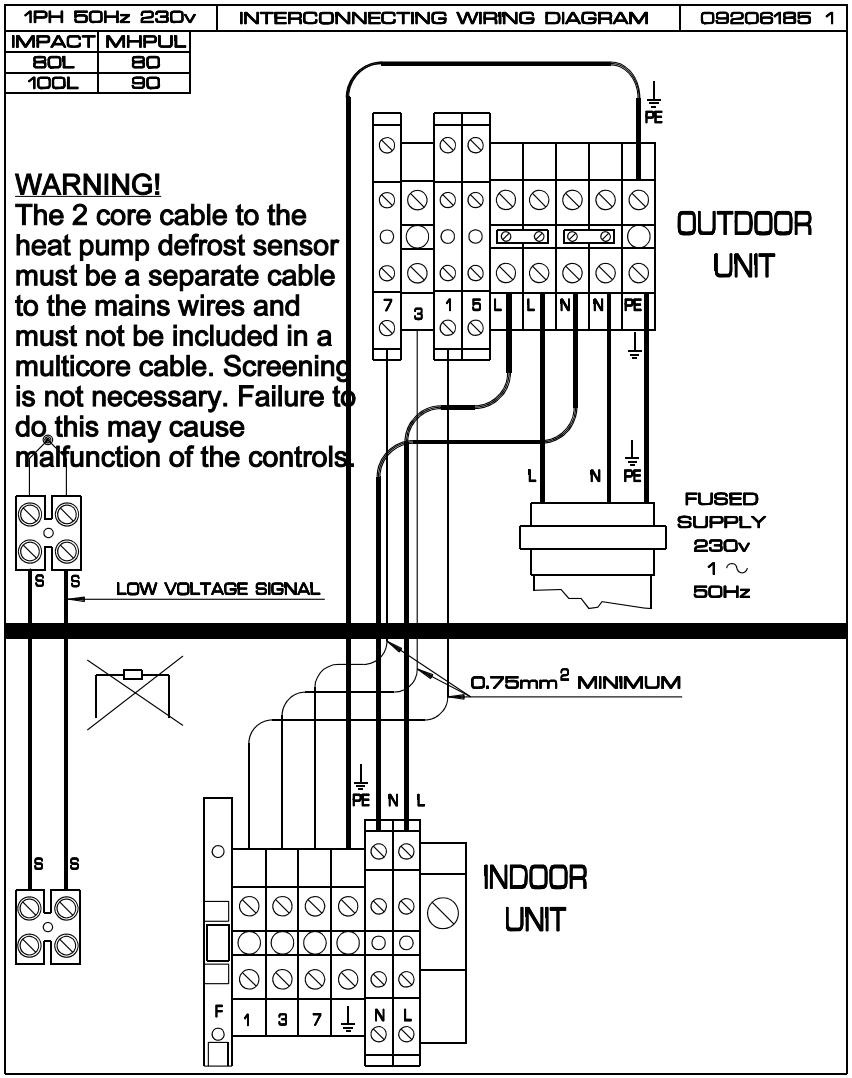

40L - 100L and 3 Phase MCU(+) 30 - 100

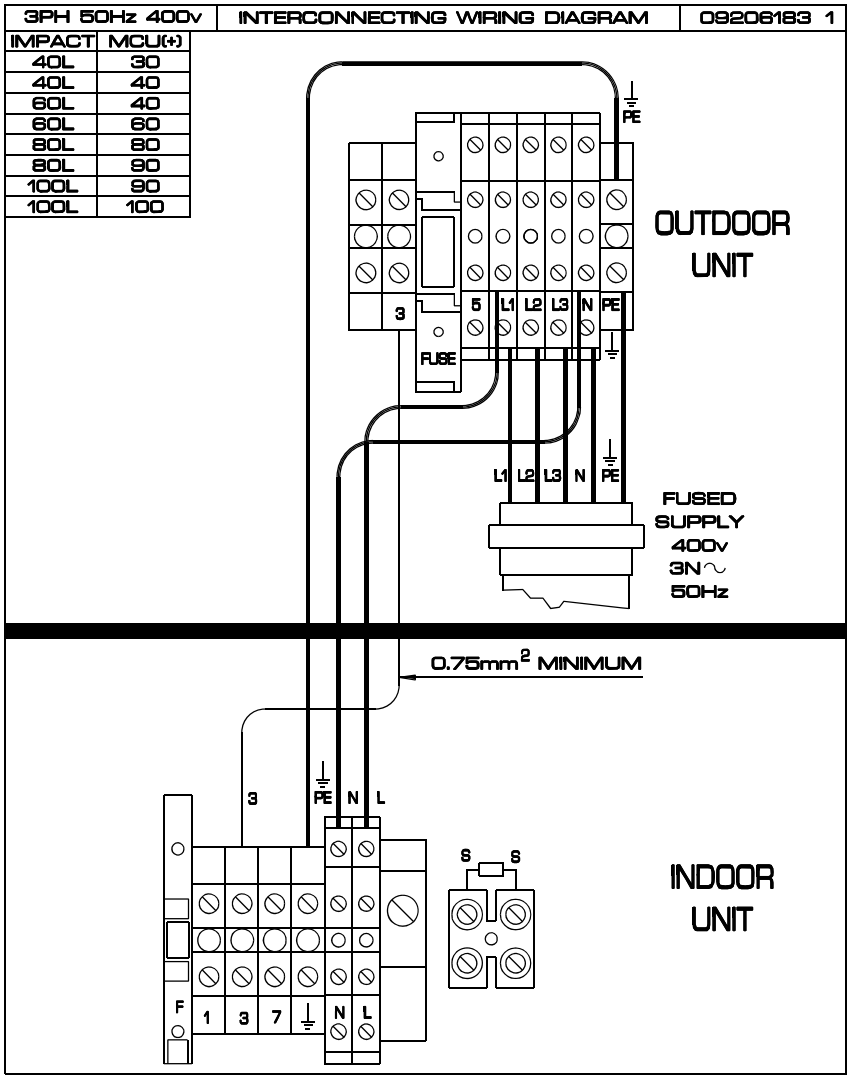

40L - 100L and 3 Phase MHPUL 30 - 90

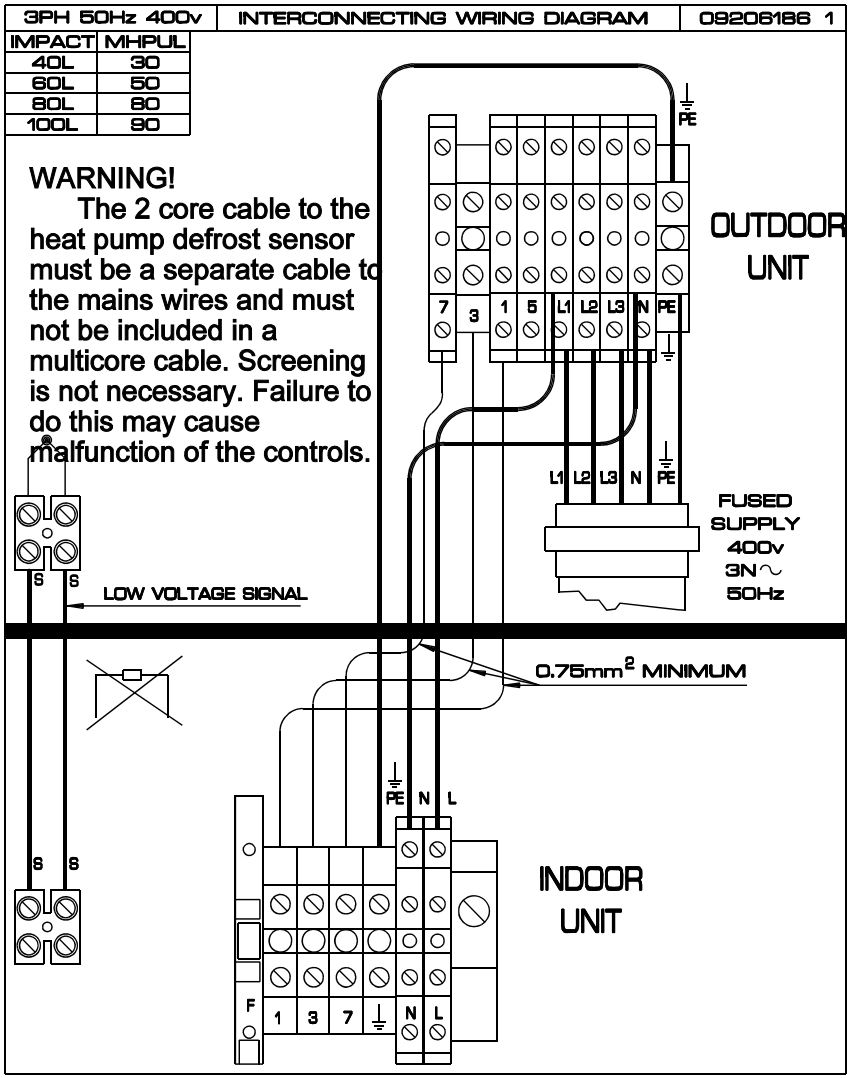

20L - 60L and 1 Phase DCUE 15 - 60

1PH 50Hz 230v		INTERCONNECTING WIRING DIAGRAM	09206109 2
IMPACT	DCUE		
20L	15		
40L	30		
40L	40		
60L	40		
60L	60		

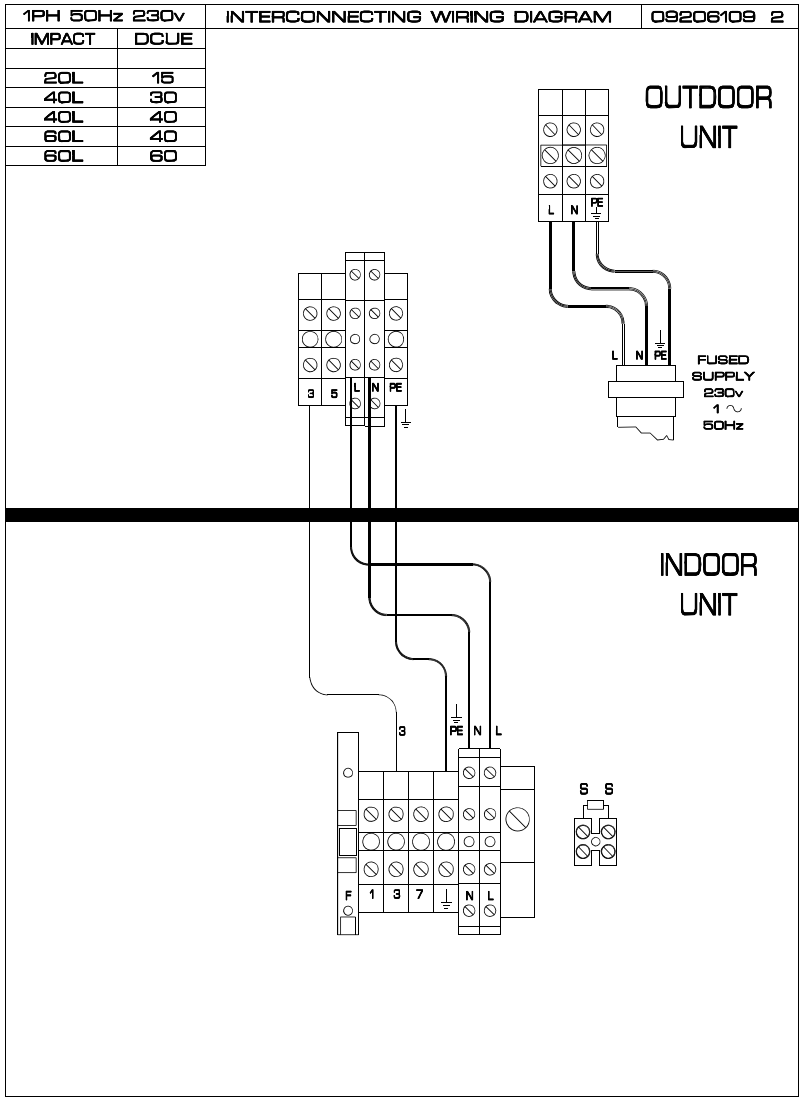

80L and 1 Phase DCUE 80

1PH 50Hz 230v		INTERCONNECTING WIRING DIAGRAM	09206110 2
IMPACT	DCUE		
80L	80		

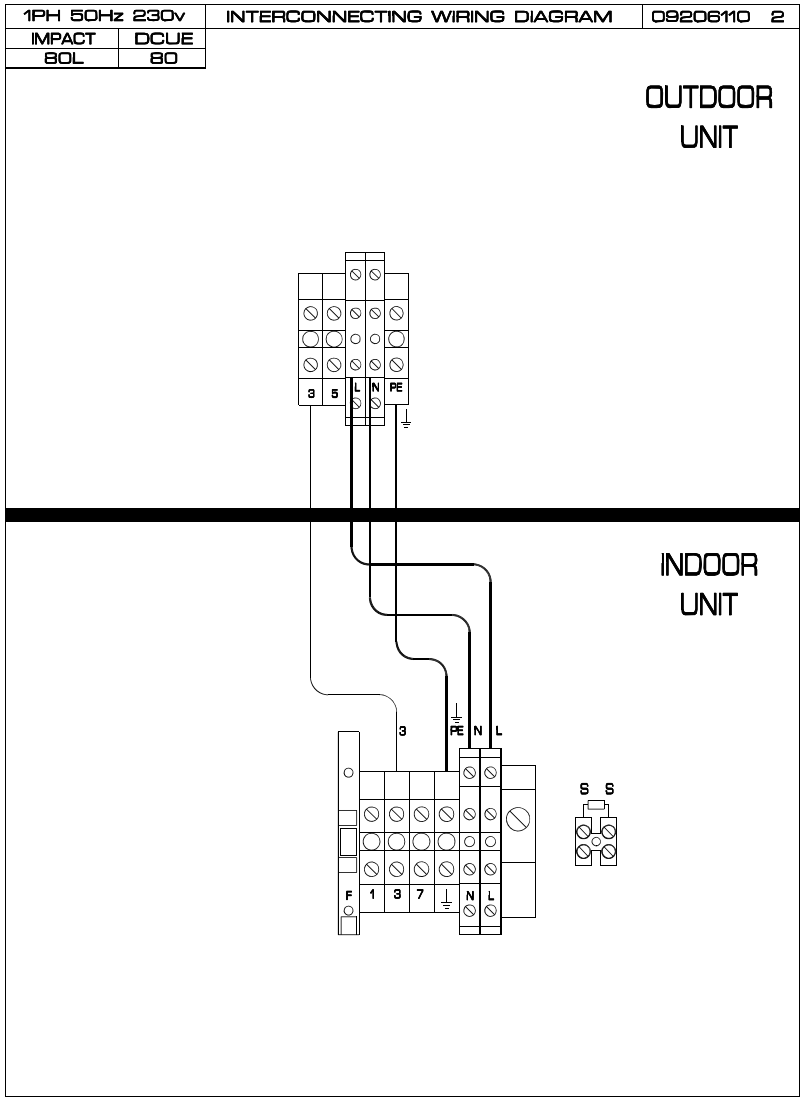

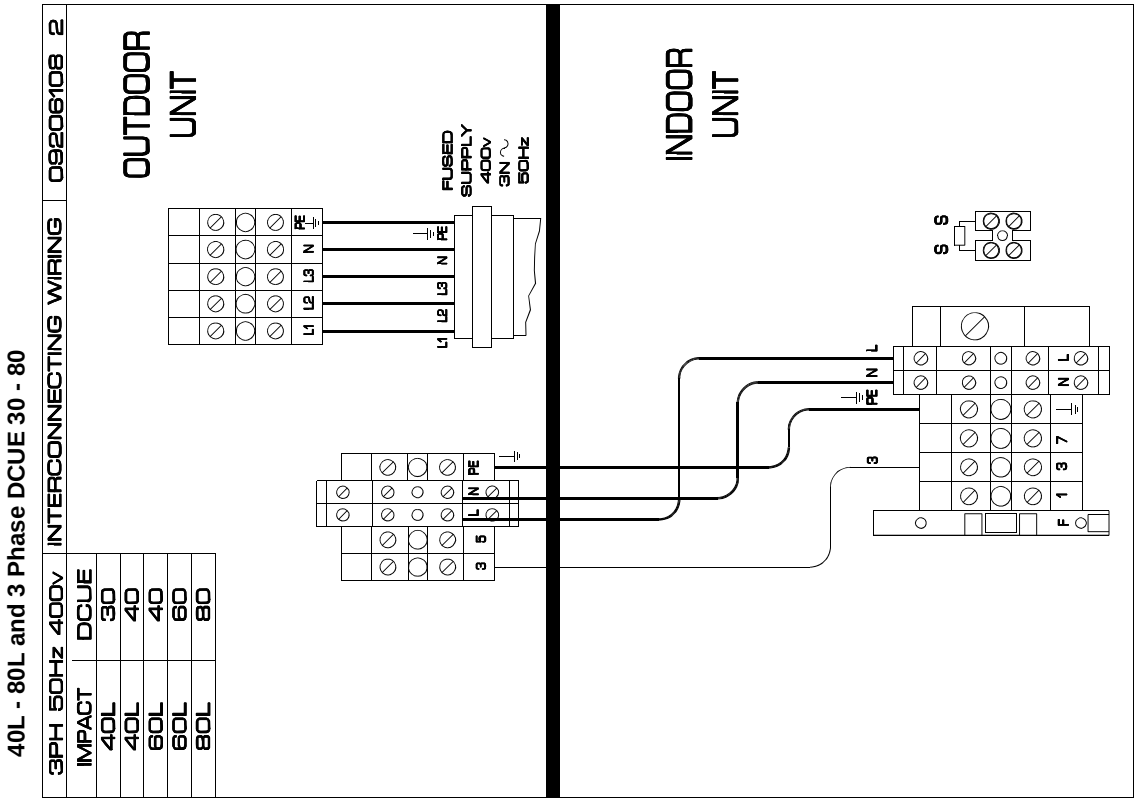

USER MAINTENANCE

Isolate at the mains supply before commencing any maintenance work.

THE UNIT SHOULD ALWAYS BE USED WITH A FILTER

In order to maintain efficiency it is important that the filters behind the air intake grilles are cleaned regularly. This will normally be every two or three weeks.

The filters should be removed from the bottom of the grille on high level units, or from the top of the grille on low level units.

Carefully slide each filter from behind the air intake grille. Wash the filter in tepid water and dry before use. Alternatively tap the filter gently to remove dust.

INFRARED REMOTE CONTROLLER - OPERATING INSTRUCTIONS

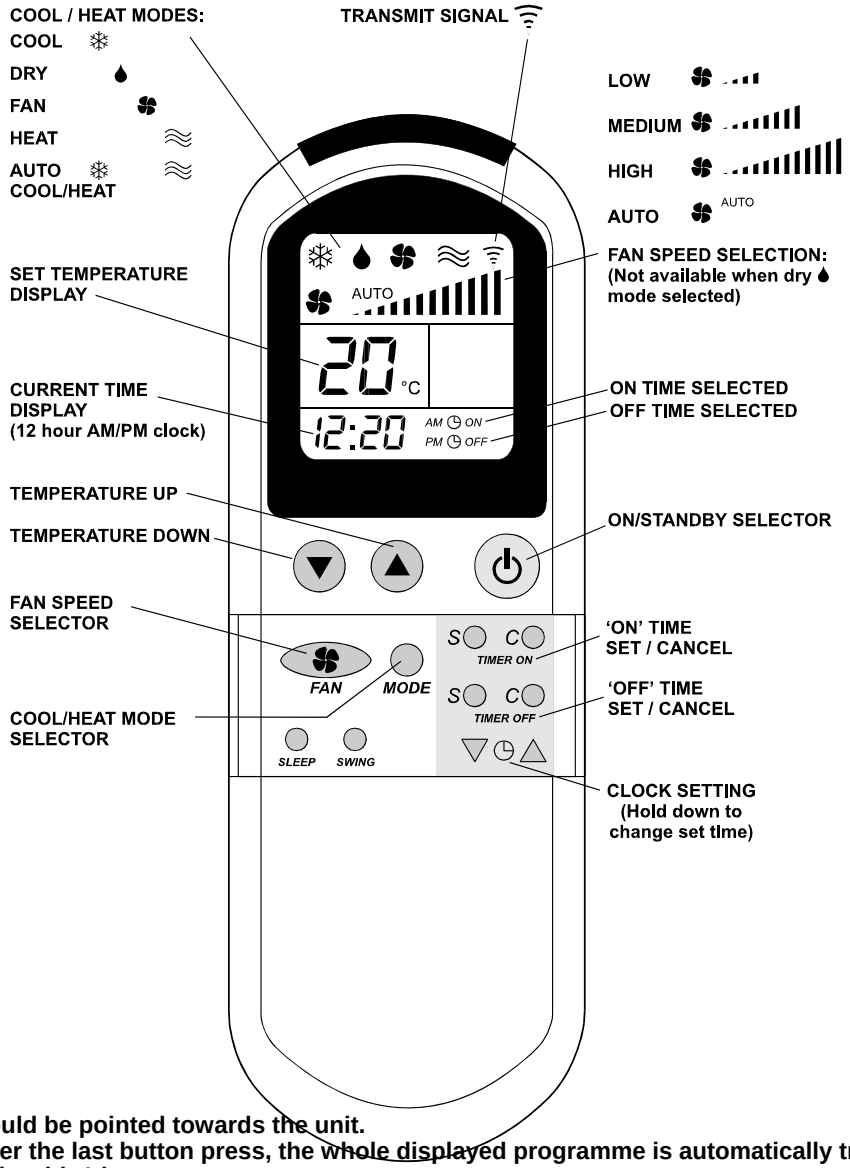

- **The handset should be pointed towards the unit.**
- **Two seconds after the last button press, the whole displayed programme is automatically transmitted.**
- **The unit responds with 1 beep.**
- **The transmit symbol A flashes whilst transmission is taking place.**
- **Displayed values may be re-sent at any time by pressing the pink button twice.**

1. Remote Controller Power Up

Remove the battery cover and insert two "AAA" size 1.5V batteries.
The initial display will show:



COOL

TEMPERATURE

TIME

HIGH FAN SPEED

'ON' TIMER SWITCHED OFF
'OFF' TIMER SWITCHED OFF

2. Setting Cool/Heat/Dry Modes

	COOL	**- Unit cools when required but cannot heat**
	DRY	**- Unit removes moisture by cycling cooling at low speed, humidity is reduced, but room temperature is not changed.**
	FAN ONLY	**- No cooling or heating - fan only**
	HEAT	**- If heating is available, unit heats when required but cannot cool.**
	AUTO COOL/HEAT	**- Unit cools or heats when required (if heating is available)**

3. Setting the Fan Speeds
Repeated pressing of the 'fan speed selection' button selects low, medium, high and auto speeds. In 'auto' selection, the fan runs at high speed when there is a difference of more than 2°C between the room temperature and the set (required) temperature, and low speed when less than 2°C.

4. Setting the Temperature

Press the 'up' or 'down' 'set temperature' button to alter the display between 16°C and 30°C.
By holding both buttons down, the display is changed between °C and °F.

5. **Setting the Clock (Current time)**
The 'up' and 'down' buttons must be held down for 3 seconds before they operate. Continue to hold the button down for rapid change.

6. **Programming the Timer**
The 24 hour timer can have one ON command or one OFF command or one ON/OFF cycle in a 24 hour period. Blank ON and OFF timer windows indicate that the timer is not programmed.

7. **Setting the ON Time**
Press the TIMER ON set 'S' button and step to the required ON time. Hold the button down for repeated stepping. Press the TIMER ON 'C' button to cancel the ON time.

8. **Setting the OFF Time**
Press the TIMER OFF 'S' button and step to the required OFF time. Hold the button down for repeated stepping. Press the TIMER OFF 'C' button to cancel the OFF time.

9. **Only ON Time Selected**
Unit will turn ON at the selected time and stay ON.

10. **Only OFF Time Selected**
Unit will turn OFF at the selected time and stay OFF.

11. **Use of the Pink H ON/STANDBY button when time programmes are selected**
At any time, pressing the Pink button will either start the unit or return it to standby mode. The unit will remain at this condition unless an appropriate ON or OFF time has been programmed.

12. **Cold Start**
In Cool or Heat mode, not Auto, after more than 3 days without power, or after 2 hours of non-operation, the set temperature is automatically raised (in heating mode) or lowered (in cooling mode) by 2°C until this temperature is reached, or the unit has run for 20 minutes, after which the unit operates with the displayed temperature. This decreases the time taken to reach set point.

14. **Off cycle delay**
To prevent operational problems, cooling restart is delayed for 3 minutes following power up, or from the time the unit was last cooling or heating, (if heat pump). Cooling or heating, (if heat pump) will operate for a minimum of 2 - 3 minutes.

15. **Displays**

Cool ❄ Green	Dry 💧 Red	Fan ✿ Red	Heat ☀ Amber	DIAGNOSTICS
OFF	OFF	OFF	OFF	No power, manual OFF, timed OFF, condensate high level, fault in condensate control
ON	OFF	ON	OFF	Cooling mode selected
ON	OFF	ON	BLINKS	AUTO - predominantly cooling
OFF	OFF	ON	ON	Heating mode selected
BLINKS	OFF	ON	ON	AUTO - predominantly heating
OFF	OFF	ON	OFF	Fan mode selected
OFF	ON	ON	OFF	Dry mode selected
OFF	OFF	OFF	BLINKS	Outdoor unit defrosting

Diagnostics

OFF	OFF	BLINKS x 4	OFF	Room sensor missing
OFF	OFF	BLINKS x 4	OFF	Indoor coil sensor missing
OFF	BLINKS	BLINKS x 4	OFF	Heat pump only, outdoor coil sensor missing
BLINKS	OFF	BLINKS x 1	OFF	Compressor overload

16. **Heat Pump Only**
If the outdoor coil temperature reaches 68°C, the compressor and outdoor fan will stop until the coil cools to 50°C.

17. **Commands Refused**
    a. **Attempts to set temperatures outside the display range are not transmitted.**
    b. **If heating commands are refused, the installer's programming is incorrect - call the engineer.**

18. **Battery Replacement**
It is advisable to replace the batteries as soon as the display begins to fade. Correct transmission cannot be guaranteed if the battery is failing.

19. **Power Cuts**
The unit permanently memorises its settings.

20. **User Maintenance**
Isolate the unit at the mains supply before commencing any maintenance work.
The unit should always be used with a filter. In order to maintain efficiency it is important that the filter behind the air intake grille is cleaned regularly:
- **Remove the filter(s) from behind the air intake grille.**
- **Wash the filter (in tepid water only) and shake dry before use.**
- **Alternatively tap the filter gently to remove dust or vacuum clean.**
- **To clean the unit use soap or a non-scratch liquid cleaner.**

-o-o-o-O-O-o-o-o-

ELECTRIC HEATER KITS FOR IMPACT UNITS

UNIT SIZE	20	40	60	80	100
ELECTRONIC KIT	53700415	53700416	53700417	53700418	53700419
TOTAL DUTY (kW at 240V 50Hz)	0.8	1.5	2.25	3.0	3.5

ITEM	QTY	DESCRIPTION
1	2	Heater Element
2	1	Heater Cutout Assembly
3	1	Cable Tie
4	1	Screw No. 8
5	1	Connector Block
6	1	Retaining Bracket
7	2	Screw No. 6
8	2	Insulation Boot

ISOLATE THE UNIT ELECTRICALLY PRIOR TO INSTALLATION OF THIS KIT

1. Remove both end covers of the unit by releasing the self tapping screws and pulling the end covers forward to release them from the front cover.

2. Loosen the two retaining screws on the electrics plate and swing the electrics plate outwards taking care not to damage the thermostat capillary on electromechanical models.

3. Remove the filter from the right hand end of the grille and measure the distance between the spring clip fitted to the coil and the coil end plate, (Fig. 1). If the spring clip is at the correct distance, i.e., 135mm for IMPACT 20 and 40, 205mm for IMPACT 60, 80 and 100, continue from instruction 4. If the distance is incorrect, move the spring clip as follows:

   a Remove the front/air return grille from the unit.
   b Note the two tubes of the coil which the spring clip is fitted to.
   c Remove the clip by squeezing both legs inwards.
   d Replace the spring clip between the same two tubes at a distance of 205mm from the coil end plate.

4. The heater elements are fitted from the right hand side of the unit. Feed the flying lead into one of the two holes in the middle of the coil block first, (Fig. 2), then push the heater element through the coil block until the rubber elbows seat firmly against the end plate notches, (Fig. 3). Secure the elements in position with the retaining bracket, (Fig. 4).

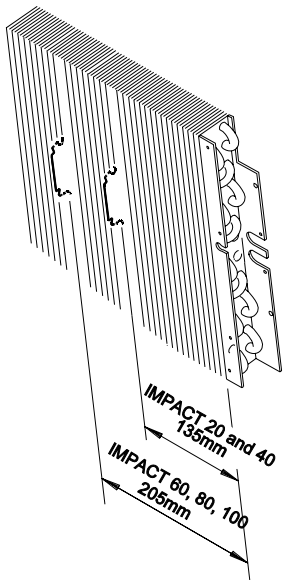

Fig. 1.

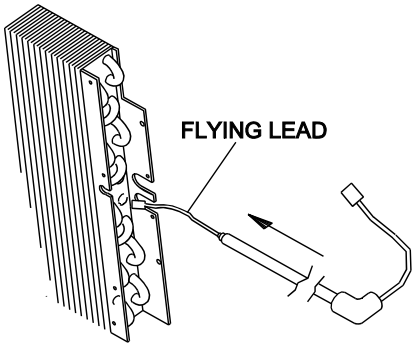

Fig. 2.

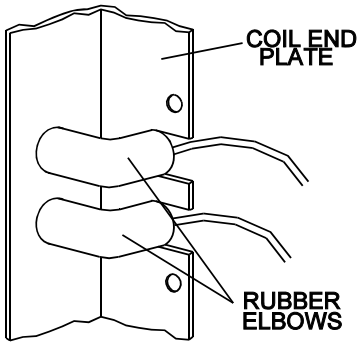

Fig. 3.

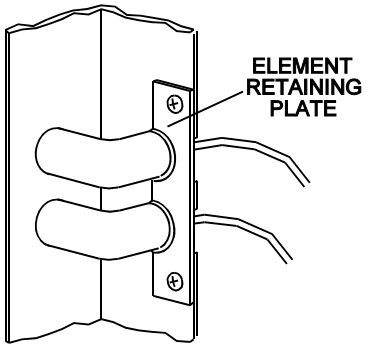

Fig. 4

5. Slide the heater cutout bracket under the spring clip fastened to the coil, (Fig. 5); ensure that the cutout is held firmly against the coil block, reposition the spring clip if necessary.

6. Pass the heater cutout wires through the slot in the heater cutout bracket and screw the bracket to the coil end plate using the No. 8 screw, (Fig. 6).

7. Push the rubber grommet fitted to the heater cutout wires into the slot in the coil end plate, (Fig. 6).

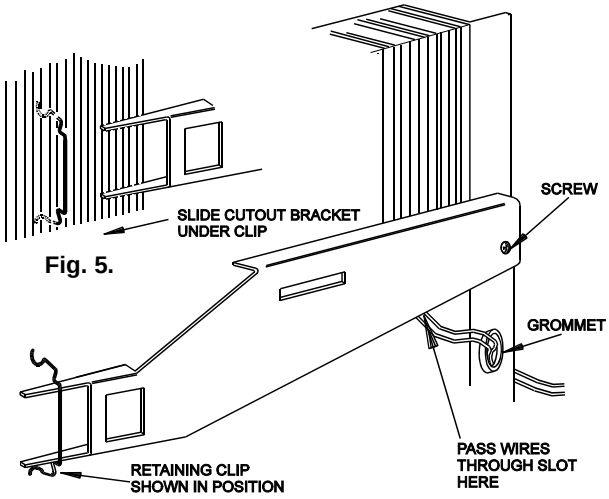

Fig. 5.

Fig. 6.

IMPACT 20 and 40 models have their heating elements connected in series.
IMPACT 60 to 100 models have their heating elements connected in parallel.
Failure to wire in this way could result in severe overheating.

8. On IMPACT 20 and 40 models: a pair of two way in-line connectors are supplied connected to a blue wire and one of the heater cutout wires. Insert the heater element flying leads into the two vacant terminals on the two way connectors Connect the blue wire into the neutral terminal block in the electrics box.

9. On IMPACT 60 to 100 models: a bridge connector is supplied connected to one of the heater cutout wires. Insert the heater element flying leads into any two of the three vacant terminals on the bridge connector.

10. A bridge connector is supplied at the left hand side of the unit attached to the back panel with an edge clip, (Fig. 7). Fit the insulation boots to the female in-line terminals on the heater element flying leads and insert into any two of the vacant bridge connector terminals. Discard the in-line terminal.

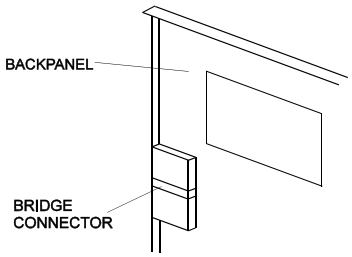

Fig. 7

WIRING

1. Connect the free wire from the heater cutout to the free terminal on the heater relay on the circuit board.

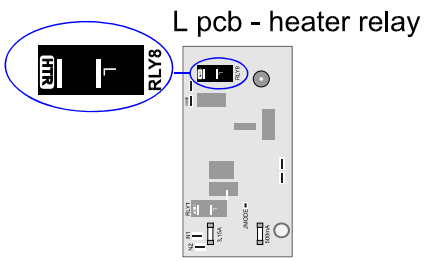

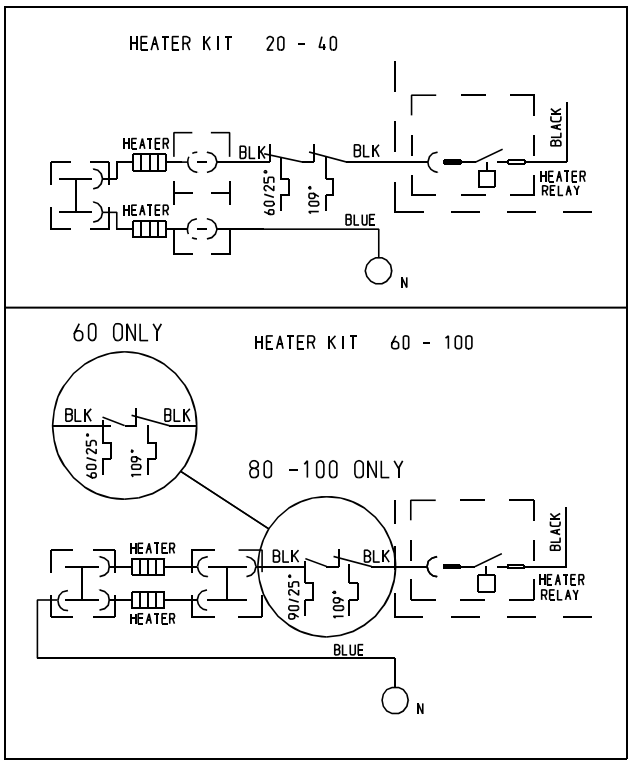

ELECTRONIC IMPACT HEATER KIT WIRING DIAGRAMS

-o-o-o-O-O-o-o-o-

CONDENSATE PUMP KIT 53700410

This kit is for use on all IMPACT units for the removal of condensate where gravity drain is not practicable or desirable.

The pump is capable of overcoming a resistance equivalent to 5 metres lift.

The sensor is arranged so that residual condensate in the sump is kept to a minimum.

The kit includes an overflow protection circuit which will prevent further cooling and condensate production if a high condensate level occurs.

ITEM	QTY	DESCRIPTION
1	PUMP ASSEMBLY CONSISTING OF:	
	1	Pump
	2	Grommet
	2	Hose
	1	Green/Yellow Cable
	1	Bracket
	1	Connector
	2	Cable Tie

ITEM	QTY	DESCRIPTION
2	CONTROL BOARD ASSEMBLY CONSISTING OF:	
	1	Control Board
	4	Mounting Foot
	1	Plastic Cover
3	4	Cable Tie
4	2	No. 6 Screw
5	1	Sensor Block (with filter)

It is preferable to fit this kit prior to installing the unit; the following instructions refer to bench fitting.

ISOLATE THE SYSTEM ELECTRICALLY PRIOR TO INSTALLATION OF THIS KIT

1. **Remove both end covers by removing the self tapping screws, one on each end trim. By pulling the end covers sharply they can be removed from the backpanel and fascia. It is not necessary to remove the front covers, or to open out the electrics plate..**

2. **Remove the drip plate from the left hand coil hanger bracket. If the plate has keyhole slots, there is no need to fully remove the retaining screws**

3. **The sensor block is supplied fitted to a transition bracket for use on units with a drip plate with screws fitted. Hook the bracket onto the two screws and tighten them.**

   Where the unit is fitted with a drip plate with notches, unclip the sensor block from the transition bracket (by depressing the left hand lever, swing away from the bracket and carefully unhook the right hand hook). Discard the transition bracket. Fit the sensor block to the drip plate by locating the fixed hook into the right hand notch, depress the lever and locate the moving hook into the left hand notch. Refit the drip plate.

4. **Secure the pump assembly to the left hand coil hanger bracket using the two No. 6 screws; use one of the screws to secure the earth (green/yellow) cable ring terminal between the pump bracket and the hanger bracket, (Fig. 1).**

5. **Remove the parking terminal from the top of the hanger bracket, remove the cables and discard the parking terminal.**

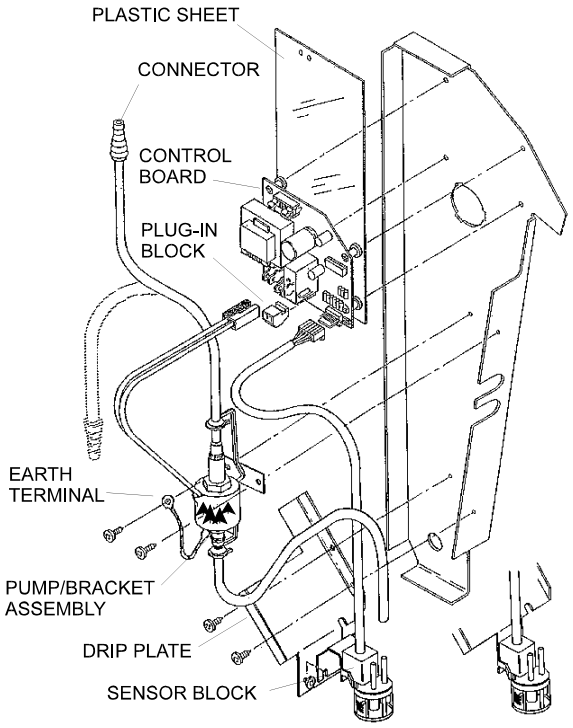

Fig. 1.

6. **Push the control board into the four holes, (Fig. 1), ensuring that the plastic sheet is free to fold over the front of the board.**

7. **Push the pump inlet hose fully onto one of the sensor block top spouts; avoid kinking**

8. **The pump top hose is supplied fitted with a connector suitable for connection to 8mm bore plastic hose. If 1/4" diameter copper is to be used, the connector should be discarded and the hose pushed directly onto the copper, for a minimum of 20mm, and be secured with a cable tie. If the condensate is to exit the unit at the back or the bottom, ensure that the pump hose does not kink.**

NOTE: If the drain outlet is below the level of the unit, syphoning may occur, creating noise on pumping. To ensure quiet running, fit an air break no further than 200mm below the level of the base of the unit, e.g., by pumping into a larger diameter pipe than that from the pump.

9. **Make the following electrical connections to/from the control board.**
   - **a. Black cable (from parking terminal) to terminal L.**
   - **b. Blue cable (from parking terminal) to terminal N.**

c. Two pump cables to terminal P/N and P/L, (these are non-polarised).
d. The sensor block flying lead plug to the six pin connector.
e. Cut the looped red cable above the coil in half. Bare back each end by 5mm and connect to the plug-in screw terminal block to the left of the six pin connector.

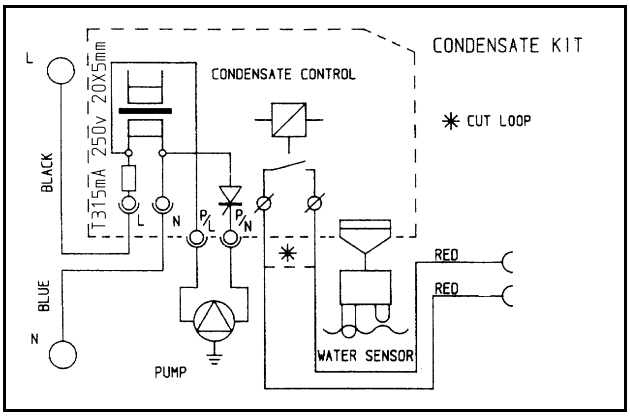

10. Fold the plastic sheet over the front of the control board and secure to the two pump leads, using a cable tie through both holes in the sheet.

11. TESTING THE PUMP AND CONTROL
a. Connect a suitably fused supply to the unit (refer to the unit installation instructions). Allow approximately one minute for the controls and sensor to stabilize.
b. Slowly add water to the condensate tray sump until the pump runs. Initially the pump will be noisy until the air in the hose has been expelled. It is possible that, on this first cycle, the pump will run dry for a short period (indicated by noise).
c. Add more water to the sump and the pump will cycle in the normal manner.
d. With the system in cooling mode, continue adding water to the sump until it reaches the higher of the sensor probes. The cooling cycle will shut down, and the pump continue to run, until the water has dropped below the level of this probe.

12. Refit the end panels by locating the end tabs into the front grille end slots and pivoting the box backwards. Secure by replacing the self tapping screws.

NOTE: Whenever the electrical supply to a unit fitted with a condensate pump and controls is interrupted, a delay of up to 1 minute will occur before the compressor or the pump will start when the supply is reinstated.

TROUBLE SHOOTING

Unit will not cool	No mains supply to the control board.
Pump does not run	Fuse on control board blown (315 mA x 20mm) Sensor disconnected from control board
Cooling is interrupted	Restriction in pump flow allowing level to rise and trip overflow circuit Check for blockage or kink in hoses. Condensate at high level -- tripping overflow circuit Filter blocked - Remove and clean
Excessive pump noise	Air leak in hoses and/or joints Pumping without water in sump -- control board fault Loose connection between sensor and control board Loose fuse, intermittent mains supply to control board Water syphoning due to lack of air break

APPLICATION NOTES

1. The pump will work against a 5m head. Flow rate is highest with minimum head.

2. Long lengths of drain pipe should not be exposed to the outdoor ambient, otherwise freezing of condensate may occur during winter operation.

3. It is not advisable to have the outlet of the drain well below the position of the pump, otherwise the syphon effect may open the pump valves.

4. For normal applications, i.e., where the drain is level or above the pump or within 3 feet below it, no extra check valves are needed; the pump has its own internal check valves.

5. Ensure that no hose is kinked, as this could seriously affect the pump performance.

6. Clean the filter at regular intervals.

-o-o-o-O-O-o-o-o-

FAULT FINDING

	CONDITION	POSSIBLE CAUSE	ACTION
A	Indoor fan motor will not run	No electric supply at socket or switched fuse box	Check fuse rating and replace if necessary. Check for loose electrical connections
		Unit wiring fault	Check wiring and connections
		Fan motor capacitor defective	Replace if faulty
		Fan motor defective	Replace if faulty
		Internal fuse(s) blown	Clear fault and replace fuse
B	Inadequate cooling or heating	Dirty evaporator fins/filter	Clean if blocked
		Evaporator motor not running	As in section A
		Refrigerant shortage or excess	Check for leaks. Repair, evacuate and recharge or check for high head pressure and recover refrigerant if necessary
		Faulty electronic controls	Replace if faulty
		Dirty condenser	Clean if necessary
		Faulty compressor	Replace
		LP cutout circuit open (if fitted)	Check as refrigerant shortage or excess
C	Compressor and outdoor fan motor will not run	LP cutout circuit open (if fitted)	Check as above
		No electric supply at socket or switch fuse box	Check fuse rating and replace if necessary. Check for loose electrical connection.
		Unit wiring fault	Check wiring and connections
		Capacitor, controls, contactor or overload defective	Replace if faulty
		Compressor failure	Replace if faulty
		Controls not set properly	Check and rectify
		Off cycle delay operating	If applicable, wait 3 minutes
		High condensate level detected	See G
D	System runs for long periods and will not cycle	Unit underrated for conditioned area	Check heat load against capacity
		Controls not operating correctly	Check wiring and operation
		Refrigerant shortage	Check for leaks. Recover, repair, evacuate and recharge
	Indoor coil dry or partly sweating	Dirty condenser	Clean fins if necessary
E	Indoor coil frosting	Refrigerant shortage	Check for leaks. Recover, repair, evacuate and recharge
		Dirty evaporator fins/filter	Clean if blocked
		Running in cool ambient without a head pressure controller	Fit head pressure controller
	If room temperature is also low	Controls set too low or cooling permanently	Reset or replace
F	Noisy unit	Fan fouling cowl (outdoor unit)	Realign fan
		Worn motor bearing	Replace motor
		Casing or piping vibration	Check cause and rectify
		Loose parts or mounting	Find and tighten
		Bent fan blade	Replace fan
G	Water leaking from unit Units with condensate pump	Blocked drain	Clear obstruction
		No supply to pump or loose connection	Secure the supply
		Fouled sensor	Clean sensor
		Pumping slowly	Check drain pipes; if clear, replace pump
		Pump windings shorted	Replace pump
H	Pump always runs	Faulty sensor or pcb	Replace sensor or pcb
I	No heating	Controls not set for heating	Reset
		Unit wiring fault	Check wiring and connections
		Dirty evaporator fins/filter	Clean
		Faulty controls	Check for signal; replace if faulty
		Faulty heater element/element not fitted	Replace
		Faulty heater cutout	Replace, (check for short circuiting)
		Reversing valve jammed	A light tap may free it; preferably replace
J	Overload tripped on three phase units	High voltage supply	Max rated voltage 254v -- check supply
		Compressor failure	Replace
		Fuses blown	Replace fuses and investigate reason for fuses blowing
K	Outdoor unit does not operate	No mains supply	Check fuse rating and replace. Check for loose electrical connections
		Supply below 187v	Check supply
		Isolator off	Turn isolator on
		Internal fuse blown	Check fuse and replace
		No command signal	Check indoor unit
		Off cycle delay operating	Wait in cooling for 3 minutes
Check no alarms exist			
	If NO external connections are made to alarm terminal 5, the presence of an alarm condition can be tested for by checking for mains voltage at terminal 5; full mains voltage = Alarm; less than mains voltage = Clear.		
The outdoor unit can be caused to operate for test purposes by temporarily linking live directly to terminal 3 (up to 20 seconds delay)			

L	Outdoor unit runs continually at high speed	Charge link still fitted	Remove charge link
		HPUL in heating	Normal
		Minimum speed adjustment set too high	Reset minimum speed
If all external devices test O.K. the outdoor unit pcb must be replaced			
M	No LED's lit or flashing	Unit commanded to be OFF	Transmit 'ON'
		No mains supply or internal fuse blown. (Fuse F2 on internal control board blown during configuring)	Check electrical supply and fuses
		Fan motor plug disconnected	Reconnect fan motor plug
		Motor internal thermal protector operated	Check motor and rectify
		Cables to fascia not connected	Reconnect
		Circuit board fault	Check circuit board and replace
		High water level	Check pump circuit (if fitted)
N	All LED's lit, one flashing	Temperature sensor problem	See table below
		Resistor problem (non HPUL)	Check resistor connected
		Outdoor sensor problem (HPUL)	Replace outdoor unit sensor/check interconnecting wiring
P	Indoor unit continues after stop/off command	NORMAL: Overrun of 30 seconds in heating	
Q	Unit will not respond to infrared commands. No audible answer signal	Battery discharged	Replace battery
		Handset corrupted	Reset
R	Unit does not switch on/off at intended times	Power cut has occurred	Send any command from the handset to synchronise the timer
S	Unit not running in intended mode/temperature	Power has been shut off for three or more days, unit is exercising default programme	Use handset retransmit button
T	Fan does not run at the intended speed	Heat Pumps Only	Fan runs at low speed until indoor coil is warm, then changes to intended speed
U	Short cycles between cool and heat	System oversized for room	Use cool or heat programmes NOT 'Auto'
V	First operation, room is overcooled or overheated by 2°C	Set point temperature reverts to normal after deadband is reached or 20 minutes of operation	Normal
W	Handset will not transmit	Heating commands	Incorrectly configured
		Any commands	Battery flat
X	Compressor runs on	Automatic minimum run time of 1.5 minutes	Normal
If problems are encountered check the battery and connections. If the handset fails to respond to button operations, disconnect and then reconnect the battery. The previous programme state is retained in the memory for a few seconds provided none of the user buttons are pressed.			

DISPLAYS/DIAGNOSTICS

Cool ❄ Green	Dry 💧 Red	Fan ✿ Red	Heat ☀ Amber	DIAGNOSTICS
OFF	OFF	OFF	OFF	No power, manual OFF, timed OFF, condensate high level, fault in condensate
ON	OFF	OFF	OFF	Cooling mode selected
ON	OFF	OFF	BLINKS	AUTO - predominantly cooling
OFF	OFF	OFF	ON	Heating mode selected
BLINKS	OFF	OFF	ON	AUTO - predominantly heating
OFF	OFF	ON	OFF	Fan mode selected
OFF	ON	OFF	OFF	Dry mode selected
OFF	OFF	OFF	BLINKS	Outdoor unit defrosting

Diagnostics

BLINKS x 4	OFF	OFF	OFF	Room sensor missing
BLINKS x 4	OFF	OFF	OFF	Indoor coil sensor missing
BLINKS x 4	BLINKS	OFF	OFF	Outdoor coil sensor missing
BLINKS x 1	OFF	BLINKS	OFF	Compressor overload
BLINKS x 2	OFF	BLINKS	OFF	Pump fault

EXPLODED DIAGRAM OF IMPACT-L WITH COMPONENT IDENTIFICATION (IMPACT-L 40 SHOWN)

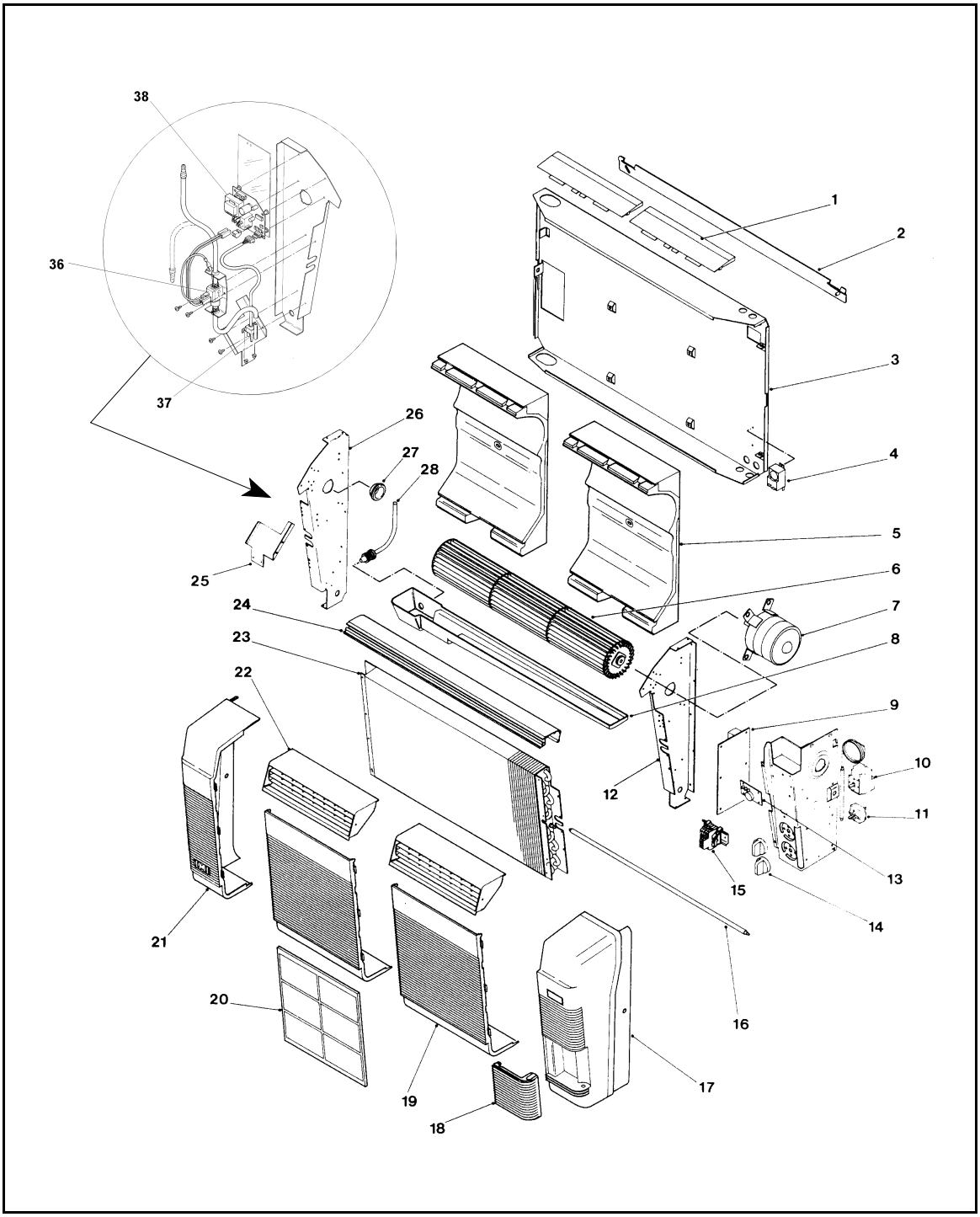

1	Top cover plate	15	Terminal assembly	29	Heater cutout assembly
2	Wall mounting bracket	16	Heater element	30	Electrics plate
3	Back panel	17	Right hand end cover	31	Capacitor
4	De-ice thermostat	18	Right hand door	32	Blank cover (not applicable)
5	Polystyrene scroll	19	Front cover	33	LED cover (electronic)
6	Impeller	20	Filter	34	De-ice sensor (Electronic)
7	Motor	21	Left hand end cover	35	Return air sensor (Electronic)
8	Drip tray assembly	22	Top box assembly	36	Condensate pump
9	Power board (electronic)	23	Coil and header	37	Condensate pump sensor
10	Thermostat (not applicable)	24	Extrusion	38	Condensate pump PCB
11	Rotary switch(not	25	Drip deflector		Remote controller (not shown)
12	Right hand coil bracket	26	Left hand coil bracket		2 Amp fuse (not shown)
13	Receiver board (electronic)	27	Rubber housing		Heater relay (not shown)
14	Rotary knob	28	Impeller spring		

MCU(+) 15 - 100/MHPUL 15 - 90 COMPONENT IDENTIFICATION

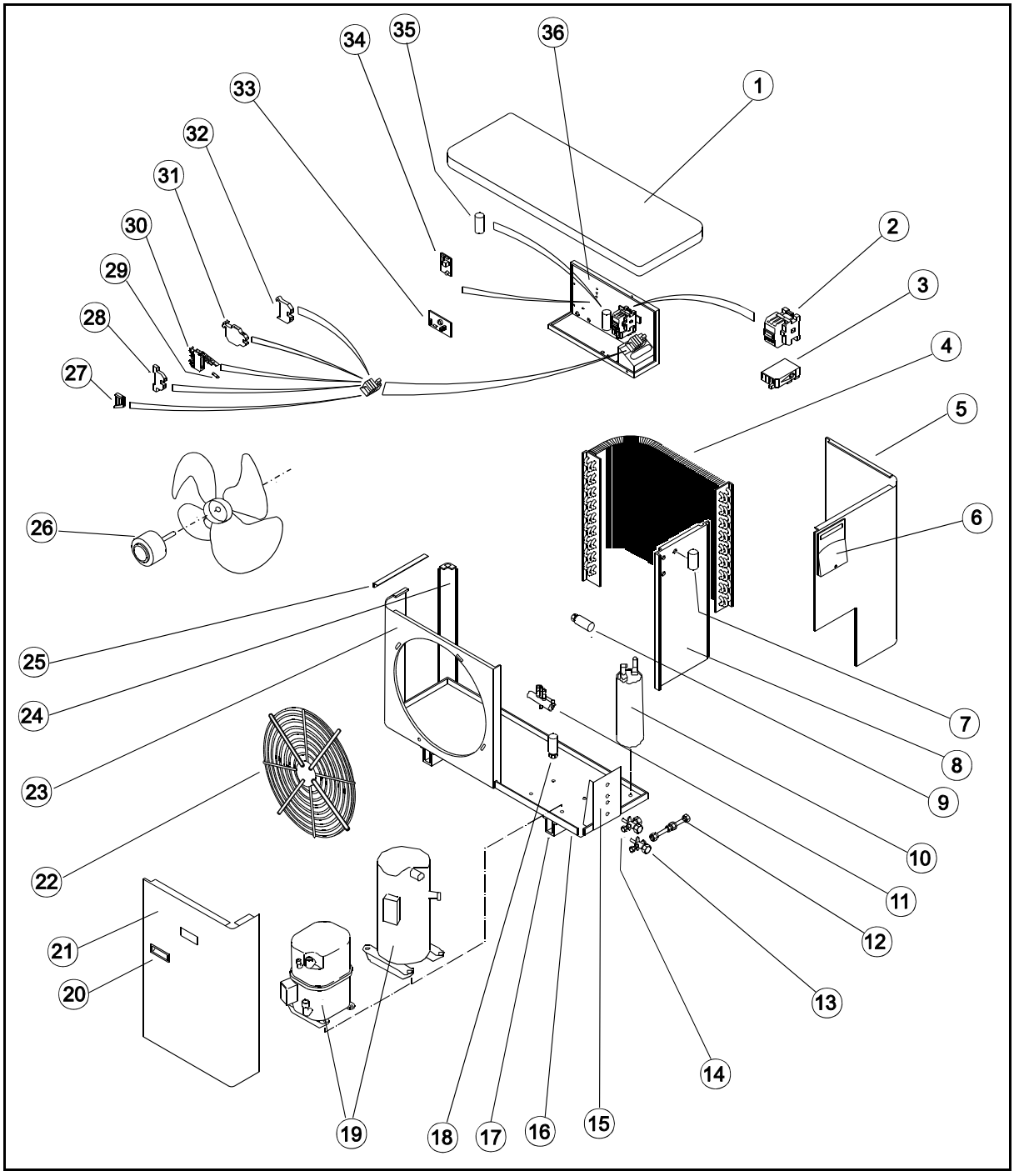

1	Lid
2	Contactor
3	Overload
4	Heat exchanger
5	Rear access panel
6	Mains terminal cover
7	Fan capacitor
8	Bulkhead panel
9	HP switch (manual, option)
10	Suction accumulator (MHPUL,)
11	Reversing valve (MHPUL)
12	Expansion assy (inc. restrictor)

13	Service valve (liquid)
14	Service valve
15	Valve panel
16	Base
17	Mounting foot
18	LP switch
19	Compressor
20	Handle
21	Front access panel
22	Fan guard
23	Fascia panel
24	Corner panel

25	Support bracket
26	Fan / motor assy
27	End clamp
28	Terminal (screw - screw)
29	Fuse
30	Fuse terminal
31	Terminal (4 way)
32	Earth terminal
33	Head pressure control pcb (MCU+
34	3 minute timer pcb (MCU+ MHPUL)
35	Compressor capacitor
36	Electrics box

DCUE COMPONENT IDENTIFICATION

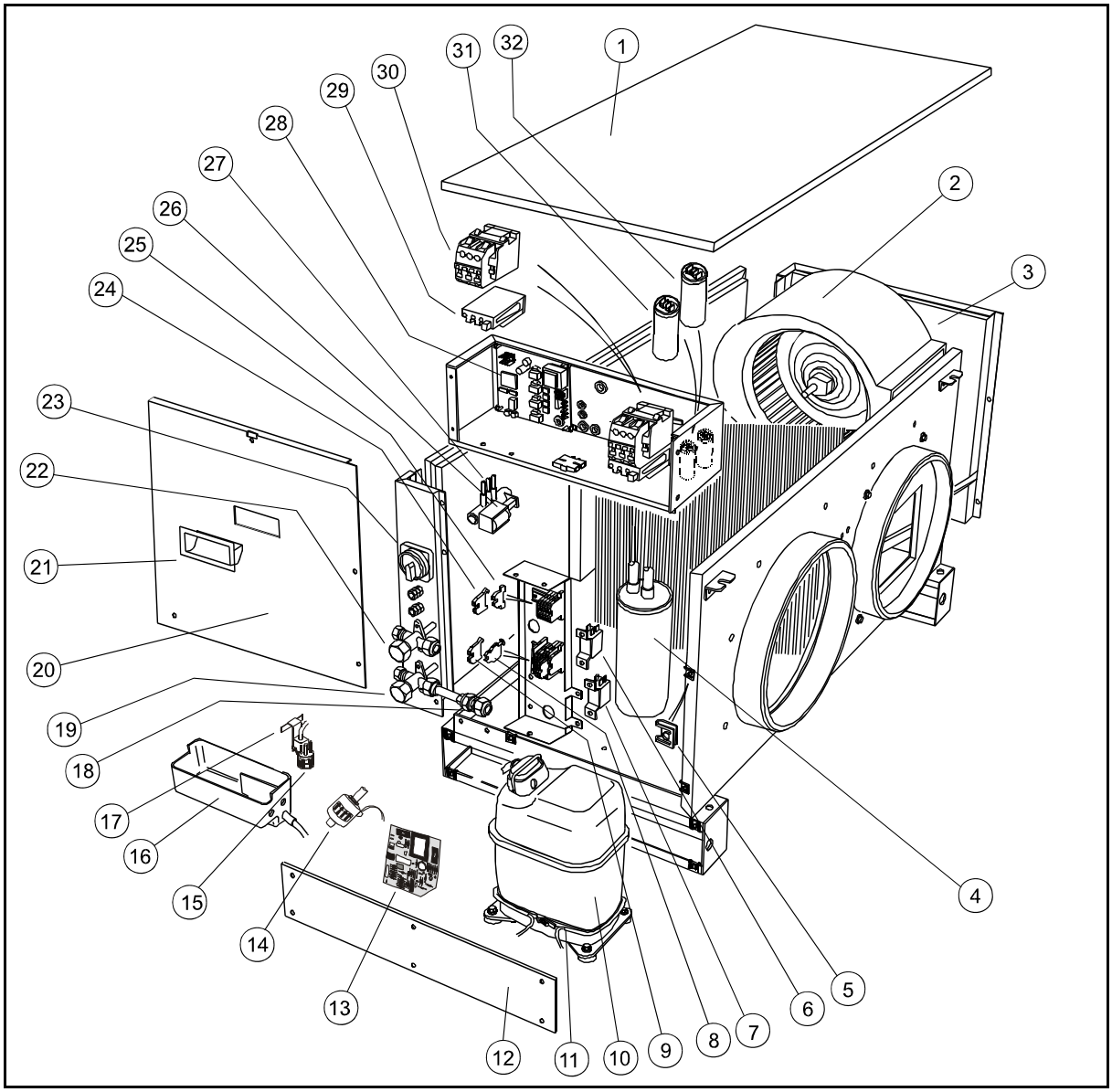

1	Lid
2	Fan assembly
3	Panel right hand access
4	Accumulator
5	Spire c lip
6	Switch LP auto
7	Switch HP auto
8	Terminal 4 way
9	Terminal fused
10	Compressor
11	Crankcase heater
12	Cover sump housing
13	Condensate pump pcb
14	Condensate pump
15	Filter
16	Condensate sump

17	Water level sensor
18	Expansion assembly
19	Service valve
20	Panel electrics access
21	Handle
22	Service valve
23	Isolator
24	End clamp
25	Terminal
26	Reversing valve (DHPUE)
27	Solenoid
28	Power board
29	Overload (3ph)
30	Contactor
31	Fan capacitor
32	Compressor capacitor (1ph)